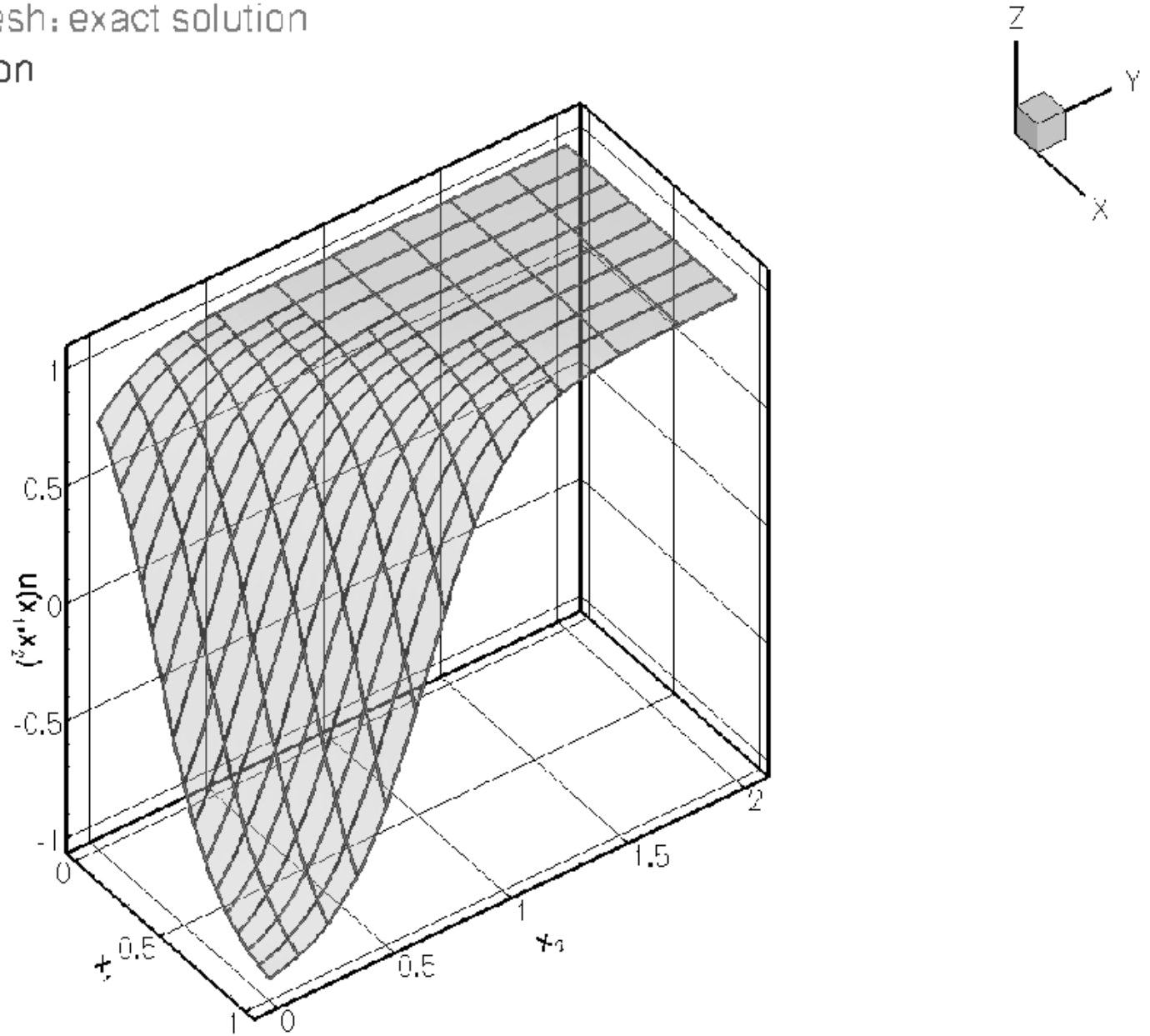Shade and green mesh: exact solution
Red mesh: FE solution