Shade and green mesh: exact solution
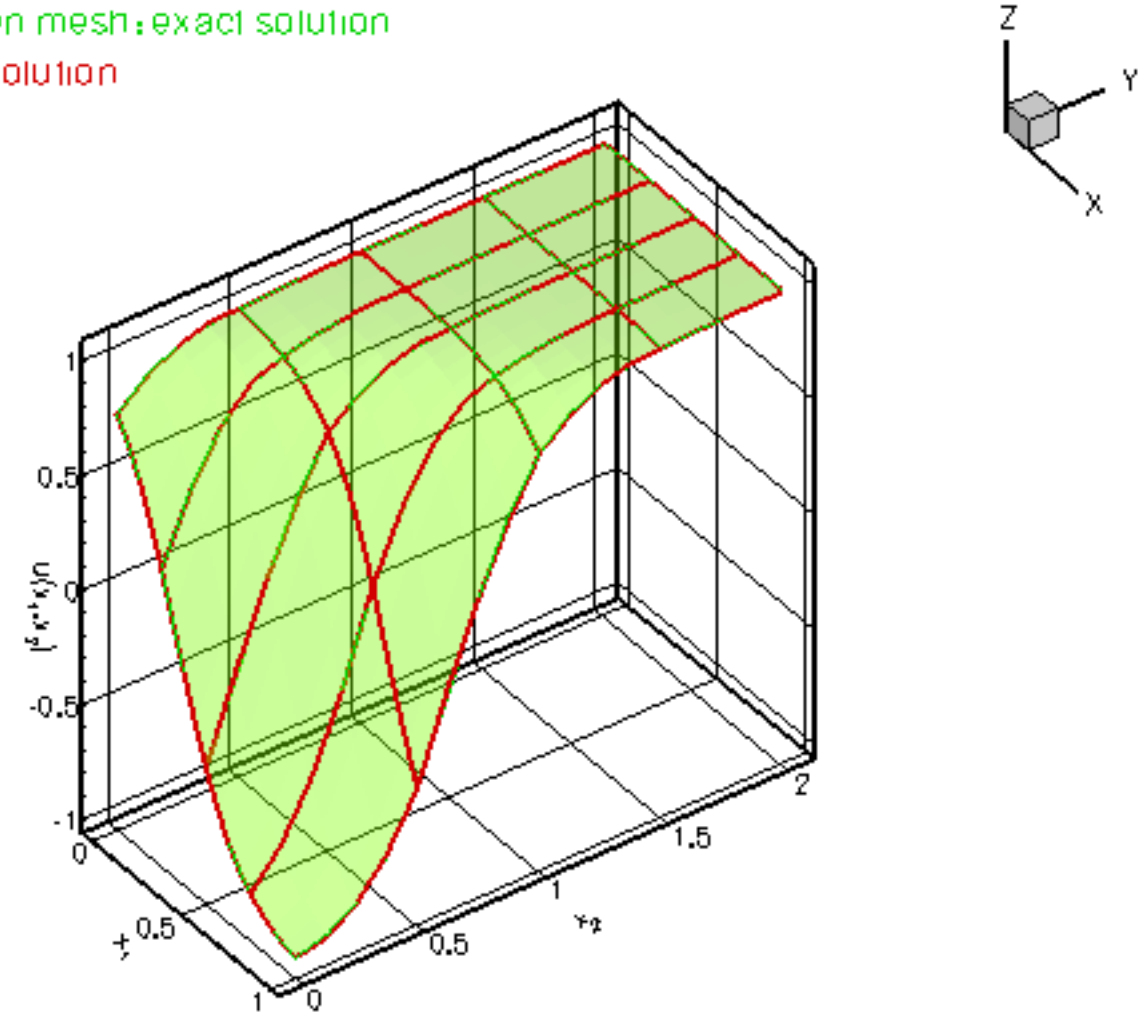
Red mesh: FE solution