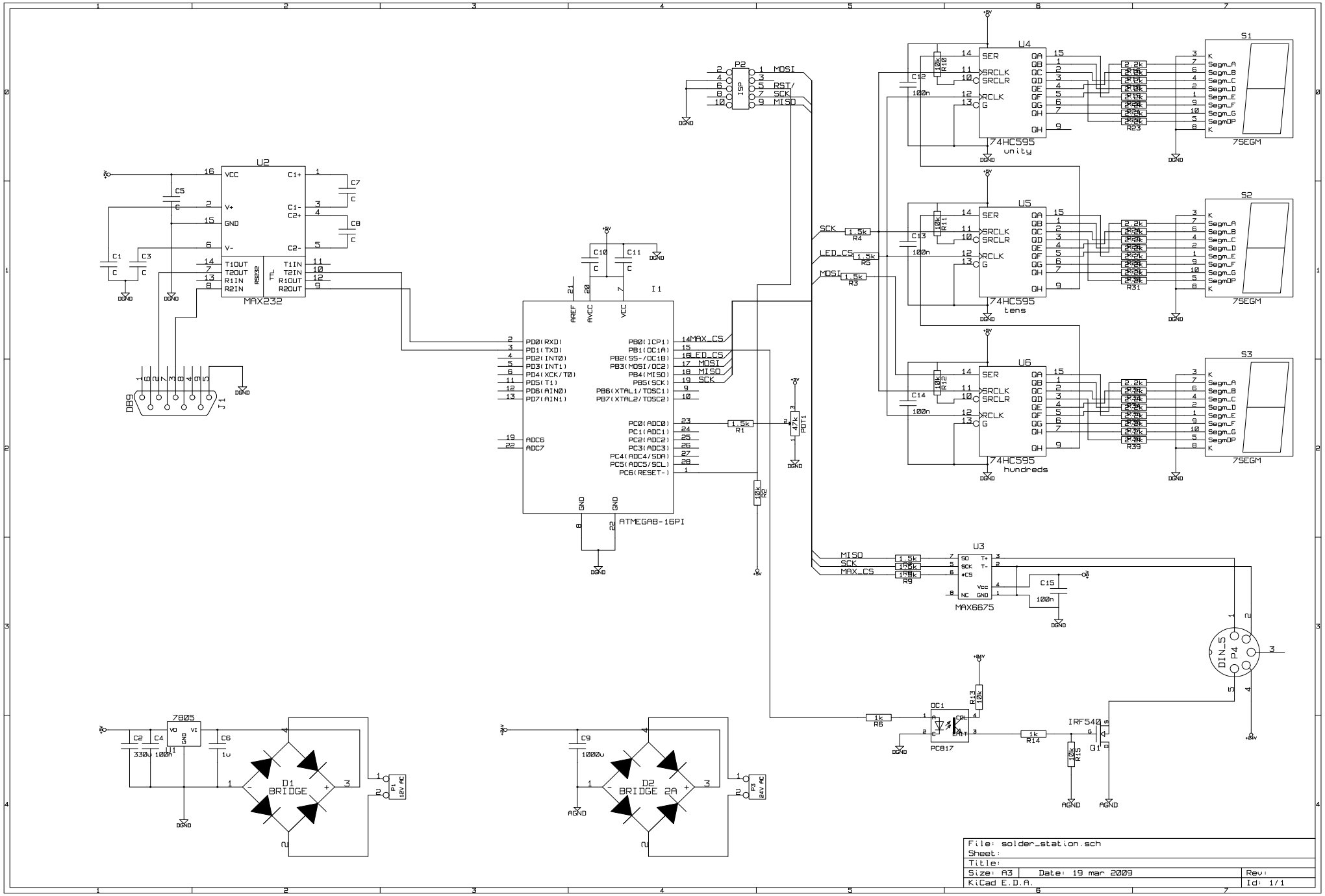
U2
MAX232
VCC
V+
GND
V-
C1+
C1-
C2+
C2-
T1OUT
T2OUT
R1IN
R2IN
T1IN
T2IN
R1OUT
R2OUT
RS232
TTL
C1
C2
C3
C4
C5
C6
C7
C8
DB9
J1
P2
ISP
MOSI
RST/
SCK
MISO
I1
ATMEGA8-16PI
AREF
AVCC
VCC
PD0(RXD)
PD1(TXD)
PD2(INT0)
PD3(INT1)
PD4(XCK/T0)
PD5(T1)
PD6(AIN0)
PD7(AIN1)
PB0(ICP1)
PB1(OC1A)
PB2(SS-/OC1B)
PB3(MOSI/OC2)
PB4(MISO)
PB5(SCK)
PB6(XTAL1/TOSC1)
PB7(XTAL2/TOSC2)
PC0(ADC0)
PC1(ADC1)
PC2(ADC2)
PC3(ADC3)
PC4(ADC4/SDA)
PC5(ADC5/SCL)
PC6(RESET-)
ADC6
ADC7
MAX_CS
LED_CS
MISO
SCK
R1
R2
POT1
U4
U5
U6
74HC595
unity
tens
hundreds
SER
SRCLK
SRCLR
RCLK
G
QA
QB
QC
QD
QE
QF
QG
QH
S1
S2
S3
7SEGM
Segm_A
Segm_B
Segm_C
Segm_D
Segm_E
Segm_F
Segm_G
SegmDP
K
R4
R5
R3
R23
R31
R39
U3
MAX6675
SO
SCK
*CS
Vcc
GND
NC
T+
T-
C15
100n
DIN_5
P4
OC1
PC817
R13
10k
R6
1k
R14
IRF540
Q1
R15
10k
7805
VO
VI
GND
C2
330u
C4
100n
C6
1u
D1
BRIDGE
P1
12V AC
C9
1000u
D2
BRIDGE 2A
P3
24V AC
DGND
AGND
File: solder_station.sch
Sheet:
Title:
Size: A3
Date: 19 mar 2009
Rev:
KiCad E.D.A.
Id: 1/1