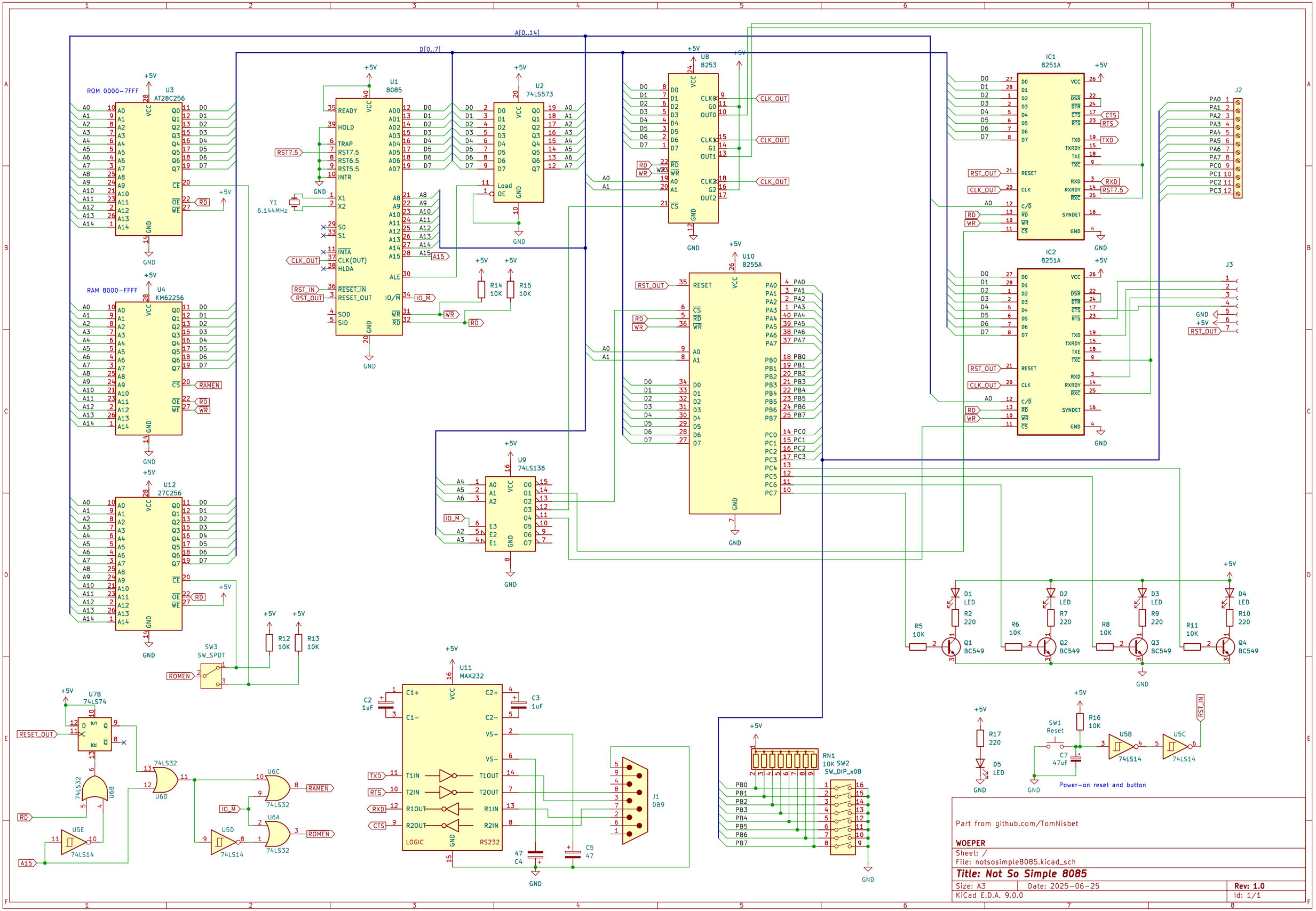
A[0..14]
D[0..7]
ROM 0000-7FFF
U3
AT28C256
RAM 8000-FFFF
U4
KM62256
U12
27C256
U1
8085
U2
74LS573
U8
8253
U10
8255A
U9
74LS138
IC1
8251A
IC2
8251A
J2
J3
Y1
6.144MHz
R14
10K
R15
10K
R12
10K
R13
10K
SW3
SW_SPDT
ROMEN
RAMEN
U7B
74LS74
U6B
74LS32
U6D
U6C
U6A
U5D
U5E
74LS14
U11
MAX232
C2
1uF
C3
1uF
C4
47
C5
47
J1
DB9
RN1
10K SW2
SW_DIP_x08
D1
LED
R2
220
D2
LED
R7
220
D3
LED
R9
220
D4
LED
R10
220
R5
10K
R6
10K
R8
10K
R11
10K
Q1
BC549
Q2
BC549
Q3
BC549
Q4
BC549
R17
220
D5
LED
SW1
Reset
R16
10K
C7
47uF
U5B
U5C
Power-on reset and button
Part from github.com/TomNisbet
WOEPER
Sheet: /
File: notsosimple8085.kicad_sch
Title: Not So Simple 8085
Size: A3
Date: 2025-06-25
Rev: 1.0
KiCad E.D.A. 9.0.0
Id: 1/1