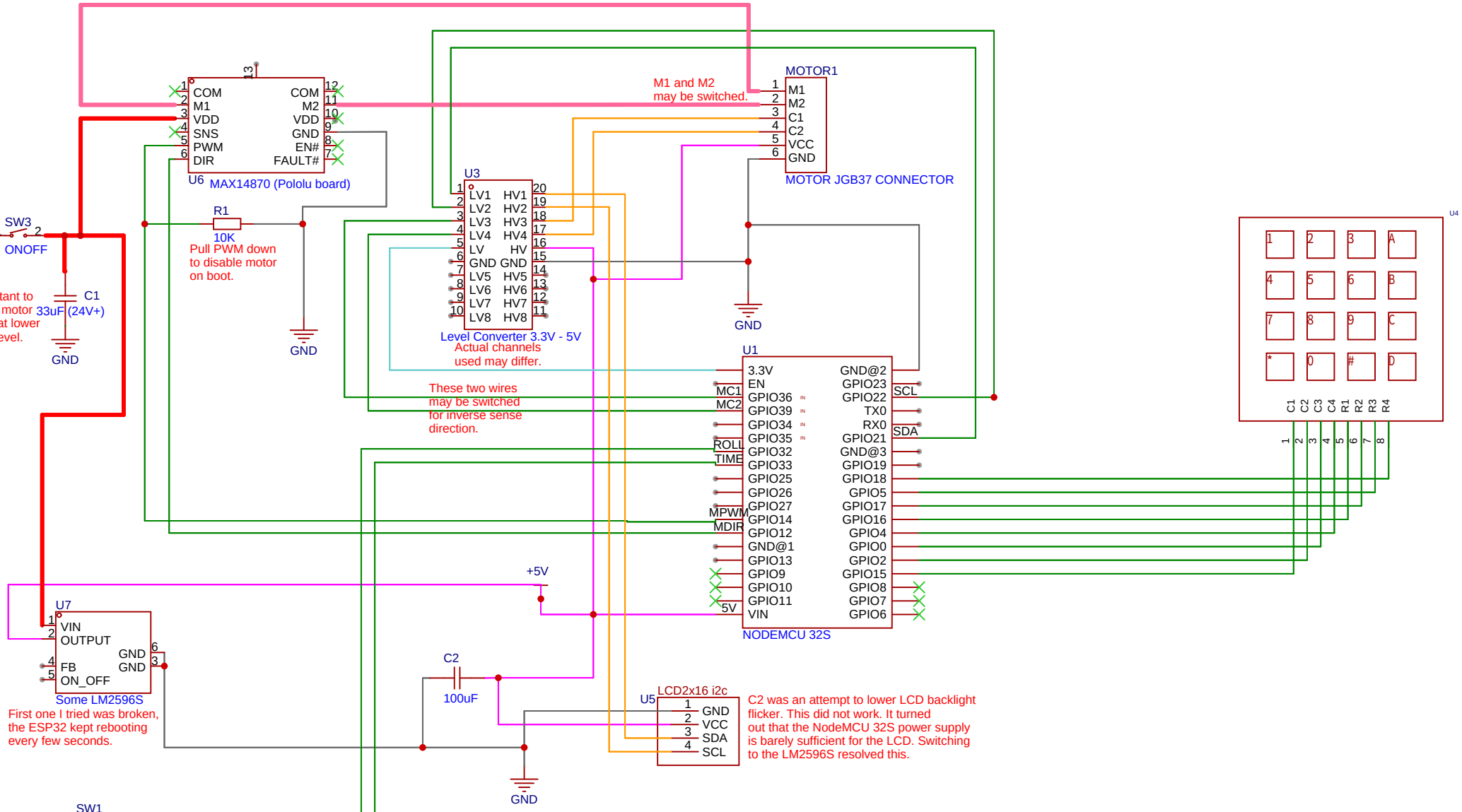

Schematic	github.com/wojas/filmprocessor	Create at	2025-09-29
		Update at	2025-10-20
Board	Board1	Page	P1
Drawn		Film Processor	
Reviewed			
		Version	Size	Page 1 Total 1
EasyEDA		V1.0	A4	