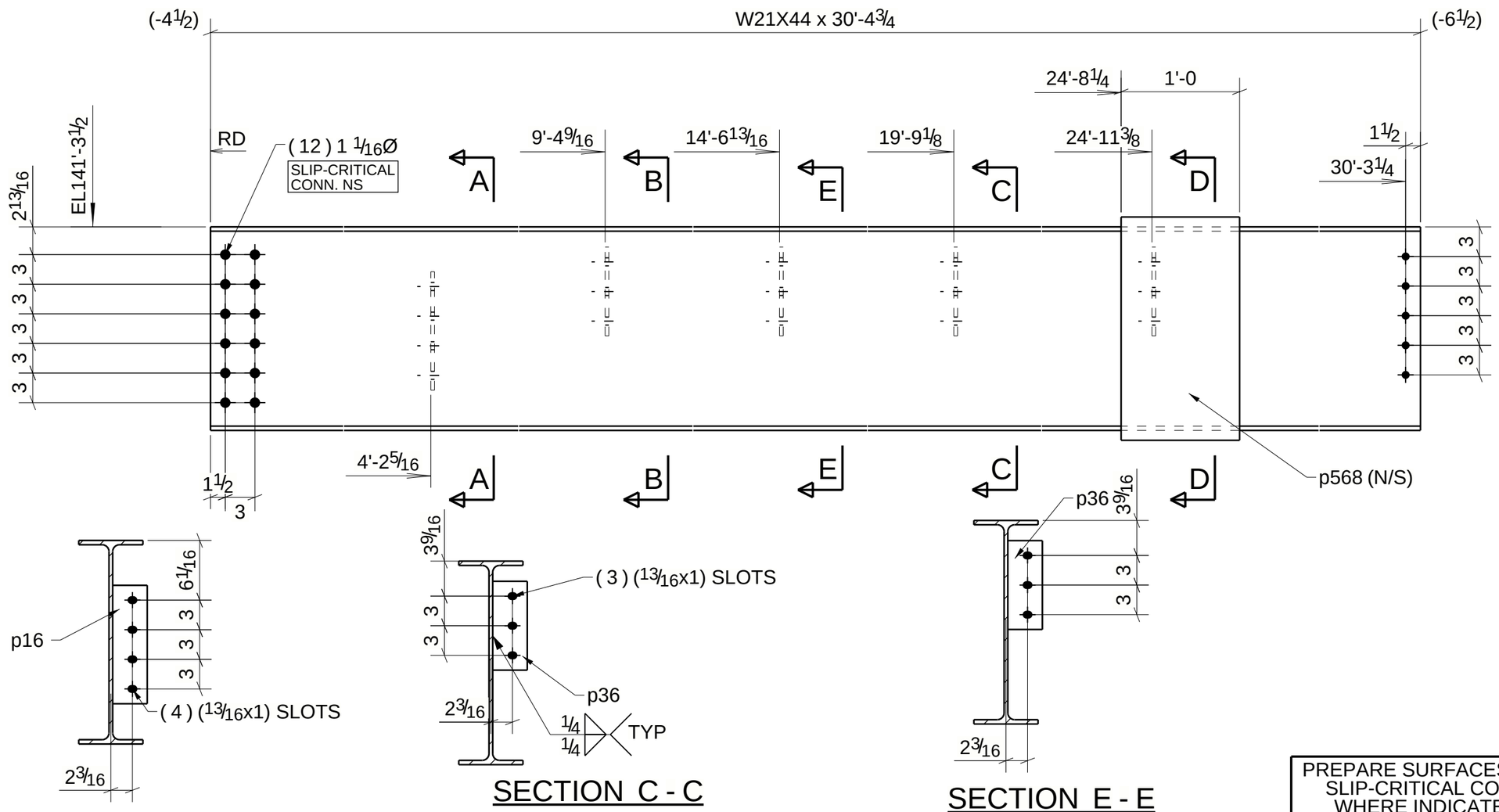

SECTION A - A

SECTION C - C

SECTION E - E

ONE - BEAM - 20B104

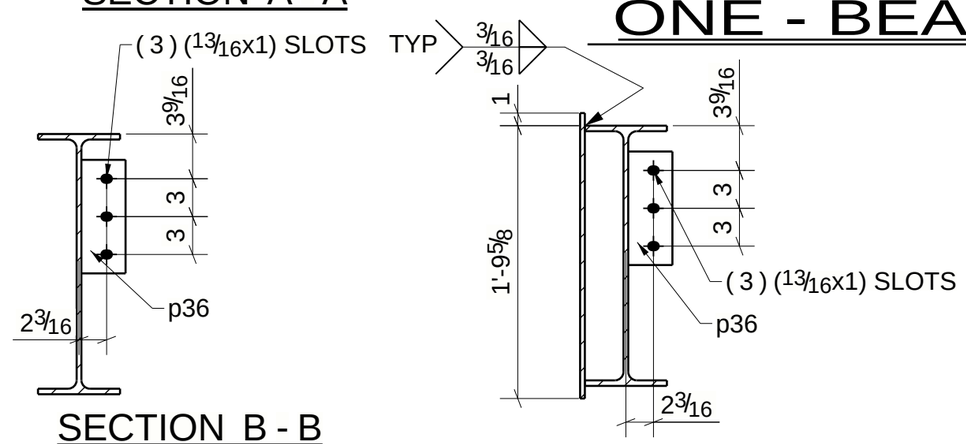

SECTION B - B

SECTION D - D

PREPARE SURFACES FOR SLIP-CRITICAL CONN. WHERE INDICATED. DO NOT PAINT AREAS OF SC CONNECTION.

BILL OF MATERIAL

SEQ	SHIPPING BILL NO. Pcs.	SHIPPING BILL ERECTION MARK	SHOP BILL NO.	SHAPE	MATERIAL GRADE	LENGTH	ASSY. MARK	REMARKS	WEIGHT
20	1	20B104		BEAM				SQ-2	
			1	W21X44	A992	30-4 3/4	20B104	Red 220R-345	1345
			1	PL3/8"X3 1/2"	A36	1-0	p16		4
			4	PL3/8"X3 1/2"	A36	0-9	p36		13
			1	PL3/8"X12"	A36	1-10 5/8	p568		29
			5	3/4Ø A325N_TC BOLT		0-2		Site	
			12	1Ø A325SC_TC BOLT		0-2 1/2		Site	
								TOTAL WEIGHT THIS DRAWING	1392

REF. NUMBER
ABM300

REV #	DATE	DESCRIPTION
A	10/03/2022	ISSUED FOR APPROVAL

REVISION AND ISSUE RECORD

PROJECT WACO HIGH SCHOOL
LOCATION 2020 N 42nd St, Waco, TX 76710
CUSTOMER Rogers O'Brien Const Co Inc
ARCH/ENG O'CONNELL ROBERTSON

ALAMO STRUCTURAL STEEL
2784 OLD DALLAS RD.
WACO, TEXAS 76705
PHONE: 254 799 2471
FAX: 254 799 6227

FIELD CONN (U.N.)	HOLES (U.N.)	
3/4 A325N_TC	13/16"	
SURFACE PREP	SHOP PAINT	
SSPC-SP2	Red 220R-345	
DATE	DET	CHK
10/03/2022	MJC	AJM
JOB NO.	DRAWING NO.	
32-22017	20B104	

Tekla Structures