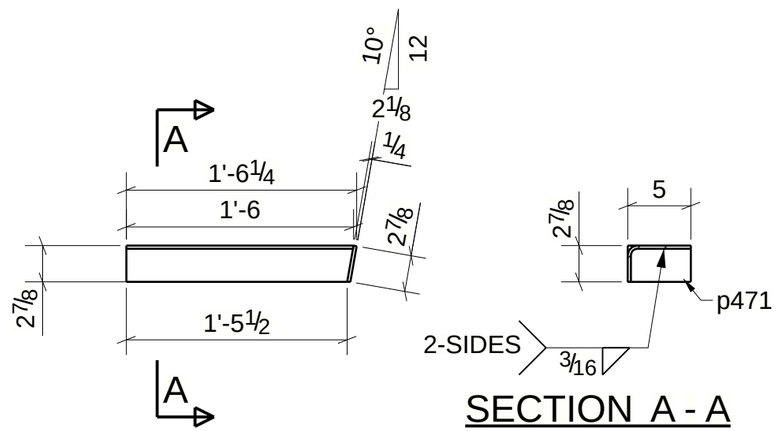

SECTION A - A

ONE - BENT PLATE - 20M140

BILL OF MATERIAL

SEQ	SHIPPING BILL NO. Pcs.	SHIPPING BILL ERECTION MARK	SHOP BILL NO.	SHAPE	MATERIAL GRADE	LENGTH	ASSY. MARK	REMARKS	WEIGHT
20	1	20M140		BENT PLATE				SQ-2	
			1	BPL1/4"X7 3/8"	A36	1-6	20M140	Red 220R-345	9
			1	PL1/4"X2 15/16"	A36	0-5	p471		1
								TOTAL WEIGHT THIS DRAWING	10

REV #	DATE	DESCRIPTION
A	10/04/2022	ISSUED FOR APPROVAL

REVISION AND ISSUE RECORD

PROJECT WACO HIGH SCHOOL
LOCATION 2020 N 42nd St, Waco, TX 76710
CUSTOMER Rogers O'Brien Const Co Inc
ARCH/ENG O'CONNELL ROBERTSON

ALAMO STRUCTURAL STEEL
2784 OLD DALLAS RD.
WACO, TEXAS 76705
PHONE: 254 799 2471
FAX: 254 799 6227

FIELD CONN (U.N.)	HOLES (U.N.)
3/4 A325N_TC	13/16"
SURFACE PREP	SHOP PAINT
SSPC-SP2	Red 220R-345

DATE	DET	CHK
10/04/2022	RFW	AJM

JOB NO.	DRAWING NO.
32-22017	20M140

Tekla Structures