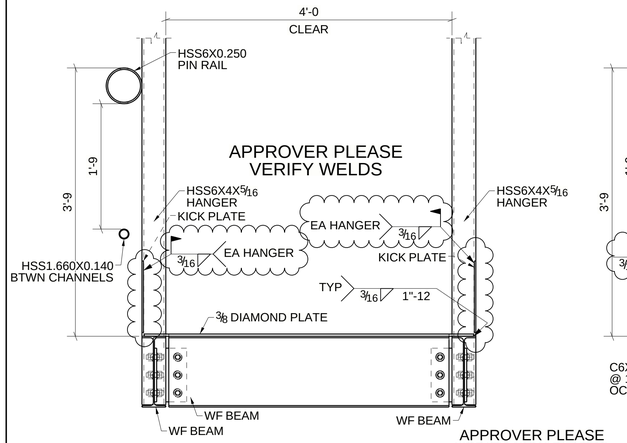

1 SECTION
REF.: 2/S5.61

APPROVER PLEASE VERIFY KICK PLATES LOCATION (FLUSH WITH THE OUTSIDE OF HANGERS)

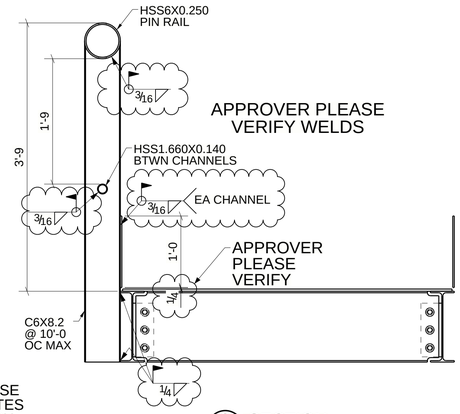

2 SECTION
REF.: 4/S5.61

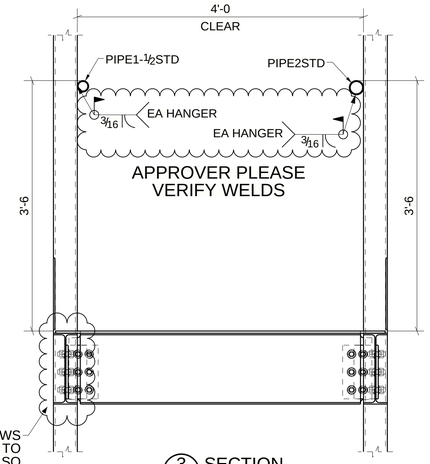

SECTION 1/S5.61 SHOWS WF BEAM IS WELDED TO HANGER BUT ALSO SHOWS SHEAR PL CONNECTION. PLEASE VERIFY WHICH ONE IS CORRECT.

3 SECTION
REF.: 1/S5.61

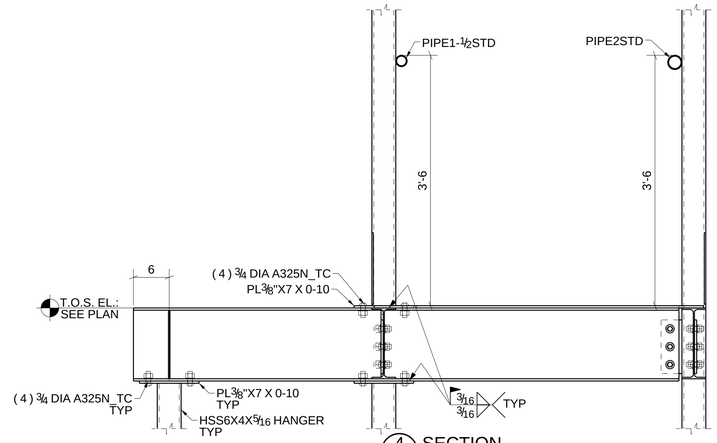

4 SECTION
REF.: 7/S5.61

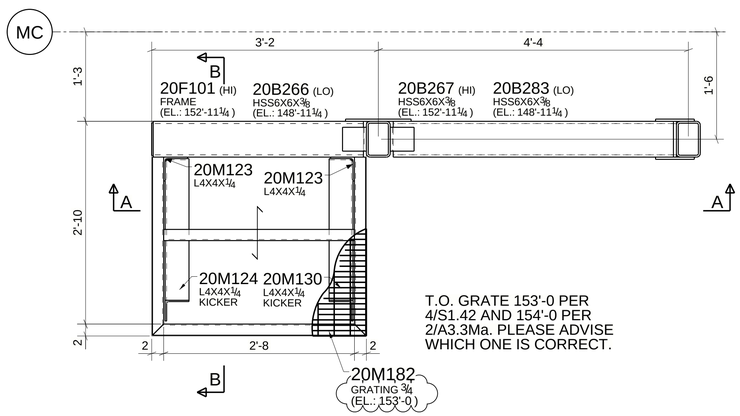

T.O. GRATE 153'-0 PER 4/S1.42 AND 154'-0 PER 2/A3.3Ma. PLEASE ADVISE WHICH ONE IS CORRECT.

5 DETAIL
REF.: 4/S1.42

PLEASE VERIFY IF IT IS ACCEPTABLE TO ROTATE CHANNEL TOE OUTSIDE TO ALLOW WELDING OF HIRIZONTAL ANGLE AND KICKER.

MOMENT CONN. PLATE CLASHES WITH GRATING. PLEASE VERIFI IF IT IS ACCEPTABLE TO CUT GRATING AROUND PLATE

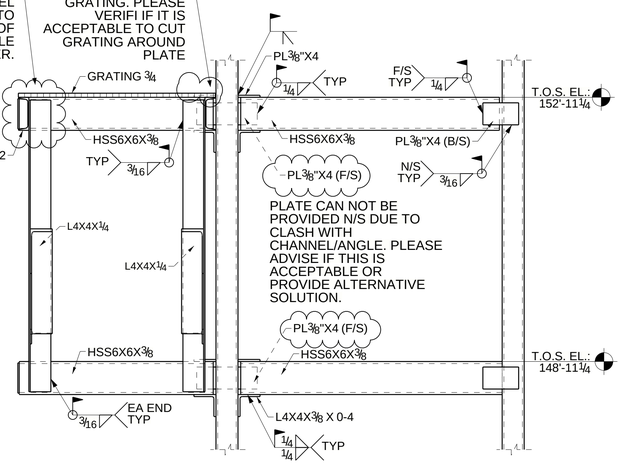

SECTION A - A

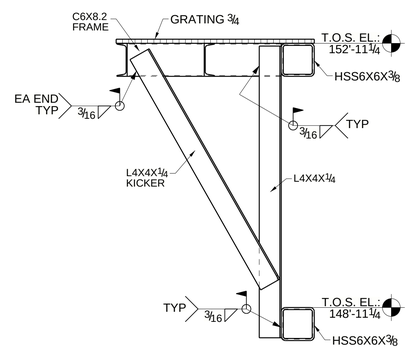

SECTION B - B

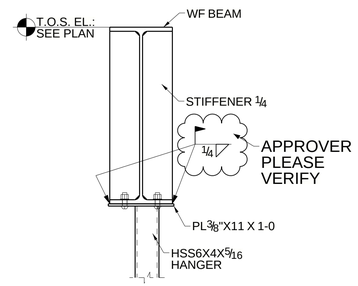

6 SECTION

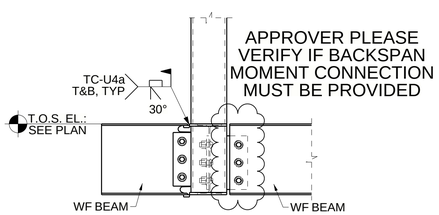

APPROVER PLEASE VERIFY IF BACKSPAN MOMENT CONNECTION MUST BE PROVIDED

7 SECTION

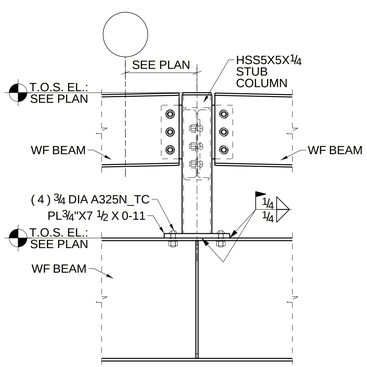

8 SECTION

APPROVER PLEASE VERIFY SOLUTION

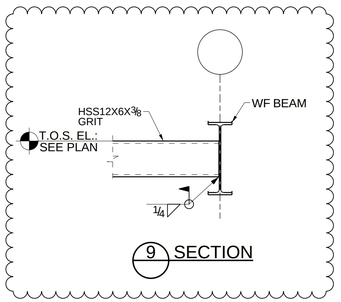

9 SECTION

REV.	DATE	DESCRIPTION
A	10/04/2022	ISSUED FOR APPROVAL

REVISION AND ISSUE RECORD

ALAMO STRUCTURAL STEEL
2784 OLD DALLAS RD.
WACO, TEXAS 76705
PHONE: 254 799 2471
FAX: 254 799 6227

PROJECT WACO HIGH SCHOOL
CUSTOMER Rogers O'Brien Const Co Inc
LOCATION 2020 N 42nd St, Waco, TX 76710
ARCH/ENG O'CONNELL ROBERTSON
DETAILS SECTIONS

DETAILER WKB DATE 10/04/2022
CHECKER AJM DATE 10/04/2022
PM Dwayne Reed

JOB NO. 32-22017
DRWG. NO. E-3.20.2

Tekla Structures