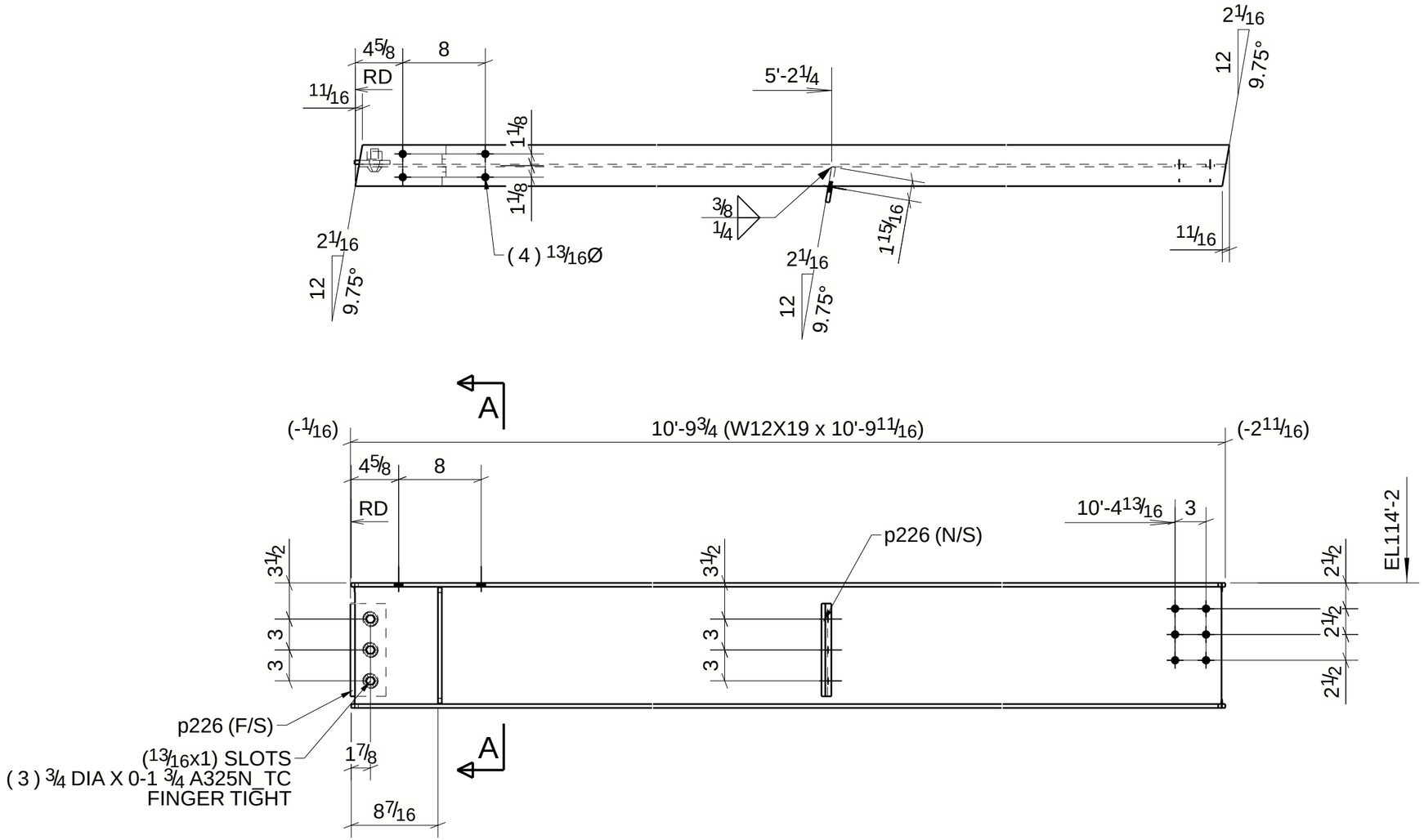

ONE - BEAM - 20B171

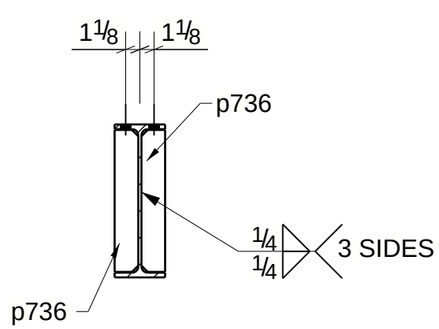

SECTION A - A

BILL OF MATERIAL

SEQ	SHIPPING BILL NO. Pcs.	SHIPPING BILL ERECTION MARK	SHOP BILL NO.	SHAPE	MATERIAL GRADE	LENGTH	ASSY. MARK	REMARKS	WEIGHT
20	1	20B171		BEAM				SQ-2	
			1	W12X19	A992	10-9 11/16	20B171	Red 220R-345	205
			2	PL3/8"X3 7/16"	A36	0-9	p226		7
			2	PL3/8"X1 7/8"	A36	0-11 1/4	p736		4
			3	3/4Ø A325N_TC BOLT		0-1 3/4		Workshop	2
			6	3/4Ø A325N_TC BOLT		0-1 3/4		Site	
			4	3/4Ø A307 BOLT		0-2		Site	
								TOTAL WEIGHT THIS DRAWING	218

REF. NUMBER
ABM781

REV #	DATE	DESCRIPTION
A	10/03/2022	ISSUED FOR APPROVAL

REVISION AND ISSUE RECORD

PROJECT WACO HIGH SCHOOL
LOCATION 2020 N 42nd St, Waco, TX 76710
CUSTOMER Rogers O'Brien Const Co Inc
ARCH/ENG O'CONNELL ROBERTSON

ALAMO STRUCTURAL STEEL
2784 OLD DALLAS RD.
WACO, TEXAS 76705
PHONE: 254 799 2471
FAX: 254 799 6227

FIELD CONN (U.N.)	HOLES (U.N.)
3/4 A325N_TC	13/16"
SURFACE PREP	SHOP PAINT
SSPC-SP2	Red 220R-345

DATE	DET	CHK
10/03/2022	MJC	AJM

JOB NO.	DRAWING NO.
32-22017	20B171

Tekla Structures