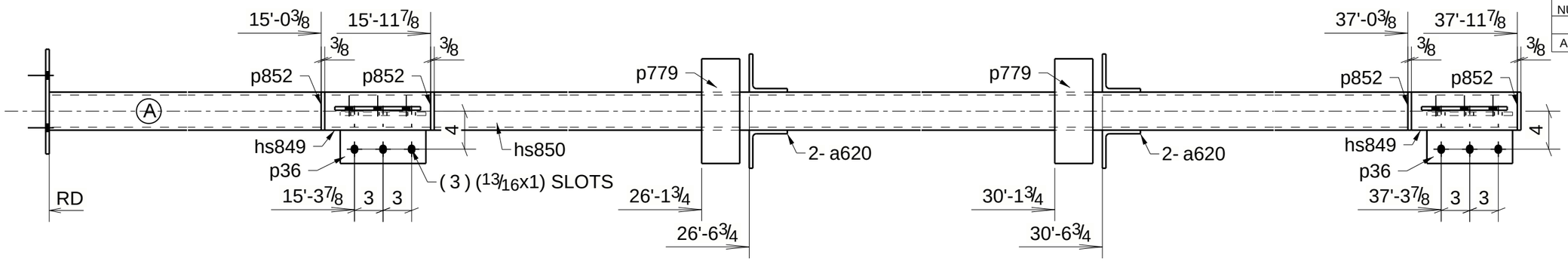

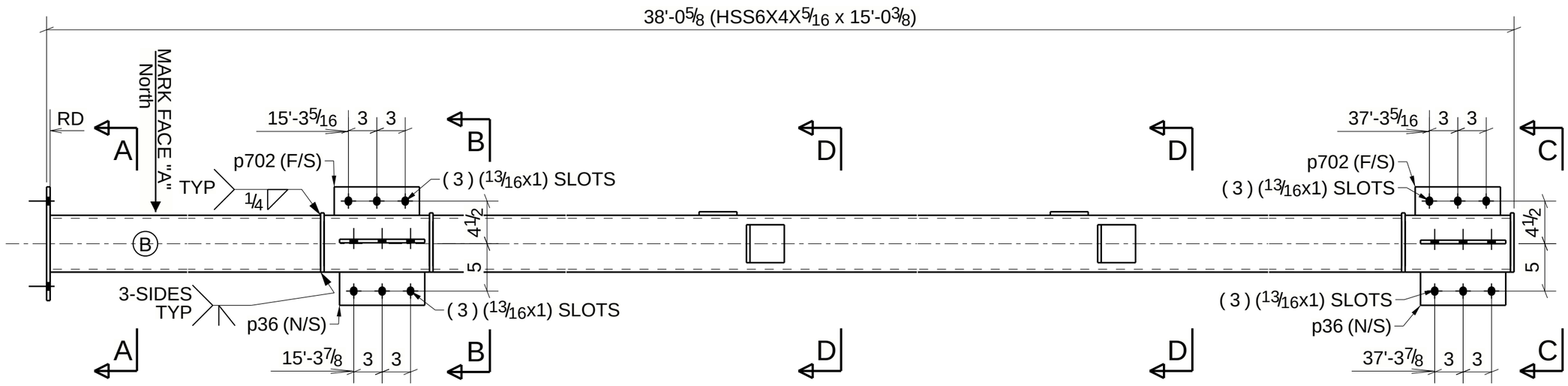

ONE - HANGER - 20M158

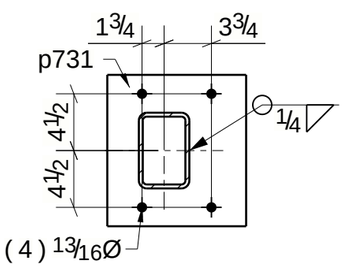

SECTION A - A

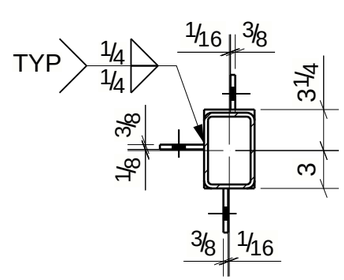

SECTION B - B

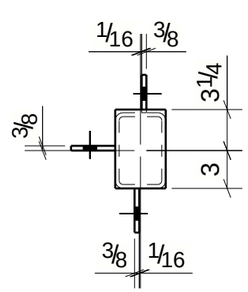

SECTION C - C

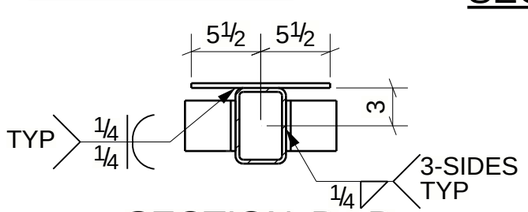

SECTION D - D

BILL OF MATERIAL

SEQ	SHIPPING BILL NO. Pcs.	SHIPPING BILL ERECTION MARK	SHOP BILL NO.	SHAPE	MATERIAL GRADE	LENGTH	ASSY. MARK	REMARKS	WEIGHT
20	1	20M158		HANGER				SQ-2	
			1	HSS6X4X5/16	A500	15-0 3/8	20M158	Red 220R-345	269
			4	L4X4X3/8	A36	0-4	a620		13
			2	HSS6X4X5/16	A500	0-11 1/8	hs849		33
			1	HSS6X4X5/16	A500	21-0 1/8	hs850		376
			4	PL3/8"X3 1/2"	A36	0-9	p36		13
			2	PL3/8"X3"	A36	0-9	p702		6
			1	PL3/8"X11"	A36	1-0	p731		14
			2	PL3/8"X4"	A36	0-11	p779		9
			4	PL3/8"X4"	A36	0-6 1/4	p852		11
			4	3/4Ø A325N_TC BOLT		0-2 1/4		Site	
								TOTAL WEIGHT THIS DRAWING	745

REF. NUMBER
ABM882

REV #	DATE	DESCRIPTION
A	10/04/2022	ISSUED FOR APPROVAL

REVISION AND ISSUE RECORD

PROJECT WACO HIGH SCHOOL
LOCATION 2020 N 42nd St, Waco, TX 76710
CUSTOMER Rogers O'Brien Const Co Inc
ARCH/ENG O'CONNELL ROBERTSON

ALAMO STRUCTURAL STEEL
2784 OLD DALLAS RD.
WACO, TEXAS 76705
PHONE: 254 799 2471
FAX: 254 799 6227

FIELD CONN (U.N.)	HOLES (U.N.)
3/4 A325N_TC	13/16"
SURFACE PREP	SHOP PAINT
SSPC-SP2	Red 220R-345

DATE	DET	CHK
10/04/2022	RFW	AJM

JOB NO.	DRAWING NO.
32-22017	20M158

Tekla Structures