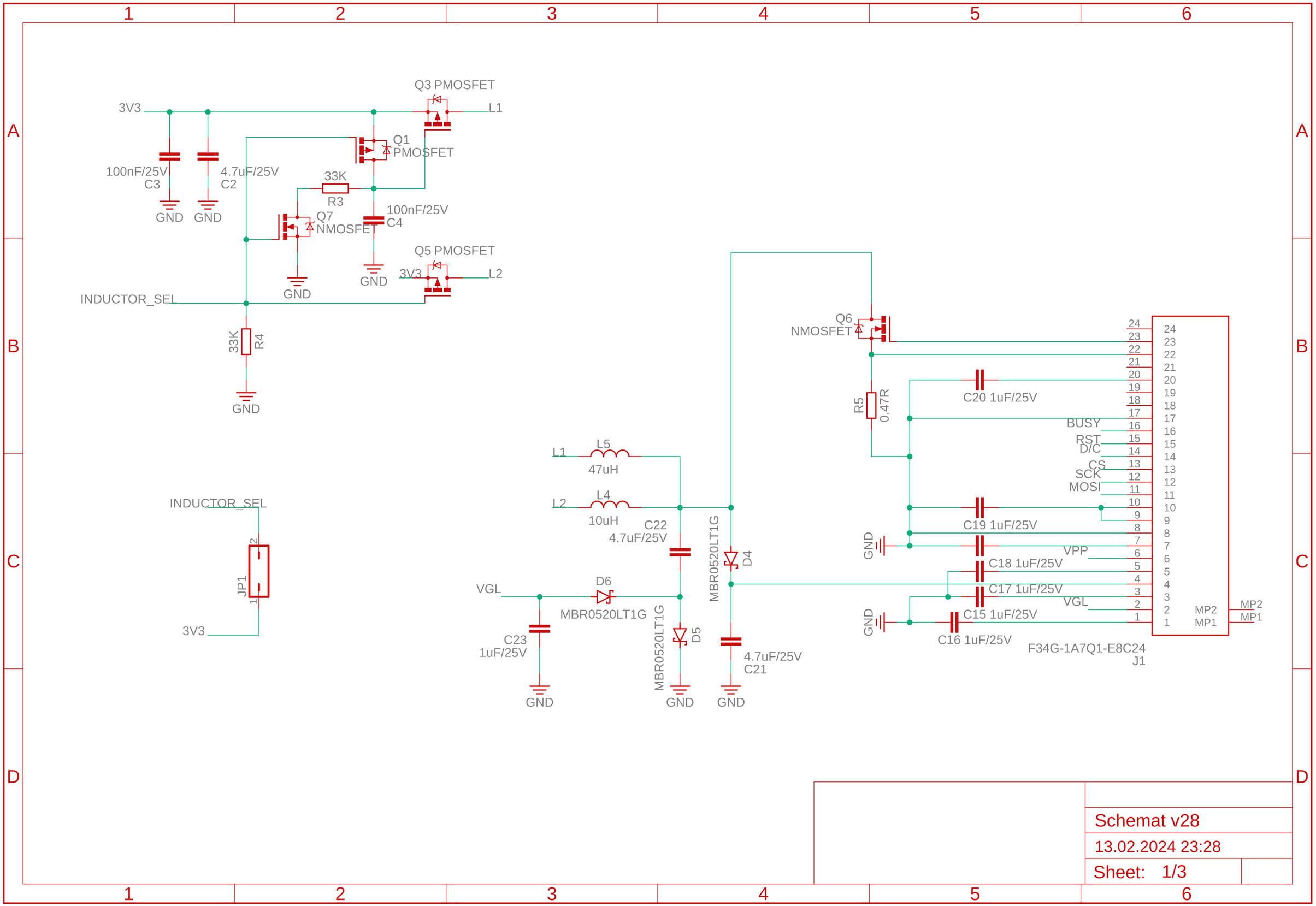

Schemat v28

13.02.2024 23:28

Sheet: 1/3

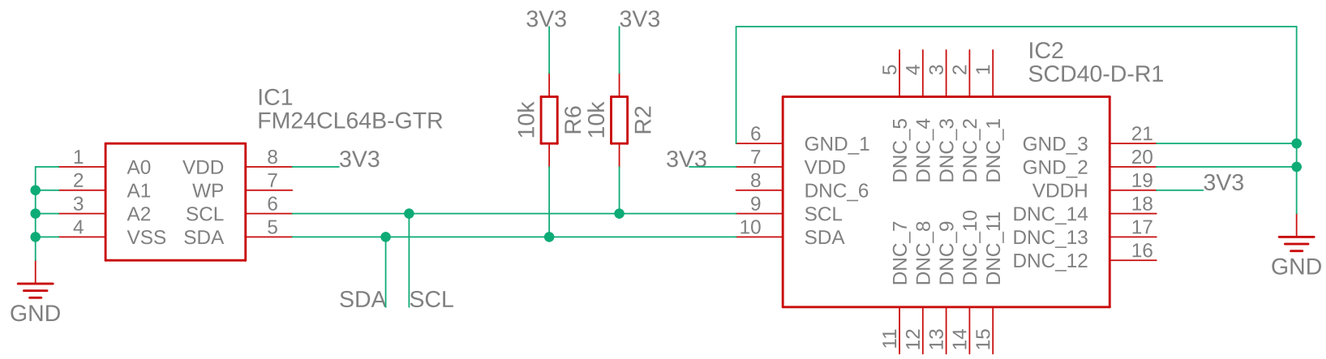

Schemat v28

13.02.2024 23:28

Sheet: 2/3

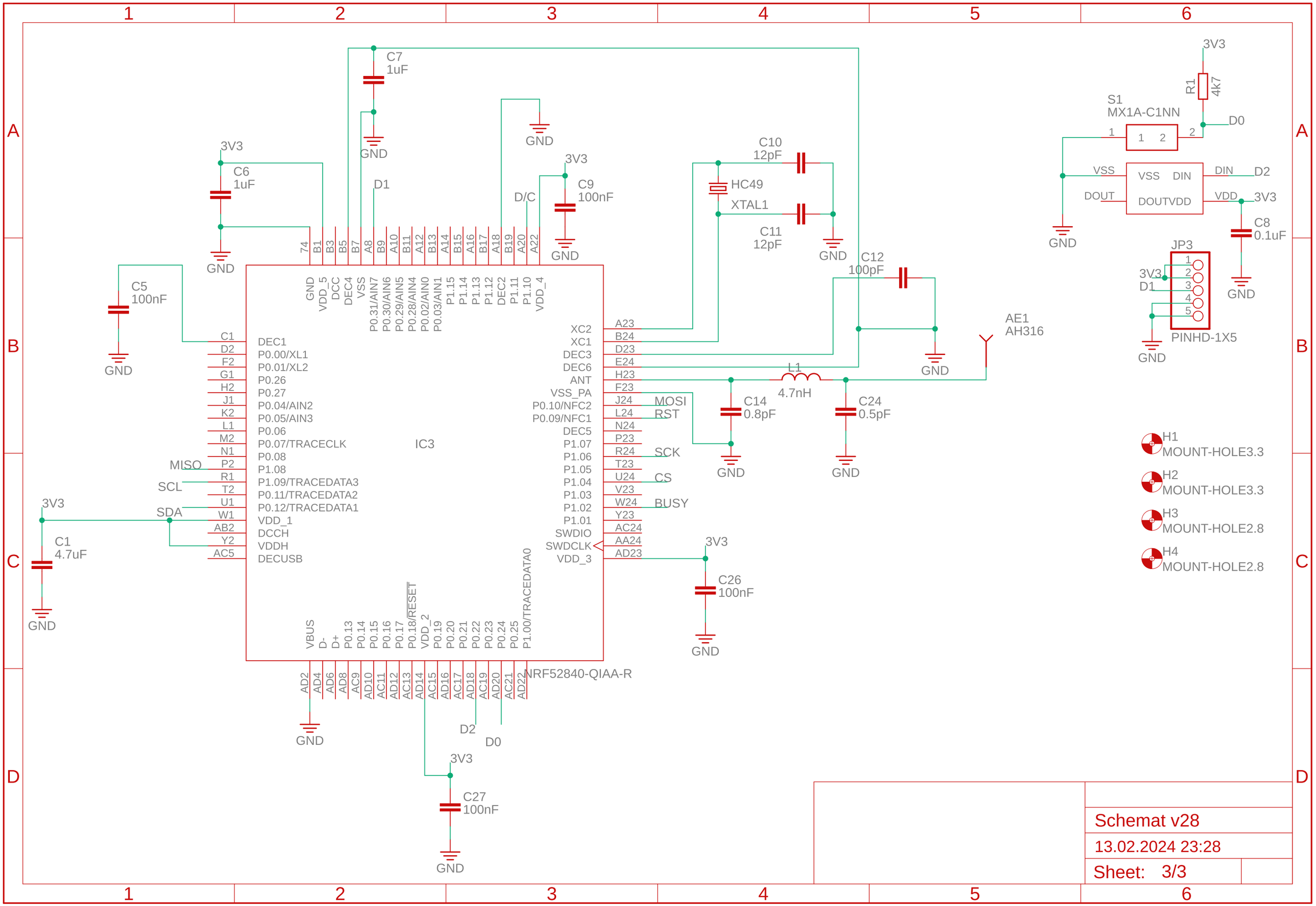
IC3
NRF52840-QIAA-R
C7 1uF
C6 1uF
C5 100nF
C1 4.7uF
C9 100nF
C10 12pF
C11 12pF
C12 100pF
C14 0.8pF
C24 0.5pF
C26 100nF
C27 100nF
C8 0.1uF
HC49
XTAL1
L1 4.7nH
AE1 AH316
R1 4k7
S1 MX1A-C1NN
JP3 PINHD-1X5
H1 MOUNT-HOLE3.3
H2 MOUNT-HOLE3.3
H3 MOUNT-HOLE2.8
H4 MOUNT-HOLE2.8
3V3
GND
D0
D1
D2
D/C
MISO
MOSI
SCL
SDA
RST
SCK
CS
BUSY
Schemat v28
13.02.2024 23:28
Sheet: 3/3