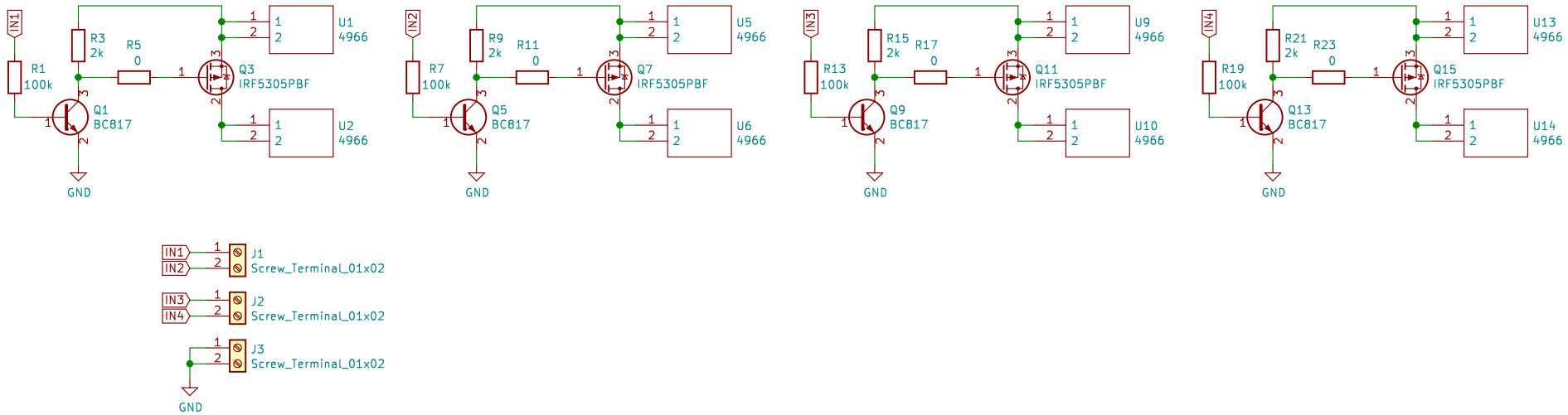

wojtekgrzela@gmail.com
Wojciech Grzeliński

Sheet: /
File: MOSFET_Rail.sch

Title: MOSFET Rail

Size: A4	Date: 2020-04-13	**Rev: 1.0**
KiCad E.D.A. eeschema (5.1.5)-3		Id: 1/1