Charger-cum-Power Board

All-in-one solar-aware power and charging module for embedded systems.

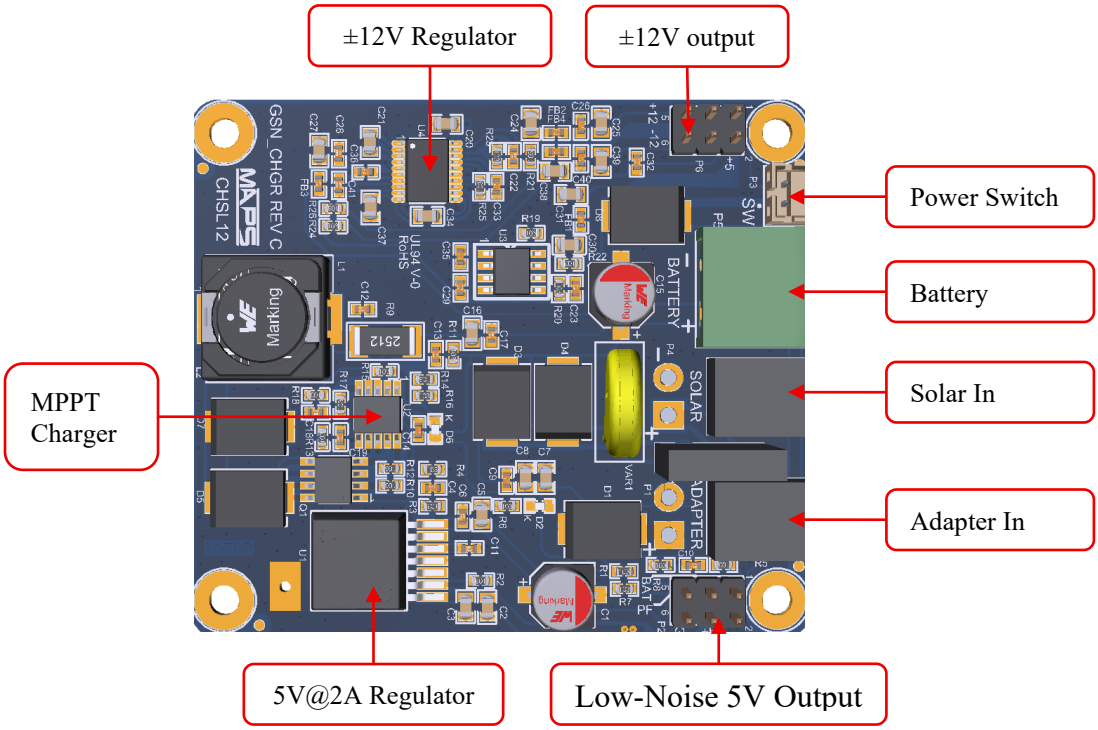

Power & Battery Support

- Supports 12V Li-ion / $LiFePO_4$ and Lead-Acid batteries (up to 10Ah)
- Built-in charge termination, current limiting, and thermal regulation
- Adjustable charging voltage and current
- ON/OFF switch for battery isolation and storage safety

Solar & Charging Engine

- Dual input support: 12V solar panel or 18V DC adapter
- CN3795-based MPPT controller for optimized solar energy harvesting
- Solar / adapter failure indication signal for system monitoring
- High-efficiency PWM buck charging architecture
- Simultaneous charging and load powering
- Charging current up to 4.0A

Output Power Rails

- ±12V@500mA using Low-Noise charge pump with LDO output, Regulated, low EMI
- 5V@2A high-efficiency DC-DC Converter for digital loads
- 5V@500mA using Low-Noise LDO for analog loads

Protection & Reliability

- Multi-layer input protection using ESD diode, MOV, and Thermal fuse for surge and lightning protection
- Thermal regulation ensures safe operation under high load conditions
- Input Voltage Indication

Mechanical & Integration

- Compact **56 × 65 mm form factor**
- Suitable for embedded and field-deployable systems

Design & Customization Support

- Complete **design files (schematics, Gerber, and assembly data)** can be shared on request
- Supports **customization and design adaptation** for specific applications
- Suitable for research, field deployment, and OEM integration