Geophone Data Acquisition Board

8-channel simultaneous sampling geophone acquisition system with advanced analog signal conditioning and flexible digital interface.

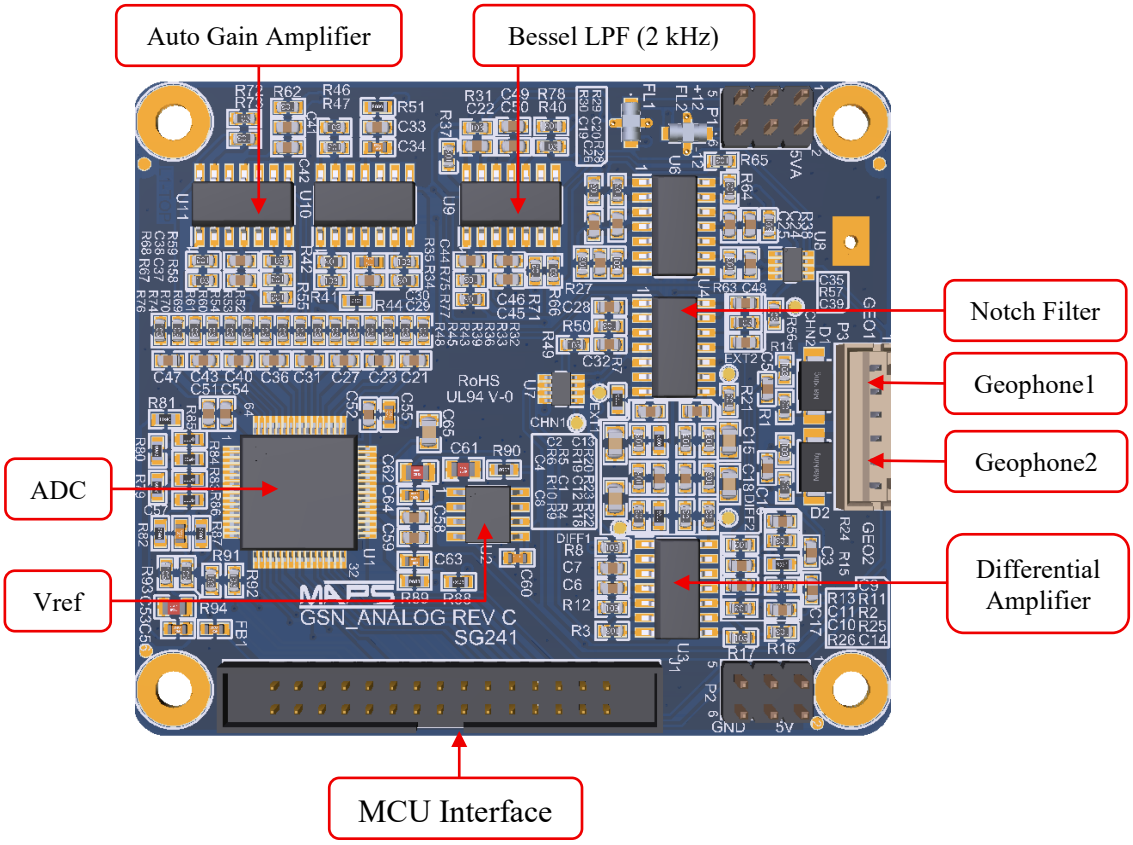

Sensor Inputs & Analog Front-End

- Supports **two geophone inputs** with **4 ADC channels per input**
- **±5V differential signal path, AC-coupled inputs** for signal acquisition
- Input protection using EMI filtering and transformer-based common-mode noise rejection
- High dynamic range front-end with **Automatic gain up to 1:1000**
- Low-noise analog front-end optimized for microvolt-level signals

Data Acquisition Performance

- **16-bit SAR ADC** for precise signal conversion
- **Simultaneous** sampling of all channels
- Sampling rate up to **200 kSPS per channel**
- **Selectable oversampling** for improved resolution and noise reduction
- Supports **external voltage reference** for enhanced accuracy and flexibility

Signal Conditioning & Filtering

- **Low-frequency range extender** for improved response to deep signals
- Selectable **50/60 Hz notch filter** for mains noise rejection
- **2nd order Bessel low-pass filter (2 kHz cutoff)** for phase-linear signal integrity
- Designed to preserve waveform shape—critical for geophysical analysis

Interface & Connectivity

- Flexible digital interface: **Parallel (16/18-bit) or SPI selectable**
- Easy integration with MCU, FPGA, or high-speed data acquisition systems
- Supports board stacking for multi-channel expansion

Power Architecture

- **±12V rails** for precision analog signal conditioning
- Dedicated **5V and 3.3V supplies** for ADC and digital sections
- Optimized power separation for low-noise performance

Mechanical & Integration

- Compact **56 × 65 mm form factor**
- Suitable for embedded and field-deployable systems
- Designed for easy integration with power, processing and logging platforms

Design & Customization Support

- Complete **design files (schematics, Gerber, and assembly data)** can be shared on request
- Supports **customization and design adaptation** for specific applications
- Suitable for research, field deployment, and OEM integration