energy&fuels

Article

pubs.acs.org/EF

Coupling Mineral Carbonation and Ocean Liming

P. Renforth*[,†,‡] and T. Kruger[‡]

[†]Department of Earth Sciences, University of Oxford, South Parks Road, Oxford OX1 3AN, United Kingdom

[‡]Oxford Geoengineering Programme, Oxford Martin School, Old Indian Institute, University of Oxford, 34 Broad Street, Oxford OX1 3BD, United Kingdom

Supporting Information

ABSTRACT: The process by which basic/ultrabasic silicate minerals (e.g., olivine) are reacted with CO_2 to produce solid carbonate minerals ("mineral carbonation") has been suggested as a method to sequester carbon dioxide from point sources into stable carbonate minerals. Alternatively, the addition of lime (produced from calcining carbonate minerals) to the surface ocean ("ocean liming"), which results in an increase in ocean pH and a draw-down of atmospheric CO_2 has been proposed as a "geoengineering" technology, which stores carbon as dissolved alkalinity in the surface ocean. Combining these approaches, in which the magnesium carbonate minerals produced from mineral carbonation are used as a feedstock for ocean liming (mineral carbonation-ocean liming; MC−OL), may reduce the limitations of individual technologies while maximizing the benefits. Approximately 1.9 metric tons of magnesium silicate (producing 0.7 ton of magnesium oxide) are required for every net ton of CO_2 sequestered. A total of 0.7 ton of CO_2 is produced from this activity, 70% of which is high-purity (>98%) from calcining and potentially amenable for geological storage. The technology can be conceptually viewed as an alternative to direct air capture and swaps ambient CO_2 for high-purity point source CO_2. MC−OL requires approximately 4.9 and 2.2 GJ of thermal and electrical energy ton^{-1} of CO_2 sequestered. MC−OL has less demand for geological storage; only 0.5 ton of CO_2 needs to be injected for every ton of CO_2 removed from the atmosphere. However, manipulation of ocean chemistry in this way potentially creates an additional environmental impact (localized elevated pH or co-dissolution of trace metals) and requires additional attention.

1. INTRODUCTION

The only sustainable solution to human-induced climate change is the reduction in anthropogenic greenhouse gas creation and release. Given the scale of the task and the current institutional lock-in of fossil fuel energy, there has been minimal political progress made toward this solution over the last 30 years. With the potential risk posed by climate change over the coming decades, solutions have been proposed that attempt to prevent the accumulation of carbon dioxide in the atmosphere. Carbon capture and storage (CCS) is prominent of these technologies, in which CO_2 is stripped and purified from point source production sites (power stations, cement kilns, and blast furnaces). This is usually coupled with compression and injection into underground storage repositories.[1] "Geoengineering" technologies have also been proposed[2,3] to directly manipulate the Earth's climate by reflecting or dissipating incoming solar radiation[4] or remove carbon dioxide from the atmosphere (see below).

Alternatively, CO_2 could be reacted with silicate-bearing rocks to produce carbonate minerals ("mineral carbonation")[5−8] through eq 1, which shows the exothermic reaction ($\Delta H = -88$ kJ mol^{-1})[8] between the olivine end member mineral forsterite (Mg_2SiO_4) and CO_2.

$$Mg_2SiO_4 + 2CO_2 \rightarrow 2MgCO_3 + SiO_2 \quad (1)$$

Silicate minerals are common at the Earth's surface,[9] with an estimated storage capacity of $>10^4$ gigatons of CO_2 ('00s of years of current anthropogenic emissions). However, there is a range of predicted costs associated with this technology, largely depending upon the mineral processing requirements (comminution and/or heat treatment) and transport. An extensive study by Gerdemann et al.[5] estimated the cost to be 1.5−8.8 GJ metric ton^{-1} of CO_2 (and >US$100 ton^{-1} of CO_2), although the full process has yet to be optimized, and recent work suggests that integration of mineral carbonation into local industries may provide additional economic benefit.[10] A large component of the cost of these CCS schemes is associated with the purification of CO_2 from flue gas (from a volumetric concentration of 10−15% to >98% for injection), which costs >US$50.[11]

The "safe" concentration of CO_2 in the atmosphere is uncertain. However, should we surpass this level, it may be necessary to reduce atmospheric concentrations.[12] Therefore, it is prudent to develop carbon dioxide removal (CDR) technologies to sequester CO_2 directly from the atmosphere, independent of, albeit complementary to, conventional mitigation (e.g. direct air capture[13] or iron fertilization of the ocean[14]). Collectively or individually, these technologies may be able to mitigate a meaningful proportion of anthropogenic emissions, similar to CCS.

A technology currently under investigation is the addition of lime (CaO) into the ocean ["ocean liming" (OL)].[15,16] Lime is produced by calcining calcium carbonate ($CaCO_3$) contained in limestone at elevated temperatures (∼1000 °C). The feasibility

Special Issue: Accelerating Fossil Energy Technology Development through Integrated Computation and Experiment

Received: December 10, 2012
Revised: January 21, 2013
Published: January 23, 2013

ACS Publications © 2013 American Chemical Society

Table 1. Thermodynamics of Decarbonization[a]

mineral name	ΔH_f (kJ mol^{-1})	decarbonization	ΔH_r (kJ mol^{-1} oxide)
magnesite ($MgCO_3$)	−1113.28	$MgCO_3 \rightarrow MgO + CO_2$	118.3
nequehonite ($MgCO_3{\cdot}3H_2O$)	−1977.26	$MgCO_3{\cdot}3H_2O \rightarrow MgO + CO_2 + 3H_2O_{(g)}$	124.8
hydromagnesite [$Mg_5(CO_3)_4(OH)_2{\cdot}4H_2O$]	−6514.86	$Mg_5(CO_3)_4(OH)_2{\cdot}4H_2O \rightarrow 5MgO + 4CO_2 + 5H_2O_{(g)}$	100.8
calcite ($CaCO_3$)	−1207.37	$CaCO_3 \rightarrow CaO + CO_2$	178.8
periclase (MgO)	−601.49		
lime (CaO)	−635.09		
water (H_2O)	−285.83		
carbon dioxide (CO_2)	−393.51		

[a]Data from Robie and Hemingway.[21]

of OL requires that the evolved CO_2 is captured and sequestered. Lime dissolution in the surface ocean results in a pH increase and a shift in equilibrium of the carbonate system, which ultimately reduces the pCO_2 in the solution and induces a migration of CO_2 from the atmosphere. In this process, CO_2 is stored as dissolved calcium bicarbonate (eq 2), analogous to "solubility trapping" in saline aquifers. For every molar addition of lime, there is approximately 1.7 mol of CO_2 stored. It is necessary for this process to occur in the surface layer of the ocean (~150 m deep), which is in equilibrium with the atmosphere.

$$CaO + 2CO_2 + H_2O \rightarrow Ca^{2+} + 2HCO_3^- \quad (2)$$

The addition of alkalinity into the surface ocean results in an increase in the saturation state of carbonate minerals. Carbonate minerals are already 3−5 times supersaturated in the surface ocean, and a level of approximately 20−25 times supersaturation is required to induce spontaneous (unseeded) precipitation,[17] which would reverse eq 2 and lower the effectiveness of OL. Furthermore, the rate of homogeneous (seeded) aboitic precipitation is slow and currently accounts for a small amount of carbon export into the deep ocean. Further work is required to assess the geochemical consequences of additional alkalinity into the surface ocean, particularly the response of calcifying organisms.

The energy requirements of OL are substantial, which Renforth et al.[15] estimates to require between 2.5 and 5.6 GJ (thermal) and 0.1 and 1.2 GJ (electrical) ton^{-1} of CO_2 (and cost US$71−110 ton^{-1} of CO_2), largely because of the endothermic calcining of calcium carbonate. Energy requirements decrease with increasing concentrations of magnesium in the carbonate. For instance, dolomite [$CaMg(CO_3)_2$] requires 2.5−3.5 GJ (thermal) ton^{-1} of CO_2. The use of pure magnesium carbonate minerals, which decarbonate at a lower temperature (<600 °C), and a smaller heat of dissociation (Table 1) would reduce the energy cost further. However, magnesium carbonate is relatively scarce, occurring naturally in evaporite deposits[18] or weathering products from ultramafic rocks.[19] Globally, 11 gigatons of $MgCO_3$ reserves are estimated, of which 11 megatons are extracted each year and calcined to produce MgO to be used as a refractory building material.[20] Even if this material was 100% pure $MgCO_3$, the reserves could only capture <10 gigatons of CO_2 equivalent to 4 months of global CO_2 emissions. This paper explores the potential of using the magnesium carbonate produced by mineral carbonation with OL (Figure 1, Table 2, eq 3). Combining these technologies results in the recycling of CO_2; this decouples mineral carbonation from point-source emissions

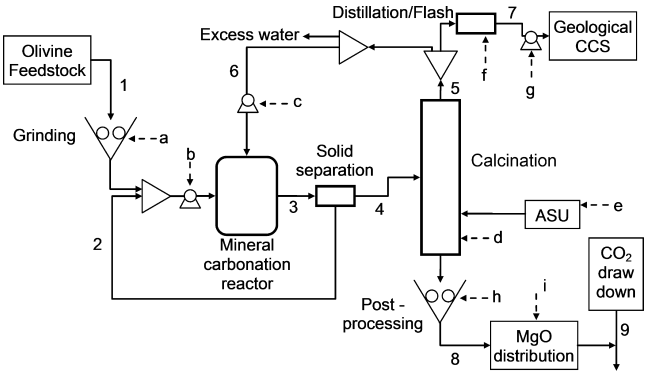

Figure 1. Industrial flow diagram of the MC−OL process. See Table 2 for mass and energy flows.

and negates expensive gas scrubbing procedures. Furthermore, energy contained in the evolved water and CO_2 in the calcining stage can be recycled back into the mineral carbonation step, reducing the requirements for heating. However, additional CO_2 is created from the combustion of fossil fuels in the furnace, which must be sequestered. OL technology must also be located adjacent to the coast to avoid expensive land transportation.

$$Mg_2SiO_4 + 4CO_2 + 4H_2O \rightarrow 2Mg^{2+} + 4HCO_3^- + H_4SiO_4 \quad (3)$$

This paper presents a techno-economic assessment of mineral carbonation−ocean liming (MC−OL) by bringing assessments on the separate technologies.

2. PROCESS REQUIREMENTS

The scope of this analysis is limited to an exploratory evaluation of the carbon budget of MC−OL; a full life cycle analysis would be inappropriate without this initial study. When deployed at scale, the quantity of silicate material processed through the life cycle of MC−OL far exceeds the amount (by several orders of magnitude) of other materials used. Therefore, an attributional approach is used here using the assumptions listed in the Supporting Information. The system boundaries are limited to extraction, mineral carbonation, calcination, and ocean distribution. The cut-off criteria for inclusion in the model was arbitrarily assigned given the overriding influence of silicate material flux. While this is a potential source of error in the derived value, it is appropriate for this exploratory study.

2.1. Silicate Extraction and Initial Processing. Extraction and processing of silicate material for mineral carbonation

Table 2. Mass Flow (Tons Net Ton^{-1} of CO_2 Sequestered) and Energy Consumption (MJ Net Ton^{-1} of CO_2 Sequestered) in the Modeled Process (See Figure 1)

	1	2	3	4	5	6	7	8	9
Mg_2SiO_4	1.94		0.39	0.39				0.39	
$MgCO_3$			1.42	1.42					
MgO								0.68	
SiO_2			0.63	0.63				0.63	
H_2O		5.06	5.06	0.51	0.97	0.51			
CO_2				*a*	1.54	0.89	0.6593		1.26
	a	b	c	d	e	f	g	h	i
electrical	733.3	6.7	1.5		485.6	197.8	261.1	554.5	
thermal				4746.8					166.4

[a]Gas venting before calcining will likely release some CO_2 into the atmosphere. However, the total mass balance of ref 22 suggests this may be negligible (<3% total CO_2 circulating).

Table 3. Mineral Carbonation Process Variables

source/variables	22		5		26	27
silicate feed	wollastonite	olivine	heat-treated serpentine	wollastonite	olivine	olivine
silicate feed rate (ton h^{-1})	230					78
CO_2 feed rate (ton h^{-1})	62					42
silicate/water ratio	0.4				>0.2	0.3
reaction temperature (°C)	200	185	155	100	185	155
pCO_2 (bar)	20	151	116	41	135	90
carbonation extent (%)	69	81	92	82	60	100
particle diameter (μm)	<38	<38	<38	<38	37−200	10
reaction time (h)			~4−8			24

are energy-intensive, primarily depending upon comminution requirements. Previous studies have suggested the (electrical) energy requirements to be between 175 and 1353 MJ ton^{-1} depending upon silicate type and treatment method,[5,22] to produce particles of <38 μm in diameter. The relationship between mineral reactivity and comminution remains poorly understood,[23] and the extraction life cycle is not optimized for this. Here, we use a base case value of 360 MJ ton^{-1} of silicate and analyze the sensitivity of the cost estimates between 175 and 1353 MJ ton^{-1} of silicate. Extraction energy is largely negligible in comparison to the total energy costs of the scheme, but a nominal quantity of 8 MJ ton^{-1} has been included in the calculation.[23]

2.2. Mineral Carbonation. Mineral carbonation is the process by which silicate minerals are reacted with CO_2 at elevated temperature and pressure[5−8] (direct aqueous mineral carbonation). Alternatively, the divalent cations can be extracted from the silicate prior to carbonation.[24,25] Despite extensive previous research, the availability of mass flow and energy consumption data that can be applied to an engineering process model is limited. Table 3 presents a summary of the available information. While the output from the reactor (carbonation extent and reaction time) is dependent upon the reaction conditions (temperature and pressure) and material properties (mineralogy and surface area), the variables in Table 3 are used here to qualify the boundary conditions of the sensitivity analysis.

Here, we assume a process with a silicate input of 230 tons h^{-1} (using process flow information from ref 22), which has a composition of 43.5% MgO, 40.5% SiO_2, and 10.5% Fe_2O_3 (equivalent to a typical ultrabasic rock[28]) The base case analysis in this study assumes that a silicate/water ratio of 0.38, a reaction temperature of 180 °C, and a pCO_2 of 20 bar results in a carbonation extent of 80%. Subsequently, the output of the reactor is 168.1 tons of $MgCO_3$ h^{-1}, 46.0 tons of Mg_2SiO_4 h^{-1}, 74.5 tons of SiO_2 h^{-1}, 18.6 tons of Fe_2O_3 h^{-1}, and 600.1 tons of H_2O h^{-1}. Sensitivity of the model to these variables has been explored further in section 3 (herein energy consumption is expressed as power, MW, relative to these fluxes). The partial pressure of water in the reactor is maintained at 16 bar for all analyses. A total of 8.3 and 14.8 MW are required to heat the silicate and water, respectively. However, 9.1 MW is produced from the cooling of recycled CO_2; 37.8 MW is produced from recycled water vapor from the calciner condensing in the reactor; and 24.4 MW is generated from the exothermic carbonation reaction (eq 1). Of this energy produced in the reactor, 80% is assumed to be useful (this varies between 60 and 90% in the literature for the reaction heat[5,22,26,27]). Even when an 80% thermal efficiency is applied to the reactor, the energy production is greater than that which is required for heating. Therefore, the energy requirements for the reactor are assumed to be negligible.

Dependent upon the size of the particle, solid−liquid separation can be a relatively energy-intensive process.[29] For particles under 1 mm, a range of pressure-related filtration techniques are required. These methods use a pressure gradient across a cake of solids and filtration media to draw water in the direction of the gradient. For vacuum filtration, pressure gradients of 1 bar can be used to dewater 20−70 μm particles, creating a rest moisture content of <10%. Pressure filtration can be used for small particle diameters but operates at 2−10 bar pressure gradient to create a moisture content of <15%. The latter, more conservative value has been used in the base case calculation, and the sensitivity to a moisture content of 5−15% has been modeled. Approximately 12 m^3 of filter volume is required for a 1 megaton of silicate year^{-1} operation (see the Supporting Information). Here, 600.1 tons of H_2O h^{-1} and 307.2 tons of solid h^{-1} are passed into the pressure filter. We

assume a base case separation of 90% (which is varied in the sensitivity analysis between 85 and 95%).

2.3. Calcination. Decarbonization of carbonate minerals is one of the oldest industrial processes, in which the product (lime) is used as a cementitious building material. Contemporary calcining technology is highly mature and is used for the manufacture of 3.2 gigatons of cement and 330 megatons of lime year^{-1}.[30] Given that the decarbonization of carbonate minerals is endothermic and produces CO_2 during chemical decomposition, the cement industry produces around 5% of the anthropogenic CO_2[31] as a result of fossil fuel combustion.

Mullinger and Jenkins[32] and Renforth et al.,[15] cover calcining technology in greater depth, but a summary of the energy, carbon, and financial costs is included in Table 4. It requires approximately 28 kJ mol^{-1} to raise the temperature of magnesite from mineral carbonation temperature (180 °C) to calcining temperature (550 °C) and 118.3 kJ mol^{-1} for the decarbonation reaction (Table 1). This is substantially less than the calcination of calcite (179 kJ mol^{-1}).[15]

Table 4. Costs of Calcination[15]

calciner cost (US$ ton^{-1} of MgO)	367.0
lifetime of the plant (years)	40.0
discount rate (%)	4.0[a]
discounted calciner cost (US$ ton^{-1} of MgO)	18.5
maintenance (4.5% of installed equipment cost)	16.5
labor	4.6
supervision, 20% of labor	0.9
administration and overhead, 35% of labor	1.6
local taxes, ratesm etc., 1% of the installed cost	3.7
insurance, 1% of the installed cost (US$ ton^{-1} of MgO)	3.7
fixed running costs (US$ ton^{-1} of MgO)	30.9
fixed running costs (US$ h^{-1})	2475.7
discounted calciner cost (US$ h^{-1})	1484.5

[a]Discount rate has been simulated in the model between 2 and 12%.

The energy required to heat the influx material (307 tons h^{-1} of $MgCO_3$, Mg_2SiO_4, SiO_2, and Fe_2O_3) to decarbonization temperature (550 °C) is 25.5 MW. Decarbonation heat of $MgCO_3$ is is 65.8 MW, and the energy required to vaporize the remaining water is 37.8 MW. However, around 2.5 MW is generated from cooling influx water from 180 °C to a vaporization temperature of 100 °C. This produces approximately 80.1 tons of MgO h^{-1}, which will potentially draw 149.7 tons of CO_2 h^{-1} from the atmosphere when dissolved in the surface ocean. The thermal efficiency of the kiln was assumed to be 90%, which is typical for state of the art technology.

In the process proposed here, it is imperative to produce a high-purity CO_2 flue gas for cycling back into the carbonation reactor or sequestration into geological rock formations. It is probably realistic to assume that the energy used in calcining will be derived from fossil fuels, and for every ton of MgO produced, approximately 1.1 and 0.8 tons of CO_2 are produced by chemical decomposition and fuel combustion, respectively. Oxy-fuel combustion technologies, which involve combustion of fuel in oxygen-enriched gases, are being developed to produce relatively pure CO_2 waste gases.[33] The primary additional energy requirement of an oxy-fuel process is the air separation device, which uses approximately 720 MJ ton^{-1} of O_2.[34] The gas produced from an oxy-fuel process is enriched in CO_2, but additional work is required to purify the gas to pCO_2 >98% for geological storage.[34,35] Here, a distillation unit is used[36] requiring approximately 300 MJ ton^{-1} of CO_2 (it is assumed that a 95% CO_2 gas stream is sufficient for mineral carbonation).

2.4. Post-processing for Dissolution in the Surface Ocean. The particles applied to the ocean must dissolve within the mixed layer (typically up to 150 m deep) for OL to be effective. The dissolution time of MgO particles in the ocean can be estimated by Stokes' law (eq 4)

$$v_s = \frac{9}{2}\left(\frac{\rho_s - \rho_f}{\mu}\right) g \frac{d_0^2}{4} \tag{4}$$

where v_s is the sinking velocity, ρ_s and ρ_f are densities of the solid and fluid, respectively, g is the acceleration due to gravity, μ is the dynamic viscosity, and d_0 is the particle diameter. Dissolution of the oxide particle reduces the diameter, which can be estimated by applying a shrinking core model (eq 5)

$$X(t) = \frac{{d_0}^3 - (d_0 - 2 \cdot w_r \cdot v_m \cdot t)^3}{{d_0}^3} \tag{5}$$

where W_r is the dissolution rate (kg m^{-2} s^{-1}) and V_m is the volume of the solid (m^3 kg^{-1}). Resolving these equations for d_0 as the particle sinks through the mixed layer suggests that an initial particle size on the order of 10 μm would dissolve before the bottom of the mixed layer (using typical parameters from Table 5). Periclase dissolution proceeds with rapid hydration of its surface to form brucite [$Mg(OH)_2$], followed by the slower dissolution of brucite,[37] which may be inhibited or catalyzed by ionic species in solution.[38] This model is highly simplistic but is sufficient to suggest that additional processing may be required to reduce the MgO particle size after calcination. Here, we assume that approximately 30.1 MW is required to process 219.1 tons h^{-1}; this is probably conservative given that the particles are already likely to be small following precipitation and calcination. Additional research is required to develop process information in this area.

Table 5. Typical Parameters for MgO Dissolution in Seawater

parameter	value
ρ_s	3570 kg m^{-3}
ρ_f	1024 kg m^{-3}
g	9.81 m s^{-2}
μ	0.00108 N s m^{-2}
W_r	10^{-9} kg m^{-2} s^{-1}
V_m	$1/\rho_s$

2.5. Distribution. The loading and distribution of lime have been investigated by Renforth et al.,[15] which focuses on the distribution of less dense CaO rather than MgO. However, the values in this study have been used without modification. The discharging of cargo from ships while at sea is not a routine operation and would, in most circumstances, contravene the London Convention (discussed in more detail below). However, it may be possible to adapt bulk carriers for this task. Renforth et al.[15] estimates oceanic distribution of lime powder to cost 99.5 MJ ton^{-1} of material over a ship use time of nearly 11 days. Therefore, each ship can distribute around 10 Mt year^{-1}, and approximately 100 ships would be required for a net carbon removal of ~1 gigaton of CO_2 per year.

Table 6. Energy, Emissions, and Cost Summaries for the MC[a]−OL Scheme[b]

energy and emissions summary			cost summary (US$ h^{-1})		
case	1	2	case	1	2
natural gas (MW)	156.3	154.8	raw material	690.0	690.0
electricity (MW)	73.8	72.2	reactor, fixed running	438.7	438.7
fuel (MW)	5.5	5.0	reactor, discounted capital	63.9	63.9
total CO_2 emissions, natural gas (tons h^{-1})	78.2	77.4	calciner, fixed running	2475.7	2475.7
total CO_2 emissions, electricity (tons h^{-1})	29.5	28.7	calciner, discounted capital	1484.5	1484.5
total CO_2 emissions, fuel (tons h^{-1})	1.6	1.5	distribution, port handling	1205.2	1102.8
total CO_2 emissions (tons h^{-1})	109.3	107.8	distribution, vessel hire	657.4	601.5
total CO_2 emissions sequestered (tons h^{-1})	78.2	77.4	natural gas energy	2813.7	2786.0
total CO_2 draw down in the ocean (tons h^{-1})	149.7	149.7	electricity	5312.4	5194.6
			fuel	19.7	18.1
			CO_2 sequestration	234.5	232.2
			sale iron ore byproduct		−1862.7
net CO_2 draw down (tons h^{-1})	118.6	119.4	total cost	15395.7	13225.1
unit cost (US$ ton^{-1} of CO_2)	129.9	110.8			

[a]A total of 230 tons of olivine h^{-1}. [b]Cases 1 and 2 represent the base case without and with iron recovery, respectively.

3. MODEL AND SENSITIVITY ANALYSIS

3.1. Combined Processes. The base case techno-economic analysis of the combined processes suggests that 4.9 GJ (thermal) and 2.2 GJ (electrical) is required of every ton of CO_2 (net removal) and costs US$130 (Table 6). The primary costs are associated with energy generation (45%) and fixed running costs of the reactor and kiln (19%).

Olivine is composed of a mixture of the end member minerals forsterite (Mg_2SiO_4) and fayalite (Fe_2SiO_4). As such, olivine-bearing rocks usually contain substantial concentrations of iron. Brent et al.[10] suggests that this iron may be separated from the mineral carbonation reactor products and sold as a relatively rich ore for the iron- or steel-making industry. If this is included into the process described here (approximately 81 kg of iron as magnetite is produced for every ton of silicate), the thermal and electrical energy and financial costs are reduced to 4.8 and 2.2 GJ ton^{-1} of CO_2 and US$111 ton^{-1} of CO_2, assuming a value of US$100 ton^{-1} of Fe_2O_3 (although this has fluctuated between US$60 and 120 over the last 5 years[30]). The production of secondary materials is a topic of debate in mineral carbonation.[39] While this may be developed into feasible business models during the initial phase of technology development, it is unlikely to be feasible if the industry expands to make a significant impact on anthropogenic CO_2 emissions. There is no other industry that operates at the same magnitude at that which produces CO_2 (with the exception of the hard-rock/aggregate industry). Therefore, high-value commodities (silica, iron ore, or trace metals) would likely flood existing markets if they were available. Further research is required to assess the influence of the effect of technology use on existing material markets, which should be factored into future studies as a sensitive variable. If the value is attributed to a co-product, part of the carbon budget should also be attributed together with any displacement of emissions from the existing industry.

3.2. Sensitivity Analysis. The energy and carbon cost estimates from the base case analysis depend highly upon the assumptions made. It is important to understand the sensitivity of the cost estimate with reasonable changes in assumptions. Figure 2 presents an analysis of a sensitivity of each variable. It can be seen that the total energy requirement is sensitive to comminution energy, carbon intensity of energy, carbonation extent, and solid separation extent. Total cost scales similarly with comminution energy requirements but is influenced by energy cost and raw material cost. Total cost varies between US $84 and 245 ton^{-1} of CO_2.

This type of analysis assumes that each variable is mutually exclusive, which is not the case in mineral carbonation. However, the results of this model can be used as a first approximation of process cost. Figure 3 collates all of the sensitivity results, and a "best case" scenario indicates the energy and economic costs for a combination of the most optimistic assumptions. While it may not be possible to reach this cost, it demonstrates the potential of an optimized technology.

4. DISCUSSION

The cost of MC−OL (US$111−130 ton^{-1} of CO_2) is comparable to other technologies that remove CO_2 from the atmosphere (Table 7). MC−OL requires 0.5 ton of CO_2 geological sequestration for every ton of CO_2 removed from the atmosphere, which compares favorably to direct air capture technologies (which have a 1:1 ratio) and OL by calcining calcium carbonate (0.9:1 ratio). The electrical energy demand is greater than OL due to the additional comminution requirements, which has yet to be optimized. Furthermore, the greater electricity demand in MC−OL includes comminution following calcination. This may be unnecessary but has been included here to provide a more conservative estimate of cost.

Operation of MC−OL at a globally significant scale would induce substantial material and energy flows. For instance, a technology that sequesters 1 gigaton of CO_2 from the atmosphere $year^{-1}$ would require the extraction and processing of approximately 1.9 gigatons of olivine-rich rock, consume approximately 11 EJ of energy (equivalent to 2.3% of global energy consumption), and require the distribution of 0.5 gigaton of MgO onto the surface ocean. While the scale of material processing is large, it is of the same order of magnitude as other global rock extraction industries (approximately 2.5 gigatons of cement are produced globally[45]). Assuming a typical kiln operation of 1 megaton of calcined product $year^{-1}$, approximately 500 sites would need to be created, with potential environmental damage associated with mineral extraction, processing, and calcining.

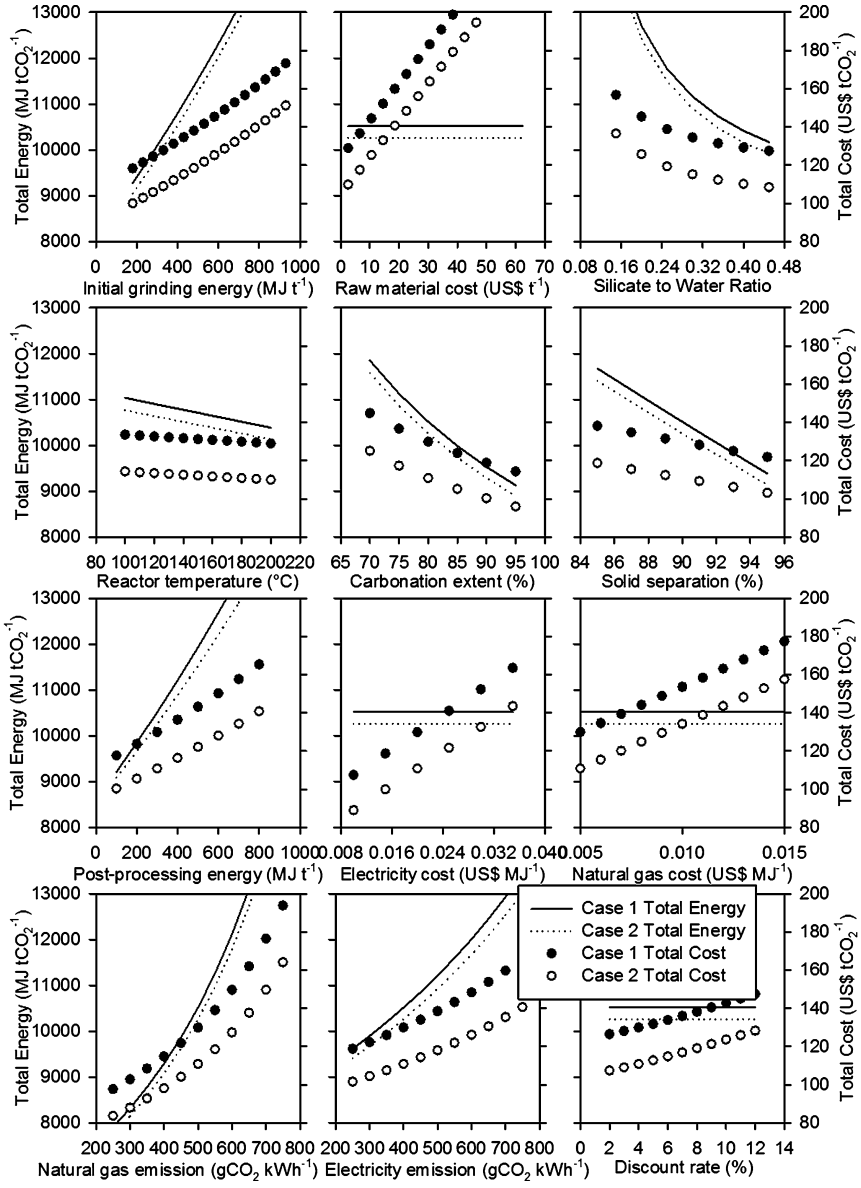

Figure 2. Results from sensitivity analysis. Cases 1 and 2 represent combined processes excluding and including iron recovery, respectively. Total energy was calculated by assuming an efficiency of electrical energy of 40%.

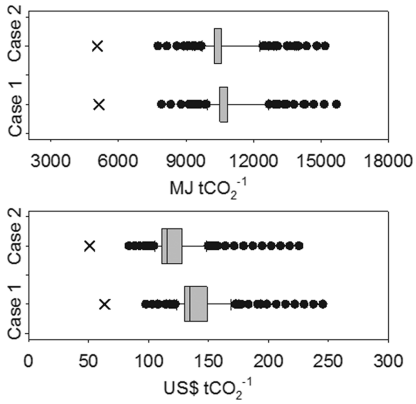

Figure 3. Collated sensitivity output. The crosses represent a combination of optimistic assumptions as a "best case" technology.

For every ton of CO_2 that is drawn into the ocean, approximately 0.7 ton of CO_2 is created from the combustion of fossil fuels. A total of 70% of this CO_2 is produced from calcining and must be sequestered for this technology to be remotely feasible. Calcining using an oxy-fuel burner (with additional purification) could produce a gas stream that was greater than 98% CO_2, which would be suitable for injection into geological formations or stand-alone mineral carbonation. Alternatively, approximately 40% of the solid could be removed following separation from the process water. The lower amount of CO_2 produced during calcination would match the requirements of the carbonation reactor, negating the need for geological storage (see case 3 in the Supporting Information). The cost of this scheme is slightly more than the base case (3.9 and 3.7 GJ ton^{-1} of CO_2 of thermal and electrical energy, respectively, and a financial cost of approximately US$172 ton^{-1} of CO_2). The potential of replacing the conventional kiln with one that is solar-powered[46,47] has also been investigated. This scheme could operate in an area with stranded renewable energy and negate the need for geological sequestration. However, the additional

Table 7. Comparison of MC−OL to Other Carbon Dioxide Removal Technologies

	energy (GJ ton^{-1} of CO_2)			
	electrical	thermal	cost of carbon (US$ ton^{-1} of CO_2)	source
MC−OL	2.2	4.8−4.9	111−130	this study
OL	0.1−1.2	2.5−5.6	71−110	15
carbonate addition to the ocean	<0.1	3.6	25[a]	40
electrochemical weathering	6.0		<100	41 and 42
direct air capture	1.4−1.8	0−51.3	150−1000	13, 43, and 44
enhanced weathering	0.1−8.4	0.8−4.2	24−578	23

[a]Limited in maximum annual capacity ∼0.5 $GtCO_2$ per year.

Table 8. Environmental Hazards Created by MC−OL

process		environmental hazard	risk
quarrying and comminution	air	dust (silicate) generation and spreading	high
		emissions from processing and transport equipment	moderate
	water	water pollution from suspended inert solids (silicates)	moderate
		dissolution of trace metals (e.g., Ni, Cr, and Cd)	low
		hydrocarbon release from equipment and fuel storage	low
	soil	disturbance of topsoil during overburden removal	high
		incorporation of rock residues into soils	low
	ecosystem	disturbance of ecosystems in and around the area of extraction	high
calcination	all	calcination has the same environmental hazards as mineral extraction; however, the potential for harm is exacerbated by the presence of caustic alkaline (MgO) rock material and calcination residue	
distribution	water	localized elevated surface ocean pH at the point of addition	high

capital and maintenance cost of a solar calciner may be prohibitive (0.2 and 1.2 GJ ton^{-1} of CO_2 of thermal and electrical energy, respectively, and a financial cost of approximately US$158 ton^{-1} of CO_2). Neither MC−OL nor the component technologies have been optimized, and additional work in this area is required.

Each stage in the MC−OL process has an environmental impact (Table 8 presents some of the major environmental hazards). Extracting large volumes of rock will have an impact on the local environment, including dust generation, ecosystem disturbance, topsoil degradation, and water and soil pollution.[48] The environmental impact of extracting silicates for mineral carbonation is likely to be similar to hard-rock extraction. The primarily air pollutant is dust generated from comminution activities that may become airborne once exposed to the environment.[49] Grinding rock never produces a single size particle but a size distribution. Comminution to a P_{80} (the size of which 80% of the product is smaller) of <38 μm will likely produce a substantial proportion of material that is <10 μm. Therefore, the potential for PM_{10} airborne pollution is high, which can lead to respiratory damage in humans and wildlife.[49] While planning and engineering controls are routinely used to substantially reduce the magnitude of the hazard,[50,51] it is impossible to mitigate the risk completely. In hard-rock extraction, the largest environmental hazard to surface water is suspended solid load,[52] in which fine material is washed into local water courses by runoff. Some of this material will dissolve, increasing riverine pH and mobilizing potentially toxic trace metals (Ni, Cr, and Cd) contained within ultrabasic rocks. Again, engineering controls can be installed to mitigate some of this risk.[53] While there are clear environmental costs associated with mining activities, the restoration of mining sites could provide substantial environmental amenity and ecosystem services.[54] The mineral carbonation and calcination of large quantities of rock will have similar environmental impacts as those in quarrying. However, some of the risk will be exacerbated by the presence of caustic material on site,[55] and additional risk will be created by fossil fuel (probably natural gas) storage on site.

When distributed globally, the effects of increasing ocean alkalinity are likely to be minimal[16,40,56] and small pH increases may be beneficial for some marine organisms. Part of the report by the Convention on Biological Diversity[57] that examines the potential impacts of geoengineering technologies only tentatively describes the effects of ocean alkalinity modification (Table 8). This is understandable given the lack of empirical evidence. Currently, environmental impact on the marine environment is controlled by the London Protocol, which prevents the dumping of substances into the ocean (with the exception of certain listed materials).[58] The London Protocol has been amended to allow for sub-seabed CO_2 sequestration or scientific research on ocean fertilization. Generally, the philosophy of the protocol allows for the dumping of inert material (dredging waste, inorganic geological materials, cement, hard rock, etc.) when terrestrial disposal is not available. Rau et al.[59] suggest that minimizing impact is an approach that may be insufficient to deal with the threat of ocean acidification, and proactive solutions to influence ocean alkalinity should be explored.

Research investigating the response of ecosystems to changes in carbonate chemistry is concerned primarily with decreases in pH caused by elevated partial pressures of CO_2 in the gas phase, which simulates ocean acidification as a result of anthropogenic emissions.[60] This research investigates organisms and ecosystems that are sensitive to changes in pH and may be useful for guiding future research on schemes promoting a change in ocean alkalinity. However, there has been no concerted effort to examine the biological response to sustained elevated alkalinity.

5. CONCLUSION

MC−OL could potentially sequester atmospheric carbon dioxide into the ocean as alkalinity. Mineral carbonation requires high-purity CO_2 gas to precipitate carbonate minerals in the reactor. Coupling MC−OL produces a high-purity CO_2 gas stream from the calciner that can be recycled back into the mineral carbonation reactor. Similarly, some of the energy that is lost in a flue gas from the kiln can be recycled as medium-grade heat to such an extent that the energy requirements of the mineral carbonation reactor are negligible. The material requirements for this are large, in which 1.9 tons of magnesium-rich ultrabasic rock (44% MgO) is required for a net sequestration of 1 ton of CO_2. Approximately 2.9−3.7 GJ (thermal) and 2.0−3.0 GJ (electrical) are required for every net ton of CO_2 removed from the atmosphere. Most of this energy is required for the calcination of magnesium carbonate minerals, which produces approximately 0.5 ton of CO_2 for every net ton of CO_2 sequestered. This CO_2 must be captured and stored for MC−OL to be feasible. It is estimated here that MC−OL will cost US$98−143 ton^{-1} of CO_2, although additional empirical evidence is required on this process. When distributed globally, the impact of MgO addition to the surface ocean is likely to be minimal. However, elevated localized pH, caused by a greater addition/dissolution rate than dispersion rate, may be problematic for marine ecosystems. Additional work is required to assess ecosystem response to changes in ocean alkalinity.

■ ASSOCIATED CONTENT

Ⓢ Supporting Information

Assumptions, process costs, sensitivity analysis, output, material thermodynamics, solid separation, gas purification electricity, and mass and energy flow (case 1). This material is available free of charge via the Internet at http://pubs.acs.org.

■ AUTHOR INFORMATION

Corresponding Author

*E-mail: phil.renforth@earth.ox.ac.uk.

Notes

The authors declare no competing financial interest.

■ ACKNOWLEDGMENTS

This work was funded by the Oxford Martin School through the Oxford Geoengineering Programme. The authors acknowledge Ed Pitt (University of Oxford) for helpful suggestions during the preparation of this work.

■ REFERENCES

(1) Benson, S.; Cook, P.; Anderson, J.; Bachu, S.; Nimir, H. B.; Basu, B.; Bradshaw, J.; Deguchi, G.; Gale, J.; von Goerne, G.; Heidug, W.; Holloway, S.; Kamal, R.; Keith, D.; Lloyd, P.; Rocha, P.; Senior, B.; Thomson, J.; Torp, T.; Wildenborg, T.; Wilson, M.; Zarlenga, F.; Zhou, D. Underground geological storage. In *IPCC Special Report on Carbon Dioxide Capture and Storage*; Metz, B., Davidson, O., De Coninck, H., Loos, M., Meyer, L., Eds.; Intergovernmental Panel on Climate Change (IPCC): Geneva, Switzerland, 2005; Chapter 5.

(2) The Royal Society. *Geoengineering the Climate: Science Governance and Uncertainty*; The Royal Society: London, U.K., 2009.

(3) Keith, D. W. Geoengineering the climate: History and prospect. *Annu. Rev. Energy Environ.* **2000**, *25*, 245−284.

(4) Crutzen, P. Albedo enhancement by stratospheric sulfur injections: A contribution to resolve a policy dilemma? *Clim. Change* **2006**, *77*, 211−220.

(5) Gerdemann, S. J.; O'Connor, W. K.; Dahlin, D. C.; Penner, L. R.; Rush, H. Ex situ aqueous mineral carbonation. *Environ. Sci. Technol.* **2007**, *41*, 2587−2593.

(6) O'Connor, W. K.; Dahlin, D. C.; Rush, G. E.; Gedermann, S. J.; Penner, L. R.; Nilsen, D. N. *Aqueous Mineral Carbonation, Final Report*; Albany Research Center, U.S. Department of Energy (DOE): Albany, OR, 2005; DOE/ARC-TR-04-002.

(7) Lackner, K. S.; Butt, D. P.; Wendt, C. H. Progress on binding CO_2 in mineral substrates. *Energy Convers. Manage.* **1997**, *38*, S259−S264.

(8) Lackner, K. S.; Wendt, C. H.; Butt, D. P.; Joyce, E. L.; Sharp, D. H. Carbon dioxide disposal in carbonate minerals. *Energy* **1995**, *20*, 1153−1170.

(9) Lackner, K. S. Carbonate chemistry for sequestering fossil carbon. *Annu. Rev. Energy Environ.* **2002**, *27*, 193−232.

(10) Brent, G. F.; Allen, D. J.; Eichler, B. R.; Petrie, J. G.; Mann, J. P.; Haynes, B. S. Mineral carbonation as the core of an industrial symbiosis for energy-intensive minerals conversion. *J. Ind. Ecol.* **2012**, *16*, 94−104.

(11) Finkenrath, M. *Cost and Performance of CO_2 Capture from Power Generation*; International Energy Agency (IEA): Paris, France, 2011.

(12) Keith, D. W. Why capture CO_2 from the atmosphere? *Science* **2009**, *325*, 1654−1655.

(13) House, K. Z.; Baclig, A. C.; Ranjan, M.; van Nierop, E. A.; Wilcox, J.; Herzog, H. J. Economic and energetic analysis of capturing CO_2 from ambient air. *Proc. Natl. Acad. Sci. U.S.A.* **2011**, *108*, 20428−20433.

(14) Buesseler, K. O.; Doney, S. C.; Karl, D. M.; Boyd, P. W.; Caldeira, K.; Chai, F.; Coale, K. H.; de Baar, H. J. W.; Falkowski, P. G.; Johnson, K. S.; Lampitt, R. S.; Michaels, A. F.; Naqvi, S. W. A.; Smetacek, V.; Takeda, S.; Watson, A. J. Ocean iron fertilization—Moving forward in a sea of uncertainty. *Science* **2008**, *319*, 162.

(15) Renforth, P.; Jenkins, B. G.; Kruger, T. Engineering challenges of ocean liming. *Energy Environ. Sci.* **2013**, in review.

(16) Kheshgi, H. S. Sequestering atmospheric carbon dioxide by increasing ocean alkalinity. *Energy* **1995**, *20*, 915−922.

(17) Morse, J. W.; He, S. Influences of T, S and pCO_2 on the pseudo-homogeneous precipitation of $CaCO_3$ from seawater: Implications for whiting formation. *Mar. Chem.* **1993**, *41*, 291−297.

(18) Parente, C.; Ronchi, L.; Sial, A.; Guillou, J.; Arthaud, M.; Fuzikawa, K.; Veríssimo, C. Geology and geochemistry of paleoproterozoic magnesite deposits (∼1.8 Ga), State of Ceará, northeastern Brazil. *Carbonates Evaporites* **2004**, *19*, 28−50.

(19) Burns, S. J.; Matter, A. Geochemistry of carbonate cements in surfacial alluvial conglomerates and their paleoclimatic implications, sultanate of Oman. *J. Sediment. Res., Sect. A* **1995**, *65*, 170−177.

(20) Büchel, K. H.; Moretto, H.-H.; Werner, D.; Woditsch, P. *Industrial Inorganic Chemistry*; Wiley-VCH: Weinheim, Germany, 2000.

(21) Robie, R. A.; Hemingway, B. S. *Thermodynamic Properties of Minerals and Related Substances at 298.15 K and 1 Bar (105 Pascals) Pressure and at Higher Temperatures*; United States Geological Survey: Washington, D.C., 1979; United States Geological Survey Bulletin 2131, p 470.

(22) Huijgen, W. J. J.; Comans, R. N. J.; Witkamp, G.-J. Cost evaluation of CO_2 sequestration by aqueous mineral carbonation. *Energy Convers. Manage.* **2007**, *48*, 1923−1935.

(23) Renforth, P. The potential of enhanced weathering in the UK. *Int. J. Greenhouse Gas Control* **2012**, *10*, 229−243.

(24) Maroto-Valer, M. M.; Fauth, D. J.; Kuchta, M. E.; Zhang, Y.; Andrésen, J. M. Activation of magnesium rich minerals as carbonation feedstock materials for CO_2 sequestration. *Fuel Process. Technol.* **2005**, *86*, 1627−1645.

(25) Alexander, G.; Maroto-Valer, M. M.; Gafarova-Aksoy, P. Evaluation of reaction variables in the dissolution of serpentine for mineral carbonation. *Fuel* **2007**, *86*, 273−281.

(26) Béarat, H.; McKelvy, M. J.; Chizmeshya, A. V. G.; Gormley, D.; Nunez, R.; Carpenter, R. W.; Squires, K.; Wolf, G. H. Carbon sequestration via aqueous olivine mineral carbonation: Role of

passivating layer formation. *Environ. Sci. Technol.* **2006**, *40*, 4802−4808.
(27) Kirchofer, A.; Brandt, A.; Krevor, S.; Prigiobbe, V.; Wilcox, J. Impact of alkalinity sources on the life-cycle energy efficiency of mineral carbonation technologies. *Energy Environ. Sci.* **2012**, *5*, 8631−8641.
(28) British Geological Survey (BGS). *Platinum-Group Element Mineralisation in the Unst Ophiolite, Shetland*; BGS: Keyworth, U.K., 1985.
(29) Metso Corporation. *Basics in Minerals Processing*; Metso Corporation: Helsinki, Finland, 2010.
(30) United States Geological Survey (USGS). *Mineral Commodity Summary*; USGS: Reston, VA, 2012.
(31) Worrell, E.; Price, L.; Martin, N.; Hendriks, C.; Meida, L. O. Carbon dioxide emissions from the global cement industry. *Annu. Rev. Energy Environ.* **2001**, *26*, 303−329.
(32) Mullinger, P. J.; Jenkins, B. G. *Industrial and Process Furnaces: Principles, Design and Operation*, 1st ed.; Butterworth-Heinemann: Oxford, U.K., 2008.
(33) Romeo, L. M.; Abanades, J. C.; Escosa, J. M.; Paño, J.; Giménez, A.; Sánchez-Biezma, A.; Ballesteros, J. C. Oxyfuel carbonation/calcination cycle for low cost CO_2 capture in existing power plants. *Energy Convers. Manage.* **2008**, *49*, 2809−2814.
(34) Pehnt, M.; Henkel, J. Life cycle assessment of carbon dioxide capture and storage from lignite power plants. *Int. J. Greenhouse Gas Control* **2009**, *3*, 49−66.
(35) Singh, D.; Croiset, E.; Douglas, P. L.; Douglas, M. A. Techno-economic study of CO_2 capture from an existing coal-fired power plant: MEA scrubbing vs. O_2/CO_2 recycle combustion. *Energy Convers. Manage.* **2003**, *44*, 3073−3091.
(36) Li, H.; Yan, J.; Anheden, M. Impurity impacts on the purification process in oxy-fuel combustion based CO_2 capture and storage system. *Appl. Energy* **2009**, *86*, 202−213.
(37) Jordan, G.; Rammensee, W. Dissolution rates and activation energy for dissolution of brucite (001): A new method based on the microtopography of crystal surfaces. *Geochim. Cosmochim. Acta* **1996**, *60*, 5055−5062.
(38) Pokrovsky, O. S.; Schott, J.; Castillo, A. Kinetics of brucite dissolution at 25 °C in the presence of organic and inorganic ligands and divalent metals. *Geochim. Cosmochim. Acta* **2005**, *69*, 905−918.
(39) Teir, S.; Eloneva, S.; Zevenhoven, R. Production of precipitated calcium carbonate from calcium silicates and carbon dioxide. *Energy Convers. Manage.* **2005**, *46*, 2954−2979.
(40) Harvey, L. D. D. Mitigating the atmospheric CO_2 increase and ocean acidification by adding limestone powder to upwelling regions. *J. Geophys. Res.* **2008**, *113*, C04028.
(41) Rau, G. H. Electrochemical splitting of calcium carbonate to increase solution alkalinity: Implications for mitigation of carbon dioxide and ocean acidity. *Environ. Sci. Technol.* **2008**, *42*, 8935−8940.
(42) House, K. Z.; House, C. H.; Schrag, D. P.; Aziz, M. J. Electrochemical acceleration of chemical weathering as an energetically feasible approach to mitigating anthropogenic climate change. *Environ. Sci. Technol.* **2007**, *41*, 8464−8470.
(43) American Physical Society (APS). *Direct Air Capture of CO_2 with Chemicals*; APS: College Park, MD, 2011.
(44) Keith, D. W.; Ha-Duong, M.; Stolaroff, J. K. Climate strategy with CO_2 capture from the air. *Clim. Change* **2006**, *74*, 17−45.
(45) Cembureau, the European Cement Association. World cement production by region and main countries. *World Statistical Review, 1999−2009*; Cembureau: Brussels, Belgium, 2009.
(46) Meier, A.; Gremaud, N.; Steinfeld, A. Economic evaluation of the industrial solar production of lime. *Energy Convers. Manage.* **2005**, *46*, 905−926.
(47) Nikulshina, V.; Hirsch, D.; Mazzotti, M.; Steinfeld, A. CO_2 capture from air and co-production of H_2 via the $Ca(OH)_2$−$CaCO_3$ cycle using concentrated solar power—Thermodynamic analysis. *Energy* **2006**, *31*, 1715−1725.
(48) Berry, P.; Pistocchi, A. A multicriterial geographical approach for the environmental impact assessment of open-pit quarries. *Int. J. Surf. Min., Reclam. Environ.* **2003**, *17*, 213−226.
(49) Pless-Mulloli, T.; King, A.; Howel, D.; Stone, I.; Merefield, J. PM10 levels in communities close to and away from opencast coal mining sites in northeast England. *Atmos. Environ.* **2000**, *34*, 3091−3101.
(50) Queensland Government. *Code of Environmental Compliance for Mining Lease Projects*; Environmental Protection Agency, Department of Mines and Energy: Brisbane, Queensland, Australia, 2001.
(51) Rostron, J.; Parry, J. The law and technique of environmental impact assessment in the United Kingdom. *Environ. Qual. Manage.* **2008**, *17*, 11−29.
(52) Stubblefield, A.; Chandra, S.; Eagan, S.; Tuvshinjargal, D.; Davaadorzh, G.; Gilroy, D.; Sampson, J.; Thorne, J.; Allen, B.; Hogan, Z. Impacts of gold mining and land use alterations on the water quality of central Mongolian rivers. *Integr. Environ. Assess. Manage.* **2005**, *1*, 365−373.
(53) Gagliardi, J.; Lee, C. A. Material and system for minimizing erosion. U.S. Patent 4,279,535, 1981.
(54) Zipper, C.; Burger, J.; Skousen, J.; Angel, P.; Barton, C.; Davis, V.; Franklin, J. Restoring forests and associated ecosystem services on Appalachian coal surface mines. *Environ. Manage.* **2011**, *47*, 751−765.
(55) Mutlu, S.; Atici, O.; Gulen, Y. Cement dust pollution induces toxicity or deficiency of some essential elements in wild plants growing around a cement factory. *Toxicol. Ind. Health* **2012**, 1−7.
(56) Rau, G. H.; Knauss, K. G.; Langer, W. H.; Caldeira, K. Reducing energy-related CO_2 emissions using accelerated weathering of limestone. *Energy* **2007**, *32*, 1471−1477.
(57) United Nations Environment Programme (UNEP). *Impacts of Climate Related Geoengineering on Biological Diversity*; Convention on Biological Diversity, UNEP: Nairobi, Kenya, 2012.
(58) International Marine Organisation (IMO). *Protocol to the 1972 Convention on the Prevention of Marine Pollution by Dumping of Wastes and Other Matter*; IMO: London, U.K., 1996.
(59) Rau, G. H.; McLeod, E. L.; Hoegh-Guldberg, O. The need for new ocean conservation strategies in a high-carbon dioxide world. *Nat. Clim. Change* **2012**, *2*, 720−724.
(60) Fabry, V. J.; Seibel, B. A.; Feely, R. A.; Orr, J. C. Impacts of ocean acidification on marine fauna and ecosystem processes. *ICES J. Mar. Sci.* **2008**, *65*, 414−432.