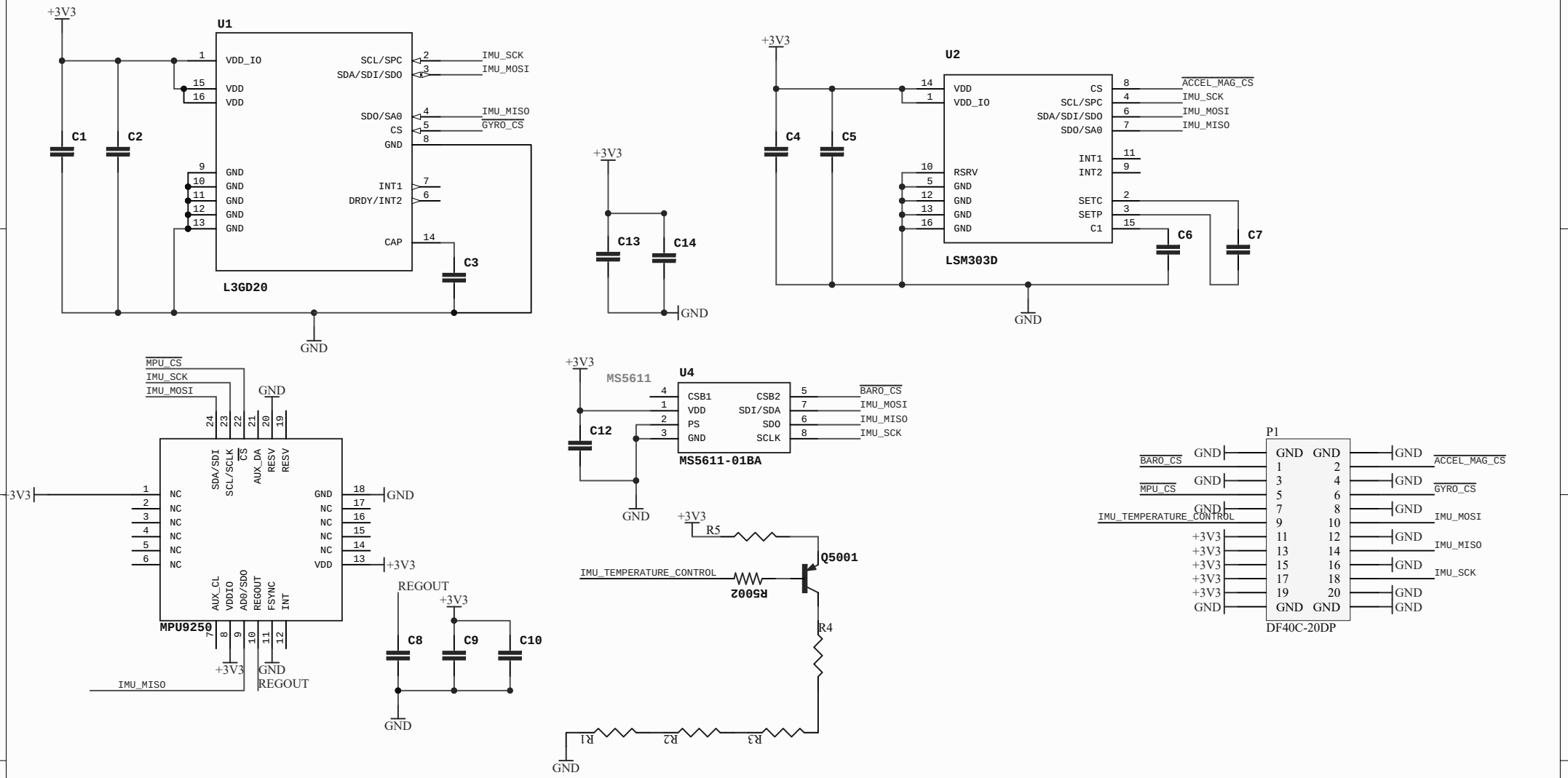

The PCB Design files are NOT released! do not assume that you have ANY rights to these files.

Licence CC-BY-NC 3.0 YOU MUST CONTACT PHILIP ROWSE BEFORE USING THIS IN A PRODUCT YOU SELL
Drawing is copyright Philip Rowse

Title *IMU For The CUBE*			*Proficnc Black Hill Ballarat Victoria 3350 Australia*
Size: A4	Number:*	Revision:3	
Date: 24/05/2018	Time: 12:12:50 PM	Sheet 1 of 1	
File: E:\Git\The-Cube\IMU\IMU_REV_1A.SchDoc			