STV Project, PART 1

Course Software Testing & Verification

2025/26

Rogue / Nethack

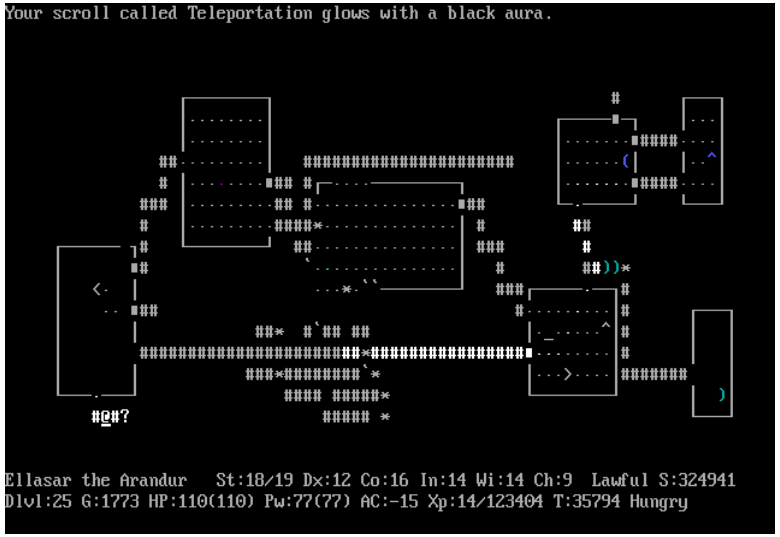

STV Rogue

- Single player
- Turn-based (so... not real time)
- Command-line-based application

```
_______ _________          _______  _______  _______          _______
(  ____ \\__   __/|\     /|(  ____ )(  ___  )(  ____ \|\     /|(  ____ \
| (    \/   ) (   | )   ( || (    )|| (   ) || (    \/| )   ( || (    \/
| (_____    | |   | |   | || (____)|| |   | || |      | |   | || (__
(_____  )   | |   ( (   ) )|     __)| |   | || | ____ | |   | ||  __)
      ) |   | |    \ \_/ / | (\ (   | |   | || | \_  )| |   | || (
/\____) |   | |     \   /  | ) \ \__| (___) || (___) || (___) || (____/\
\_______)   )_(      \_/   |/   \__/(_______)(_______)(_______)(_______/
Welcome stranger...
You are in the room R0. It is dark, and it feels dangerous...
There are corridors leading to rooms R1 and R2.
Your action: Move(m)   | Pick-item(p)  | Do-nothing(SPACE) | Quit(q)
             Attack(a) |    Flee(f)    | Use-item(u)
```

STV Rogue: played on a dungeon

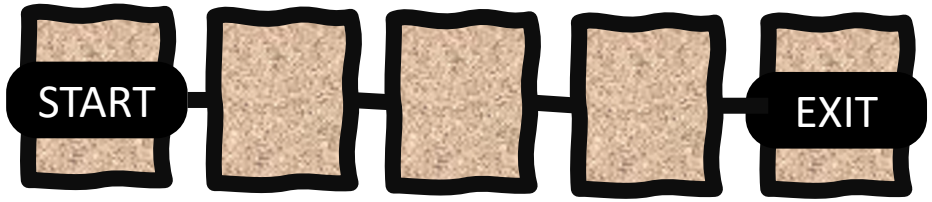

linear dungeon

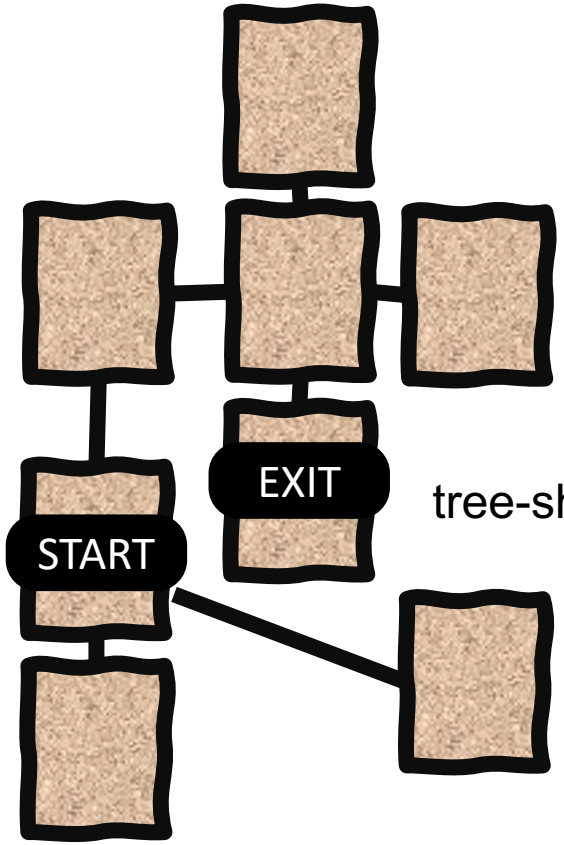

tree-shaped dungeon

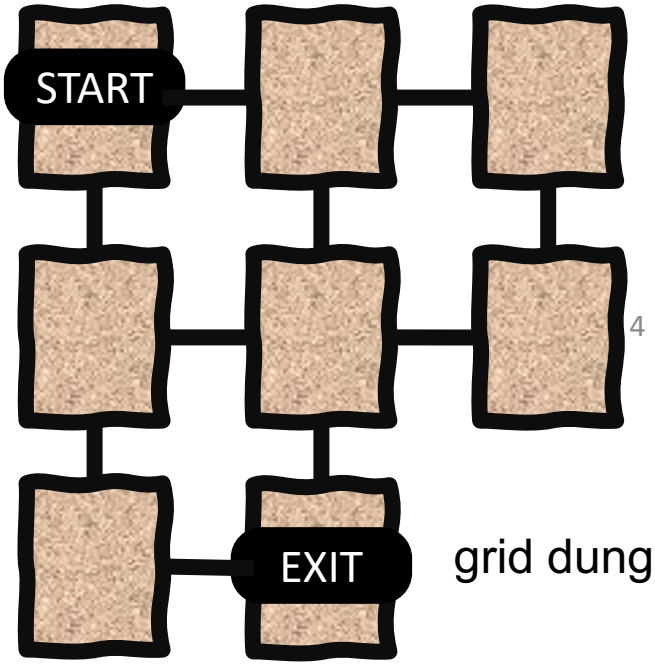

grid dungeon

Architecture

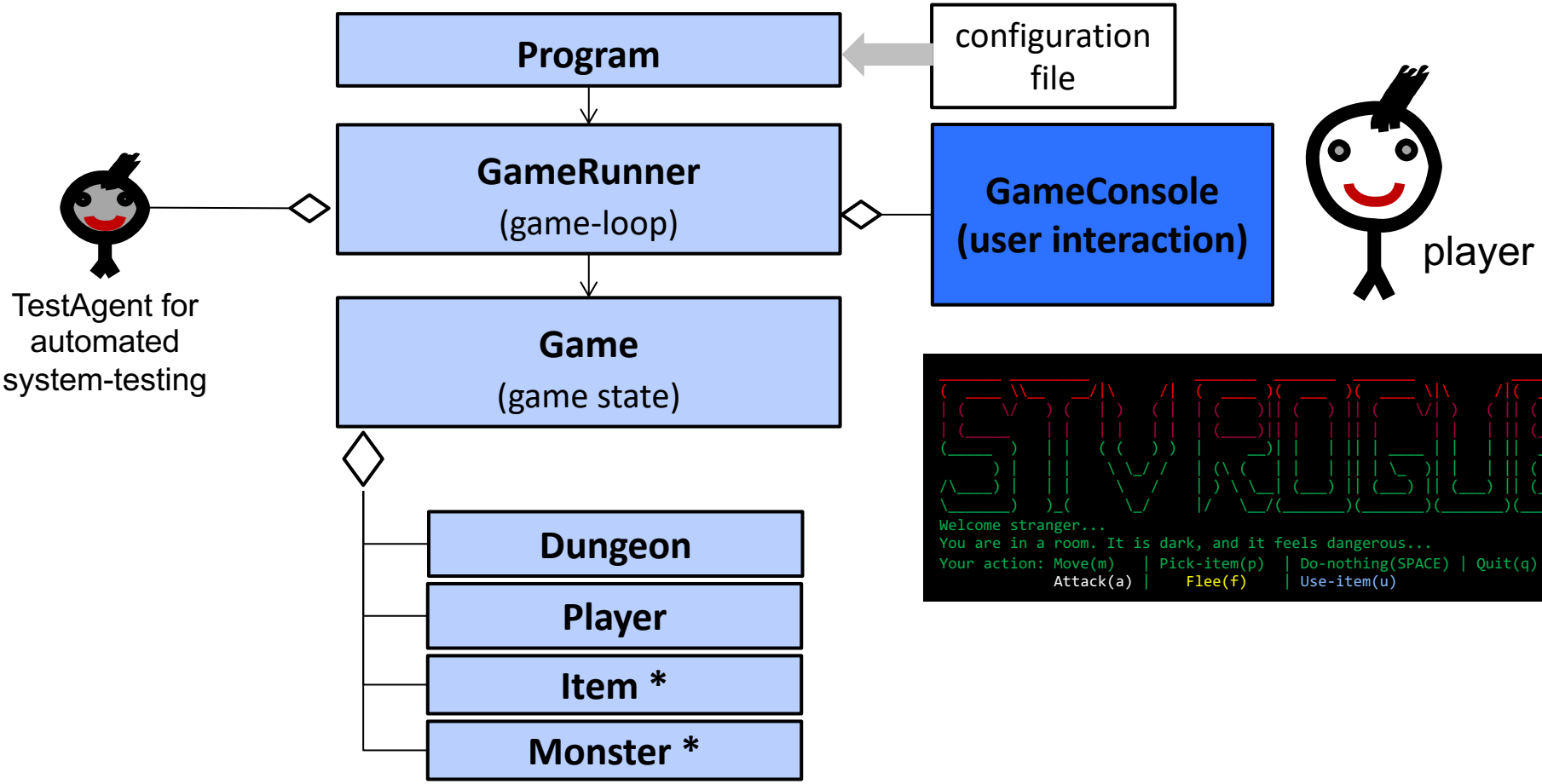

(**Entities** : no I/O)

Goals

- Development of the game logic and unit testing.
- Deliver a working game.
- System-level testing.
- Stick with simple user interface!
- Deliverables:
  - Implementation + unit testing + basic system-testing + report (9 pt)
  - Optional: stronger system-testing (1pt)

Other things

- Team size 3
- Team registration in MSTeam: General > Files > “TEAMS registration.xlsx”

  Do it today. If you don’t have a team, put your name in the “looking for team” column; we will put you in a team.