Node Embeddings in Early Modern Edition Networks

Hassan El-Hajj

Max Planck Institute for the History of Science

BIFOLD

What exactly are *Edition Networks* ?

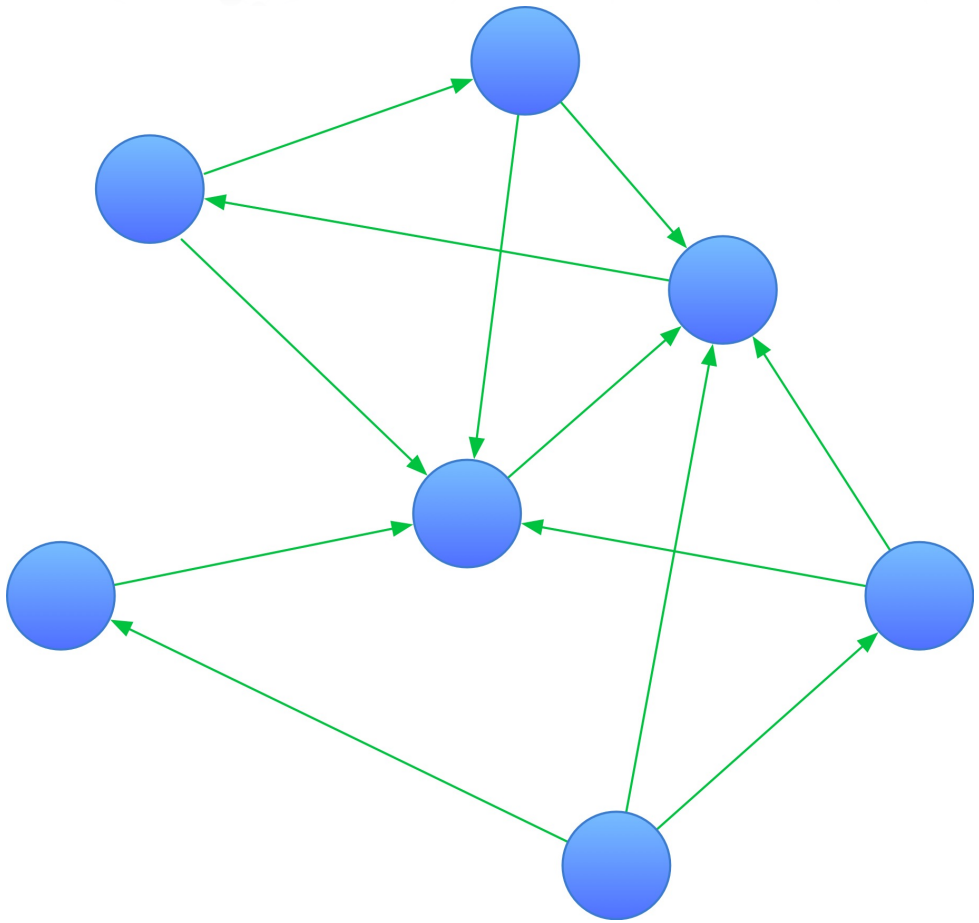

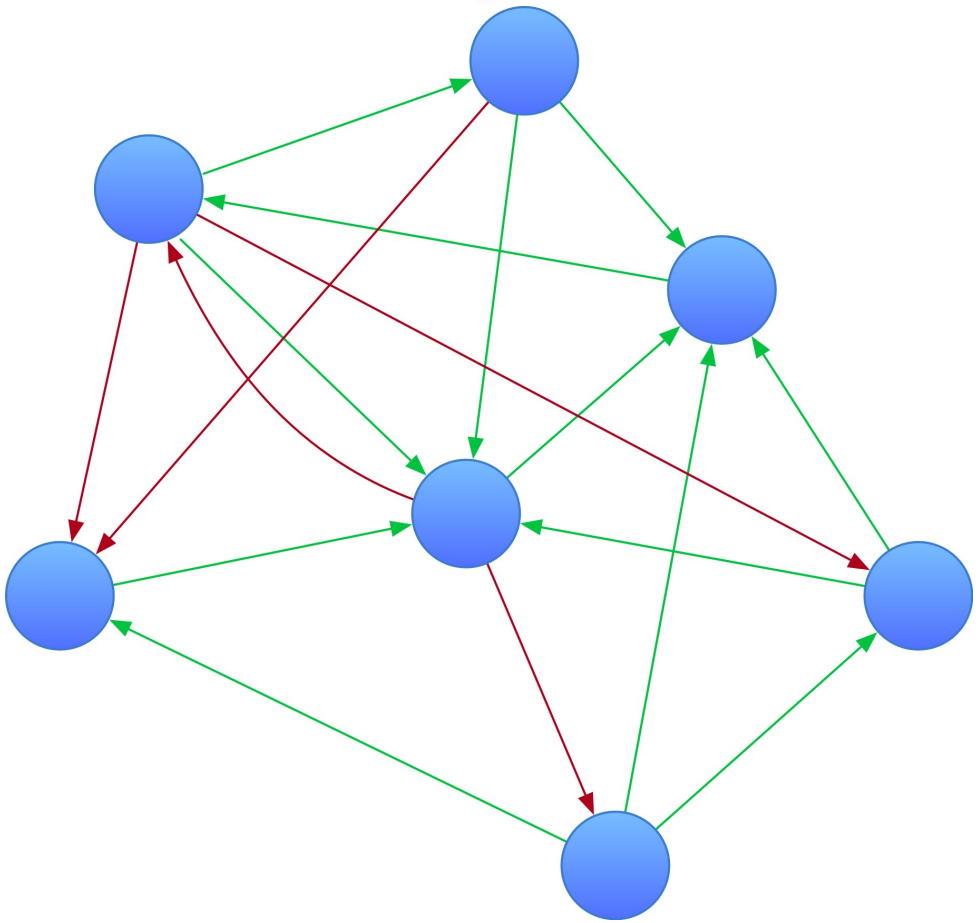

What exactly are *Edition Networks* ?

- Each layer is constructed based on a different set of verified historical information.
- Each layer can have a maximum of 359 Nodes.
- Layer architecture changes with each timestep.

PRIMVM

Q uod aqua sit rotunda

Radius visualis

Sacrobosco, Johannes de, Pierre d'Ailly, Francesco Capuano, Robert Grosseteste, Jacques Lefèvre d'Etaples, Joannes Regiomontanus, Georg von Peurbach, and Bartolomeo Vespucci. *Nota eorum quæ in hoc libro continentur… Textvs Sphaerae Ioannis De Sacro Bvsto.* Venice: Joannes Ruberus and Bernardinus Vercellensis for Giunta, 1508, p. 12r.

What exactly are *Edition Networks* ?

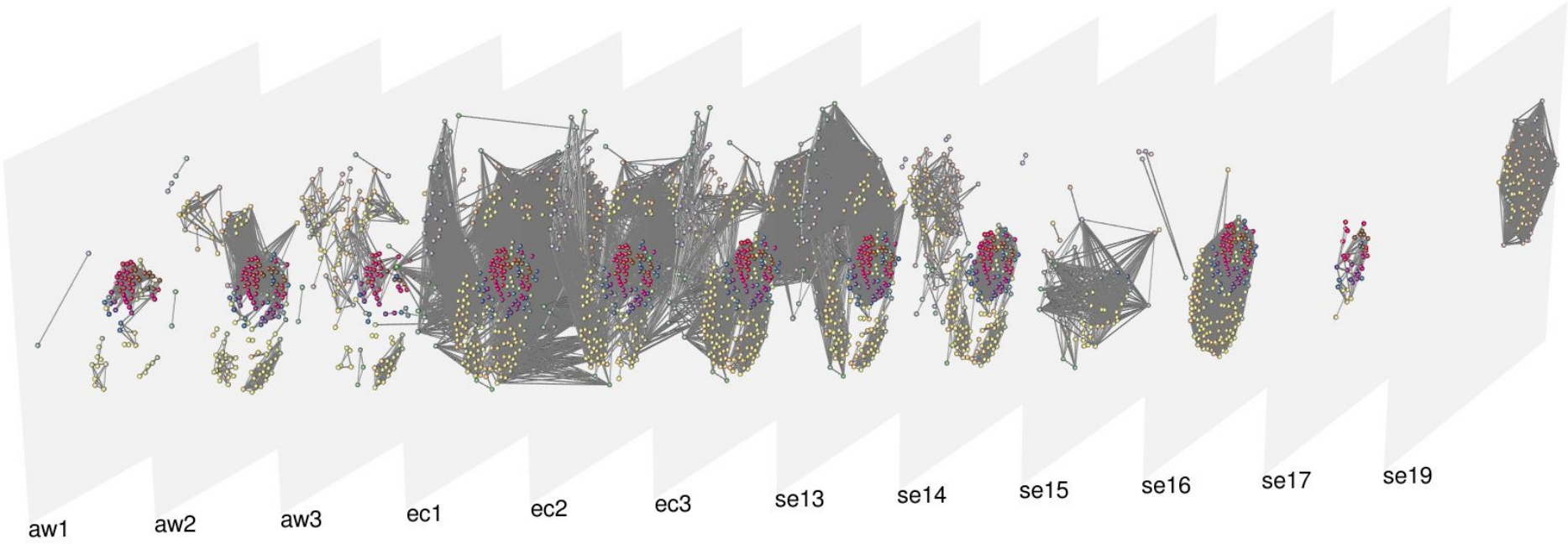

Visualization by means of muxViz. De Domenico, Manlio, Mason A. Porter, Alex Arenas, “MuxViz: A Tool for Multilayer Analysis and Visualization of Networks.” *Journal of Complex Networks* 3, no. 2 (2015): 159–76,

What do we already know

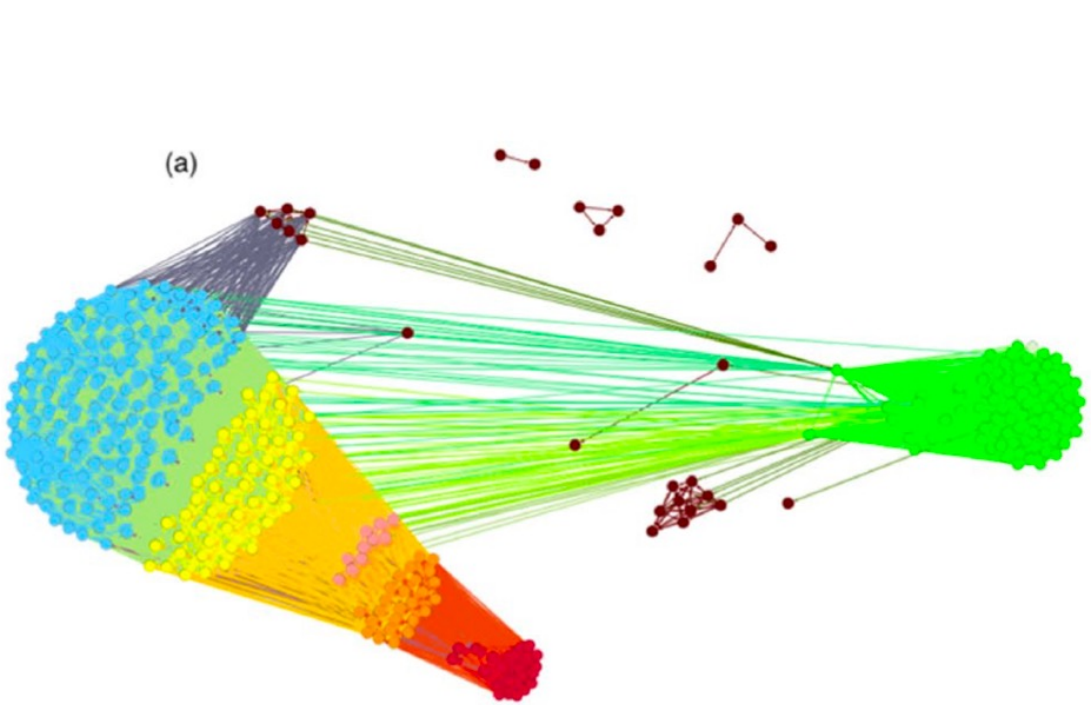

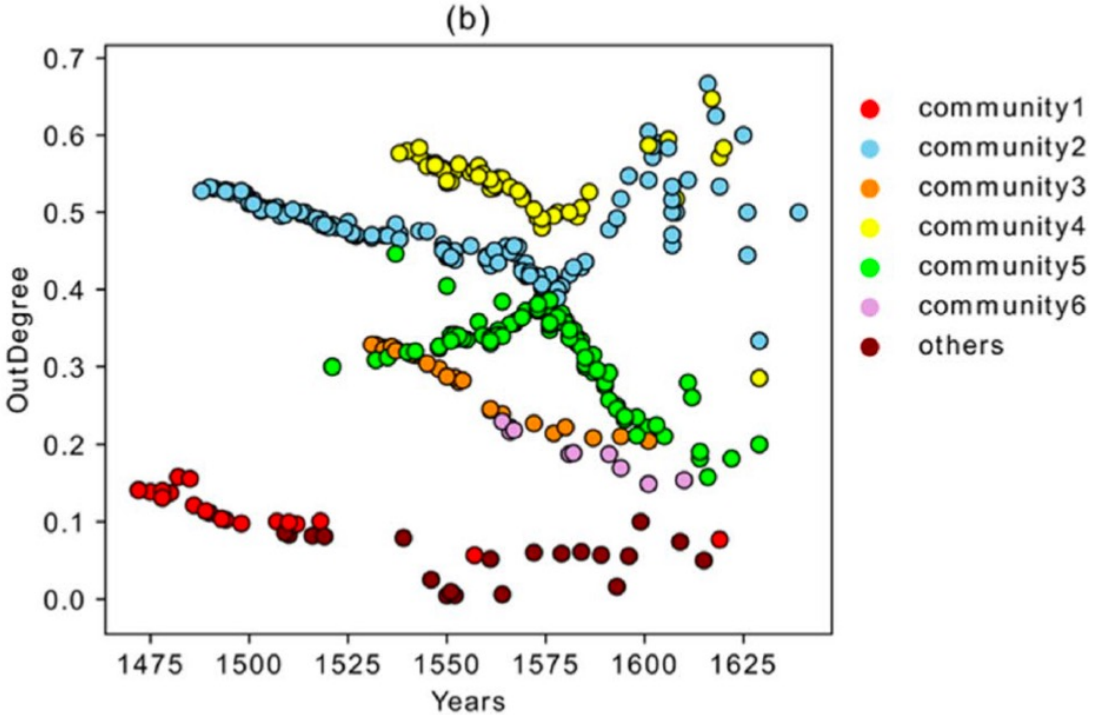

Zamani, M., Tejedor, A., Vogl, M. *et al.* Evolution and transformation of early modern cosmological knowledge: a network study. *Sci Rep* **10,** 19822 (2020).

Node Embeddings using **Node2Vec**

$$\alpha_{pq}(t,x) = \begin{cases} \frac{1}{p} & \text{if } d_{tx} = 0 \\ 1 & \text{if } d_{tx} = 1 \\ \frac{1}{q} & \text{if } d_{tx} = 2 \end{cases}$$

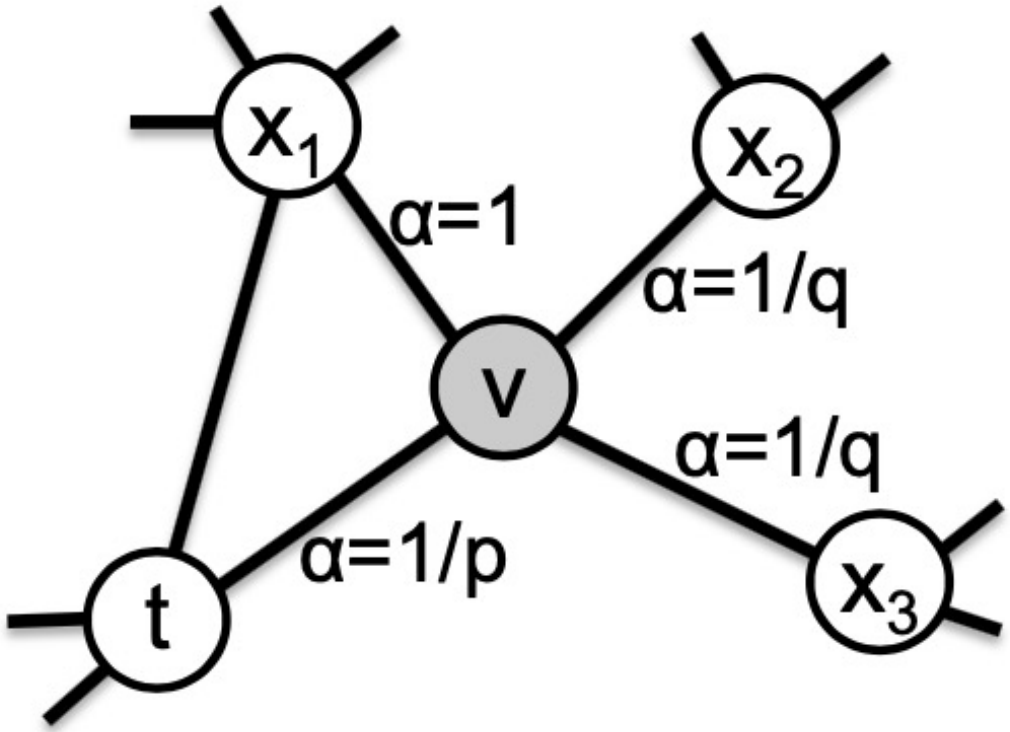

Grover, A. and Leskovec, J. Node2vec: Scalable Feature Learning for Networks, *ACM SIGKDD International Conference on Knowledge Discovery and Data Mining (KDD)*, 2016.

Node Embeddings using **Node2Vec**

- Each node embedding is equal to the d-dimentional weight vector from the trained *skip-gram* network.

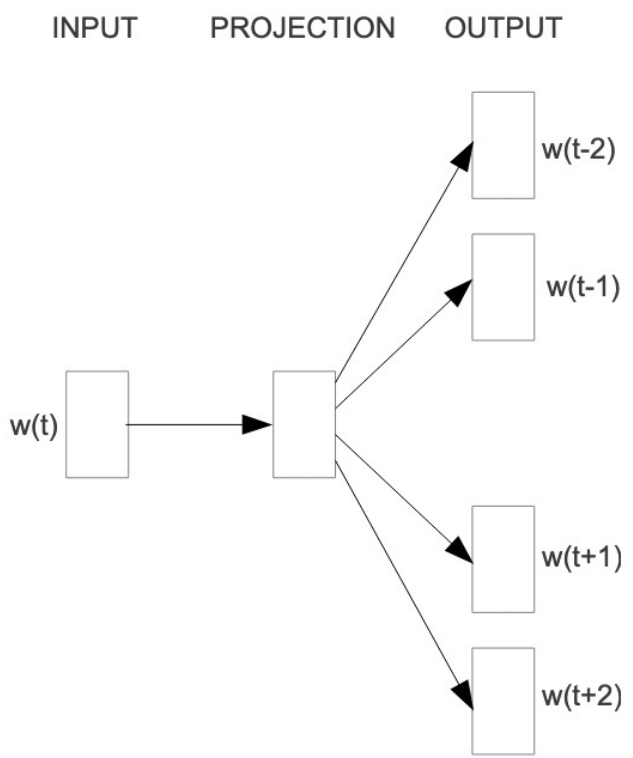

Skip-gram

Mikilov, T., Chen, K, Corrado, G, and Dean, J. Efficient Estimation of Word Representations in Vector Space, *ICLR*, 2013

Node Structural Similarity vs Node Communities

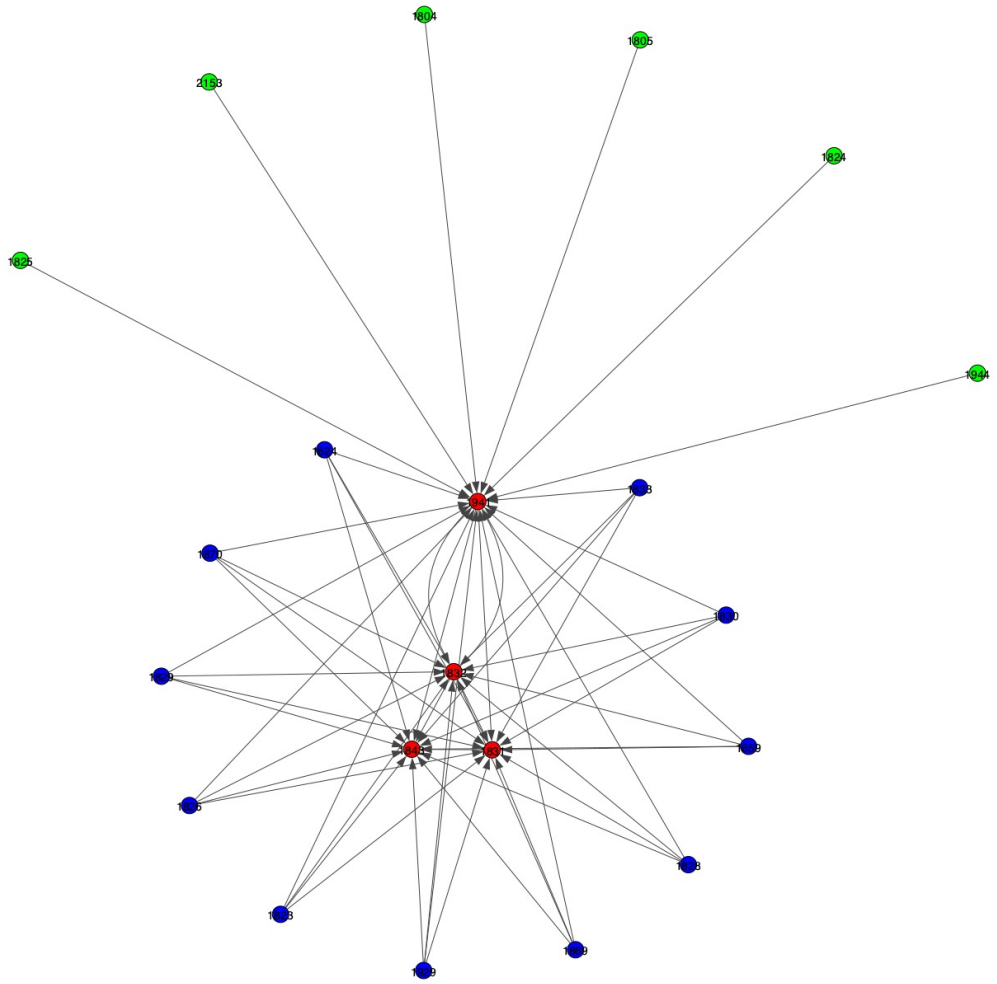

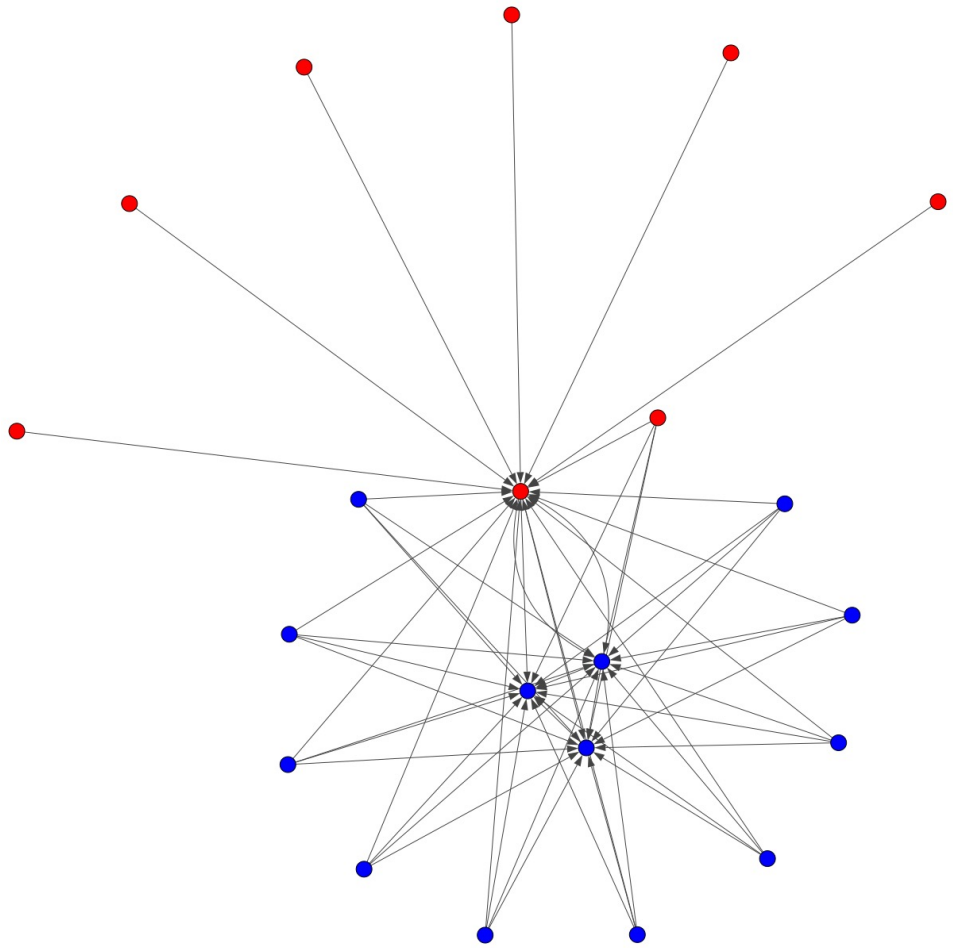

Node Structural Similarity vs Node Communities

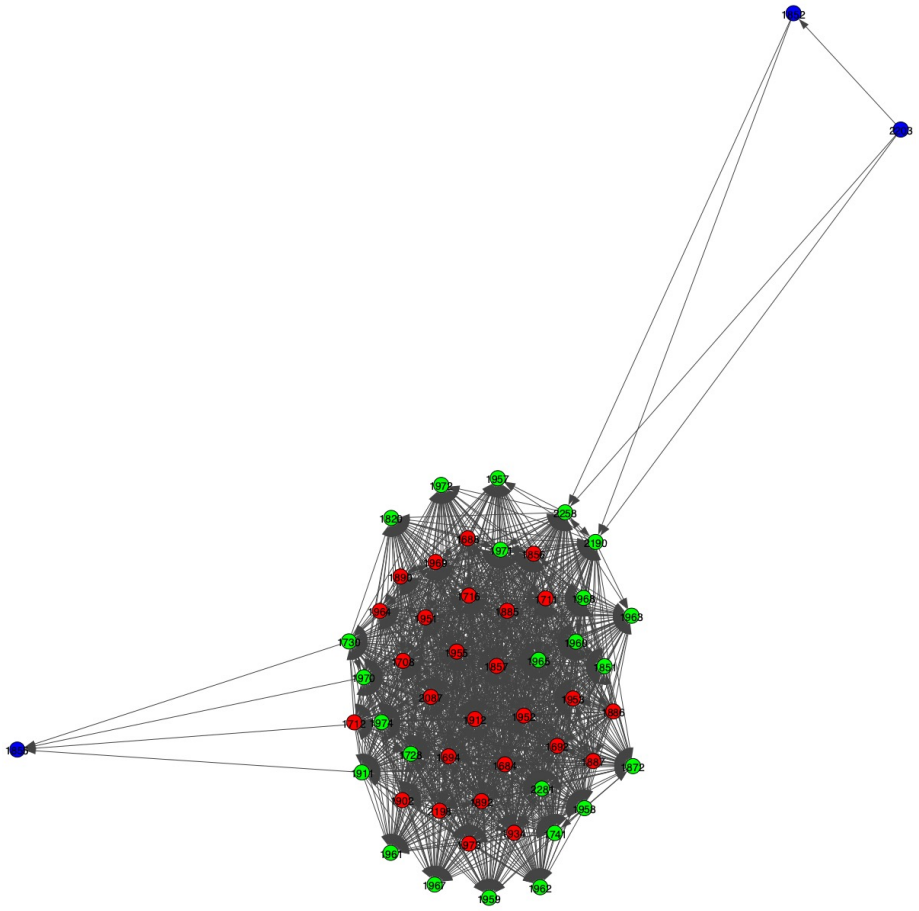

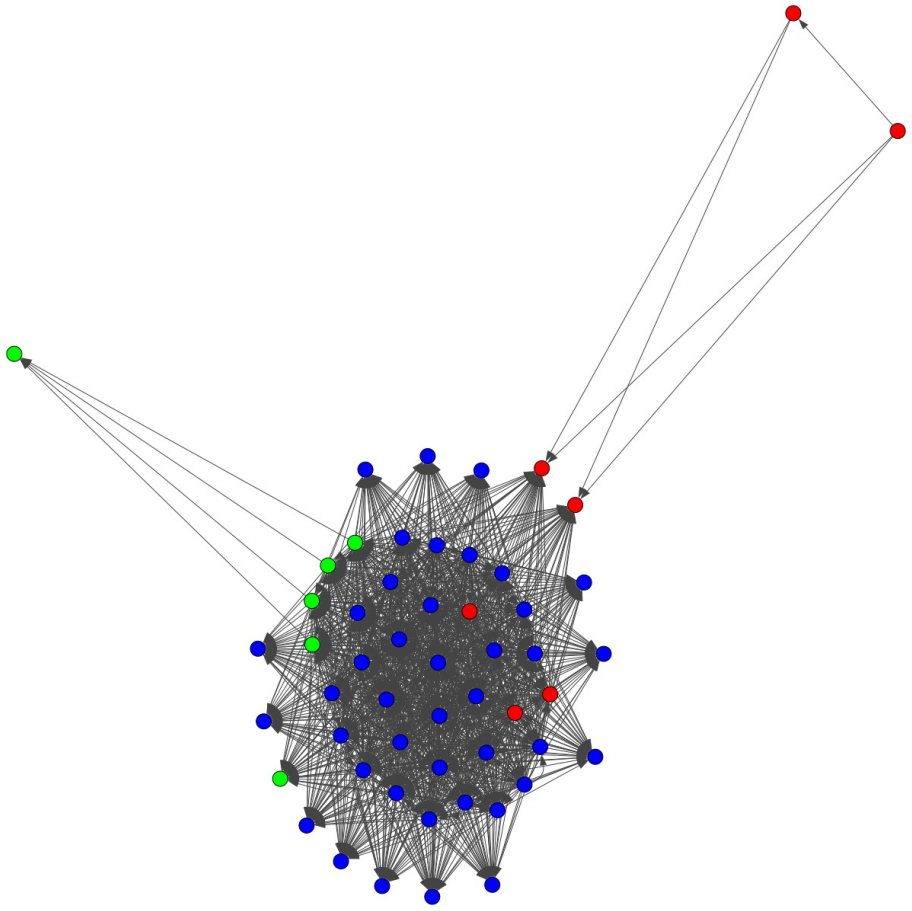

Sphaera and the Great Transmitters

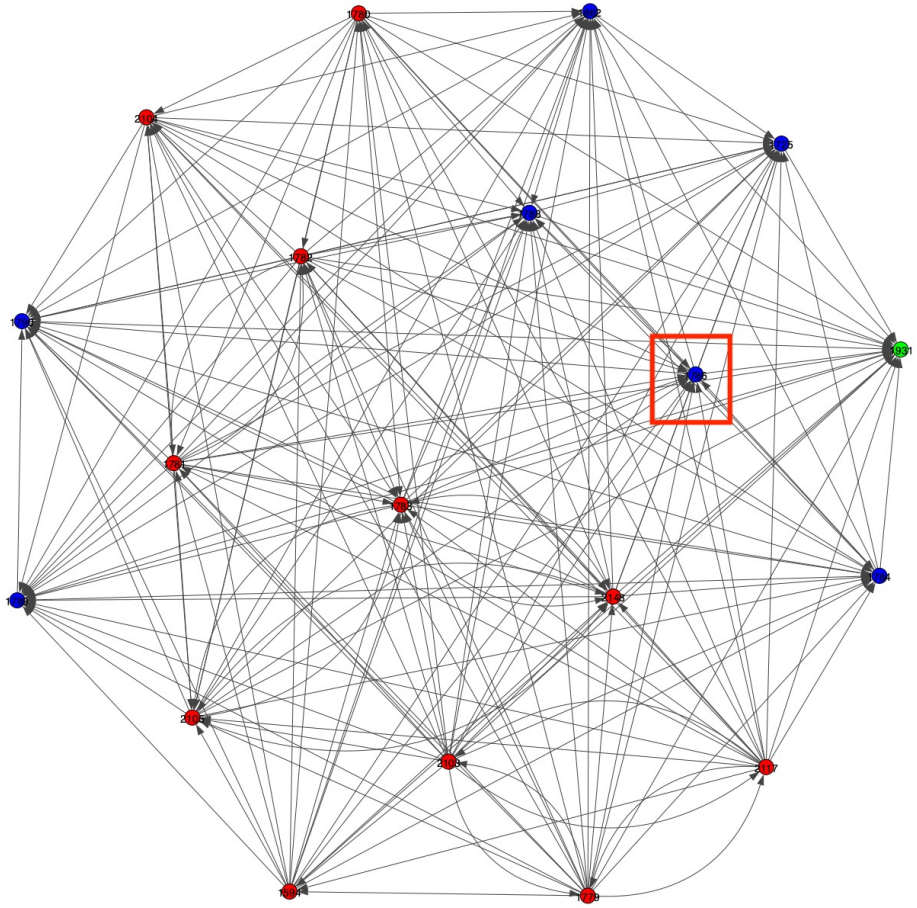

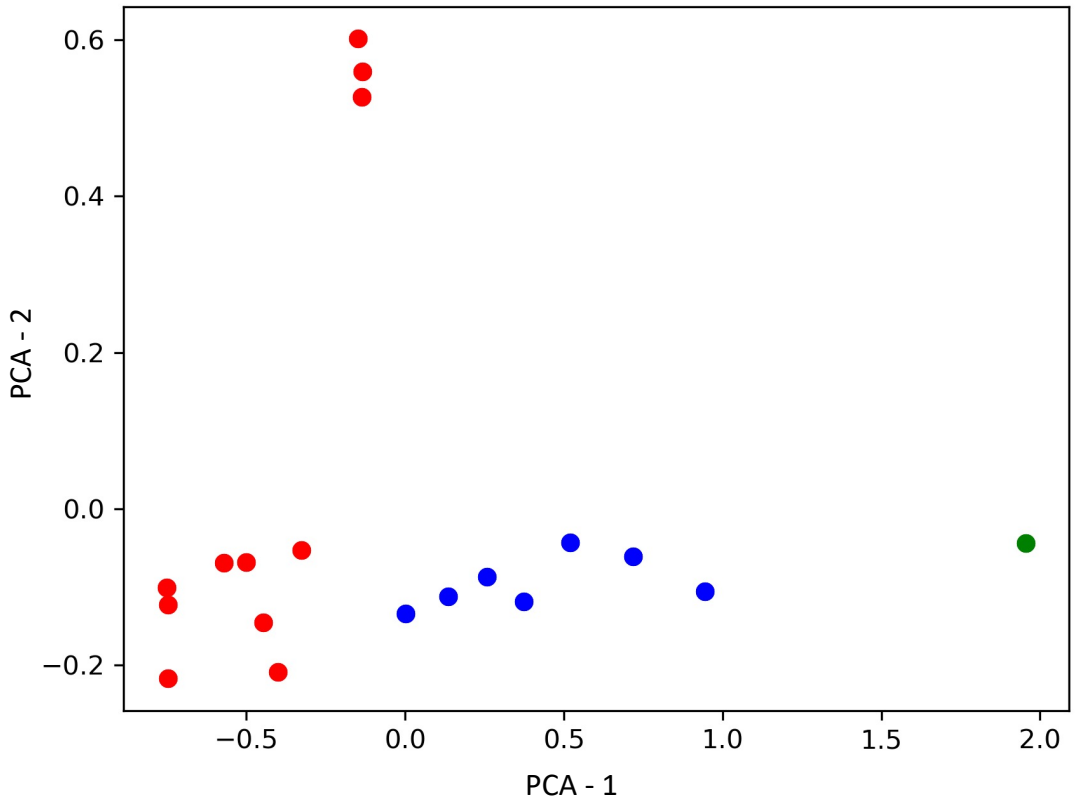

A look forward

- Too much data for Humanities, too little data for ML.
- It takes a large amount of rigorous historical work to create the network.
- Do such network structures generalise to other Early modern corpora ?

Can we predict, over time, the next *Great Transmitter* book candidate ?