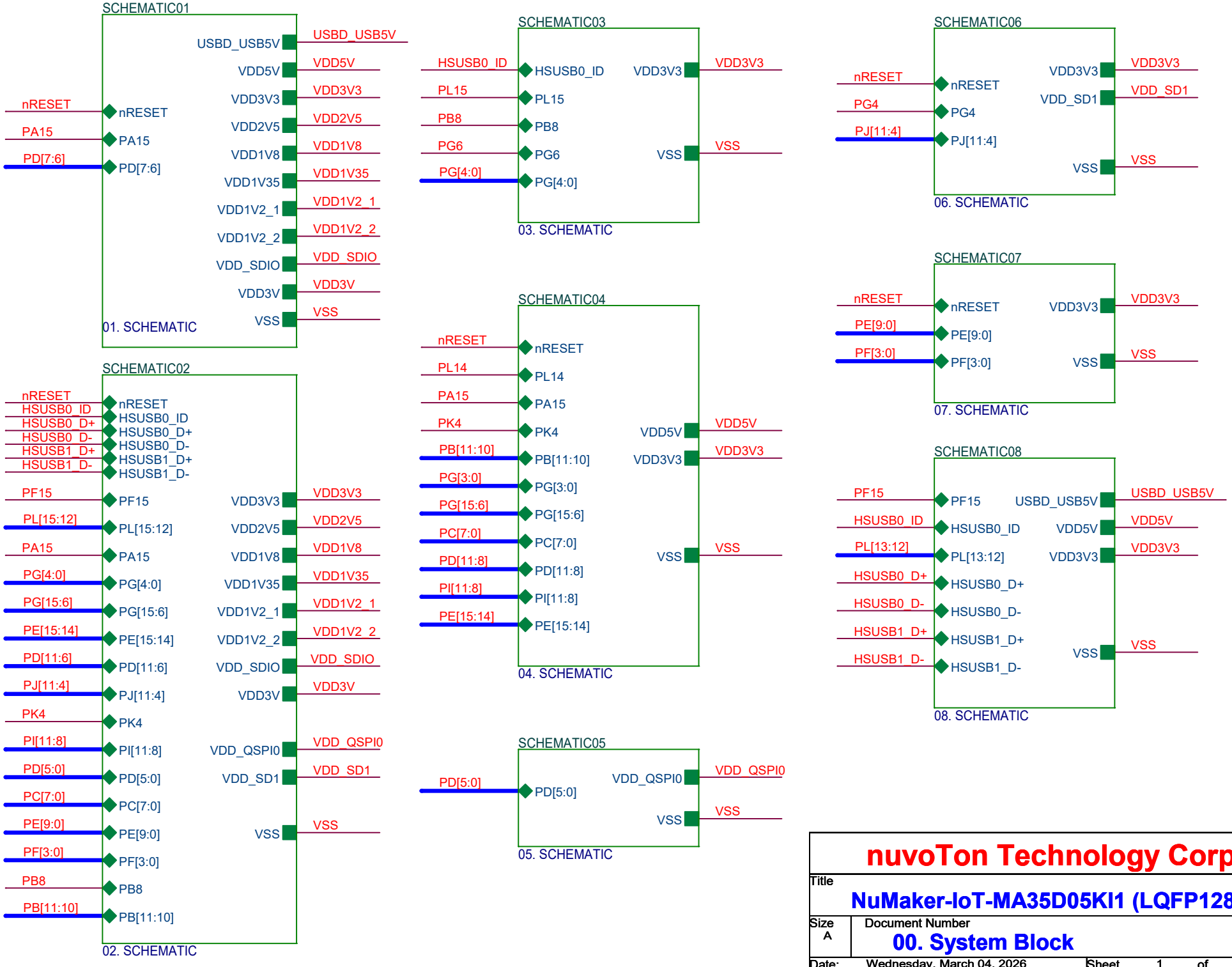

nuvoTon Technology Corp.

Title	**NuMaker-IoT-MA35D05KI1 (LQFP128)**	
Size A	Document Number **00. System Block**	Rev V1.0
Date: Wednesday, March 04, 2026	Sheet 1 of 9	

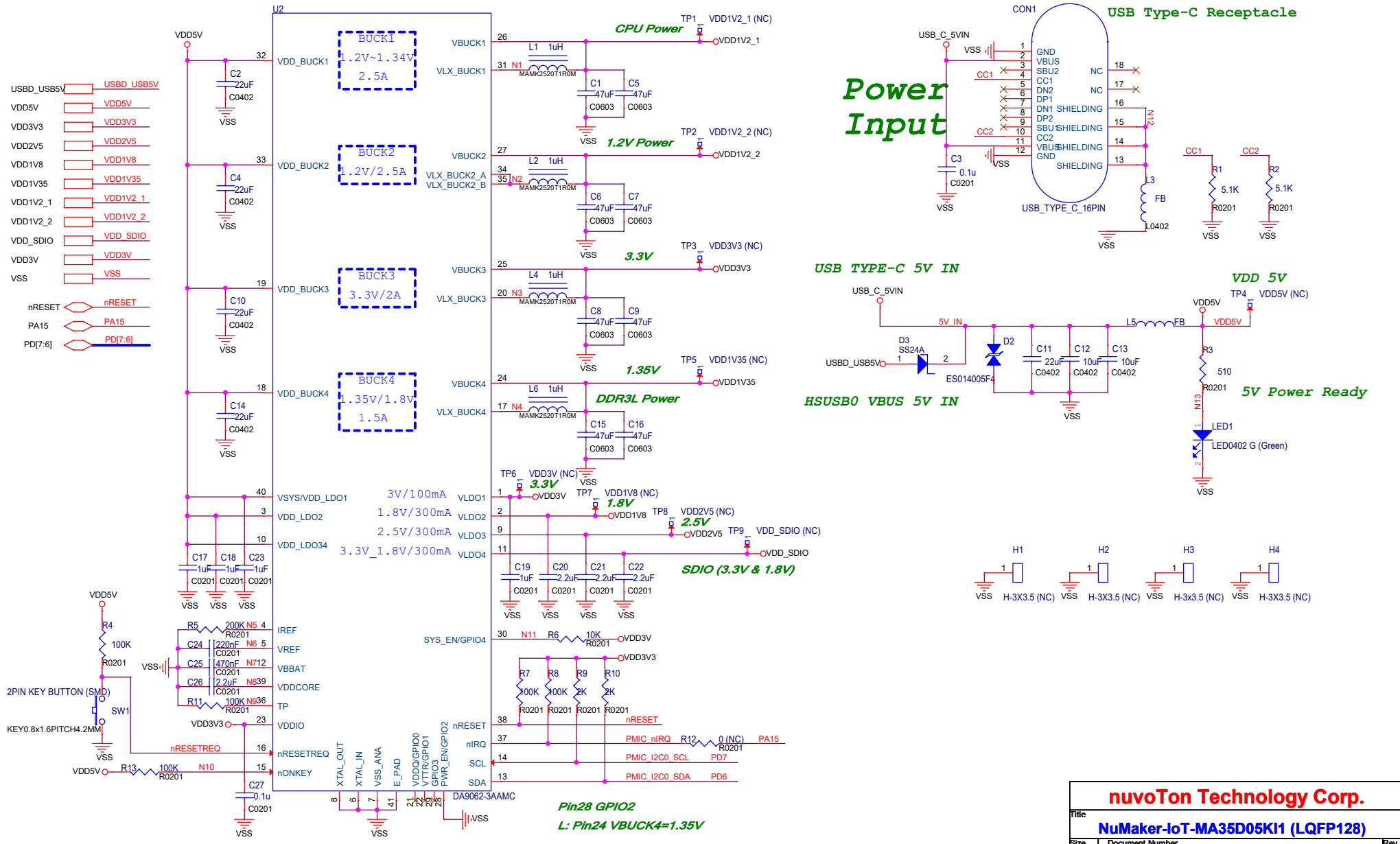

nuvoTon Technology Corp.

Title: NuMaker-IoT-MA35D05KI1 (LQFP128)

Size: B | Document Number: 01. Power | Rev: V1.0

Date: Wednesday, March 04, 2026 | Sheet 2 of 9

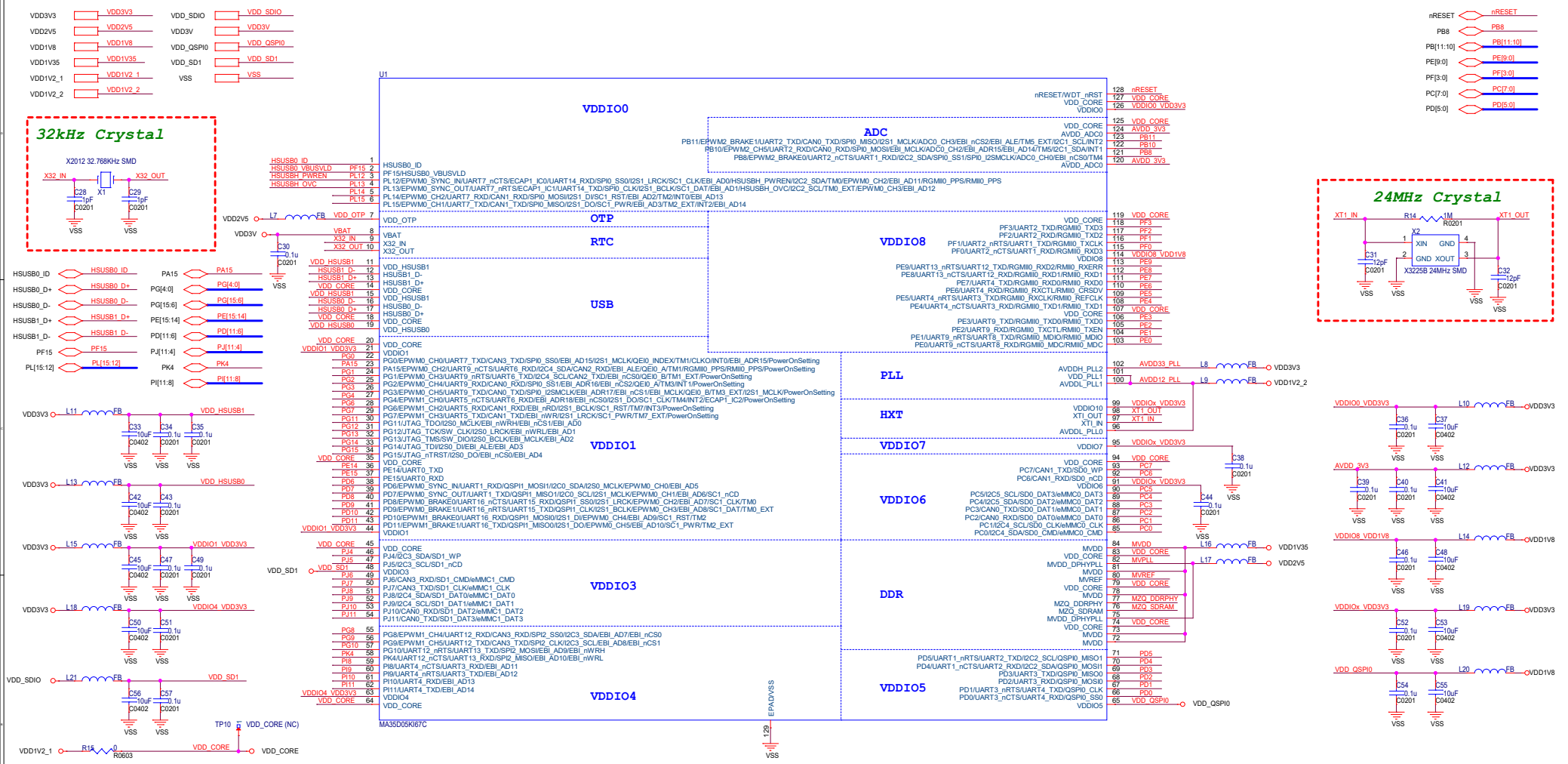

nuvoTon Technology Corp.

Title: NuMaker-IoT-MA35D05KI1 (LQFP128)

Size: C | Document Number: 02. MPU Main Chip | Rev: V1.0

Date: Wednesday, March 04, 2026 | Sheet 3 of 9

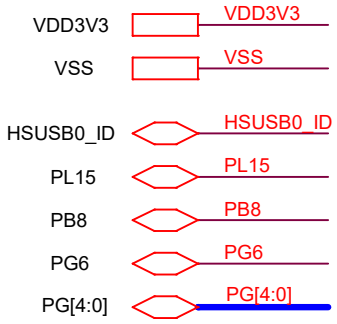

Power-on Setting

PG0	Secure Boot
L	Secure Boot Enable
H	Secure Boot Disable

PG1	Boot Source QSPI0, SD/eMMC I/O Voltage
L	3.3V
H	1.8V

PG3	PG2	Boot Source
L	L	QSPI0 Flash
L	H	SD/eMMC
H	L	NAND Flash
H	H	USB

PG6	Booting from SD/eMMC
L	SD0/eMMC0 booting
H	SD1/eMMC1 booting

PG4	Booting from USB
L	USBD booting
H	USBH booting

PG6	Booting from USBH
L	Over-current low-active detect
H	Over-current high-active detect

PG0~PG7: Internal pull-down

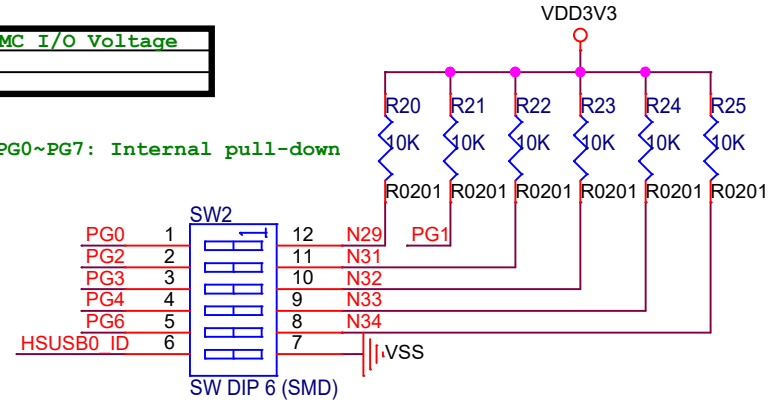

HSUSB0_ID	HSUSB0
L	Host
H	Device

Key Button

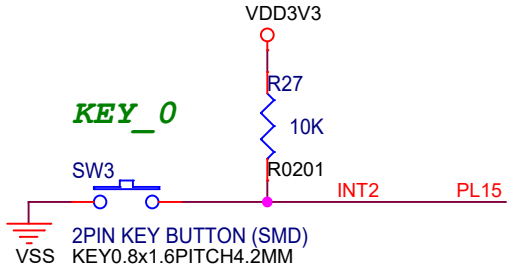

LED

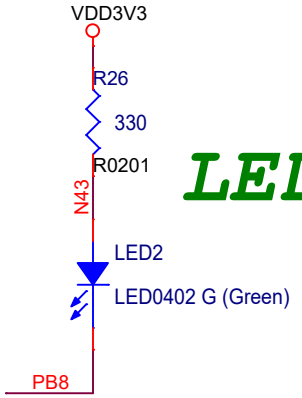

nuvoTon Technology Corp.		
Title	NuMaker-IoT-MA35D05KI1 (LQFP128)	
Size A	Document Number 03. Power-on Setting, Key Button and LED	Rev V1.0
Date: Wednesday, March 04, 2026	Sheet 4 of 9	

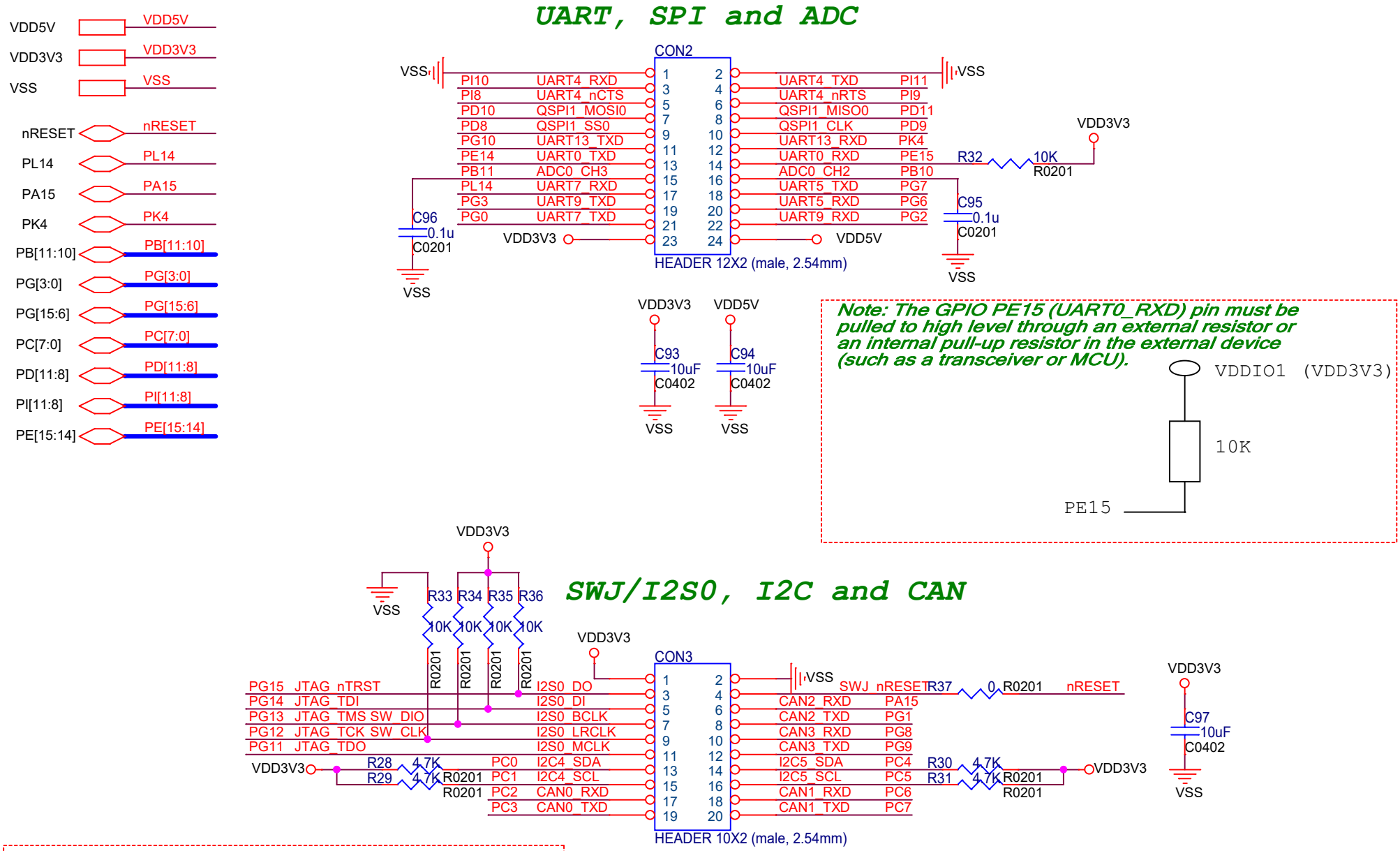

nuvoTon Technology Corp.

Title: NuMaker-IoT-MA35D05KI1 (LQFP128)

Size: A | Document Number: 04. GPIO Connectors | Rev: V1.0

Date: Wednesday, March 04, 2026 | Sheet 5 of 9

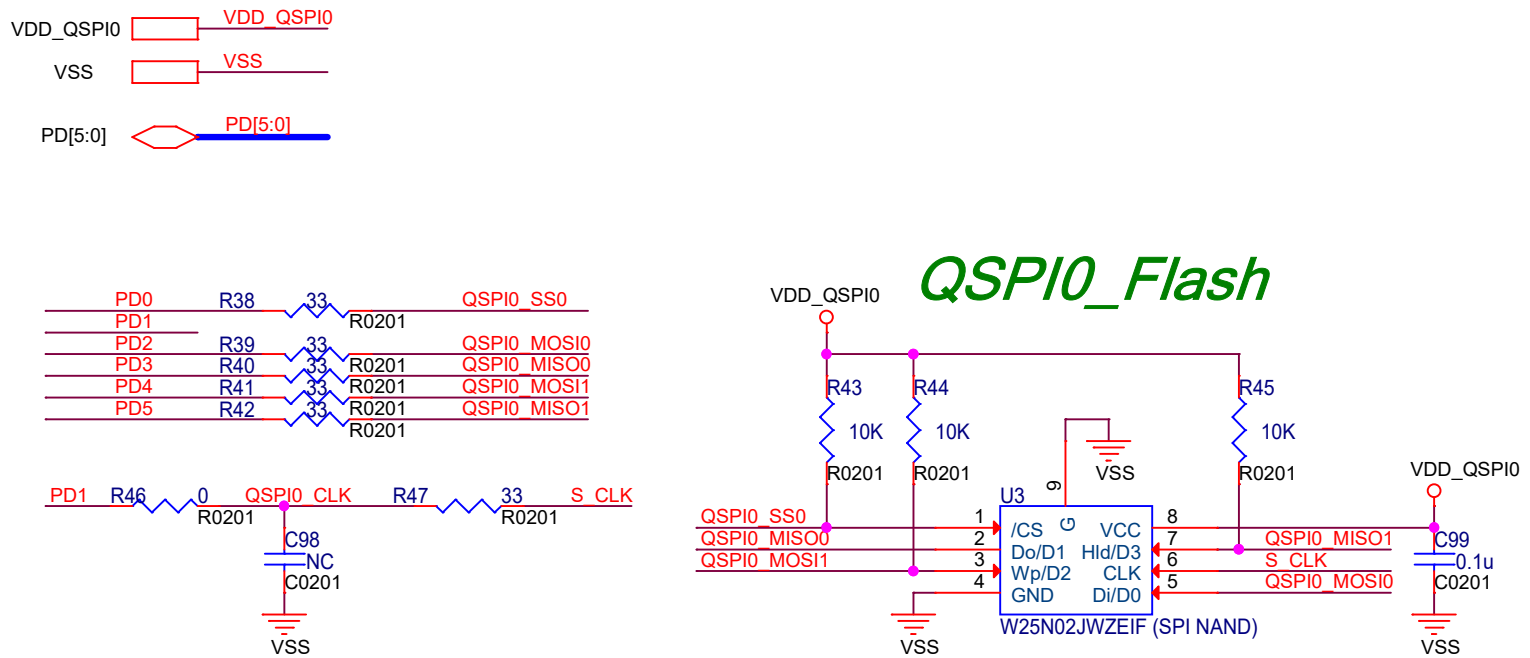

nuvoTon Technology Corp.			
Title	**NuMaker-IoT-MA35D05KI1 (LQFP128)**		
Size A	Document Number **05. QSPI0 (VDDIO5)**		Rev V1.0
Date: Wednesday, March 04, 2026	Sheet 6 of 9		

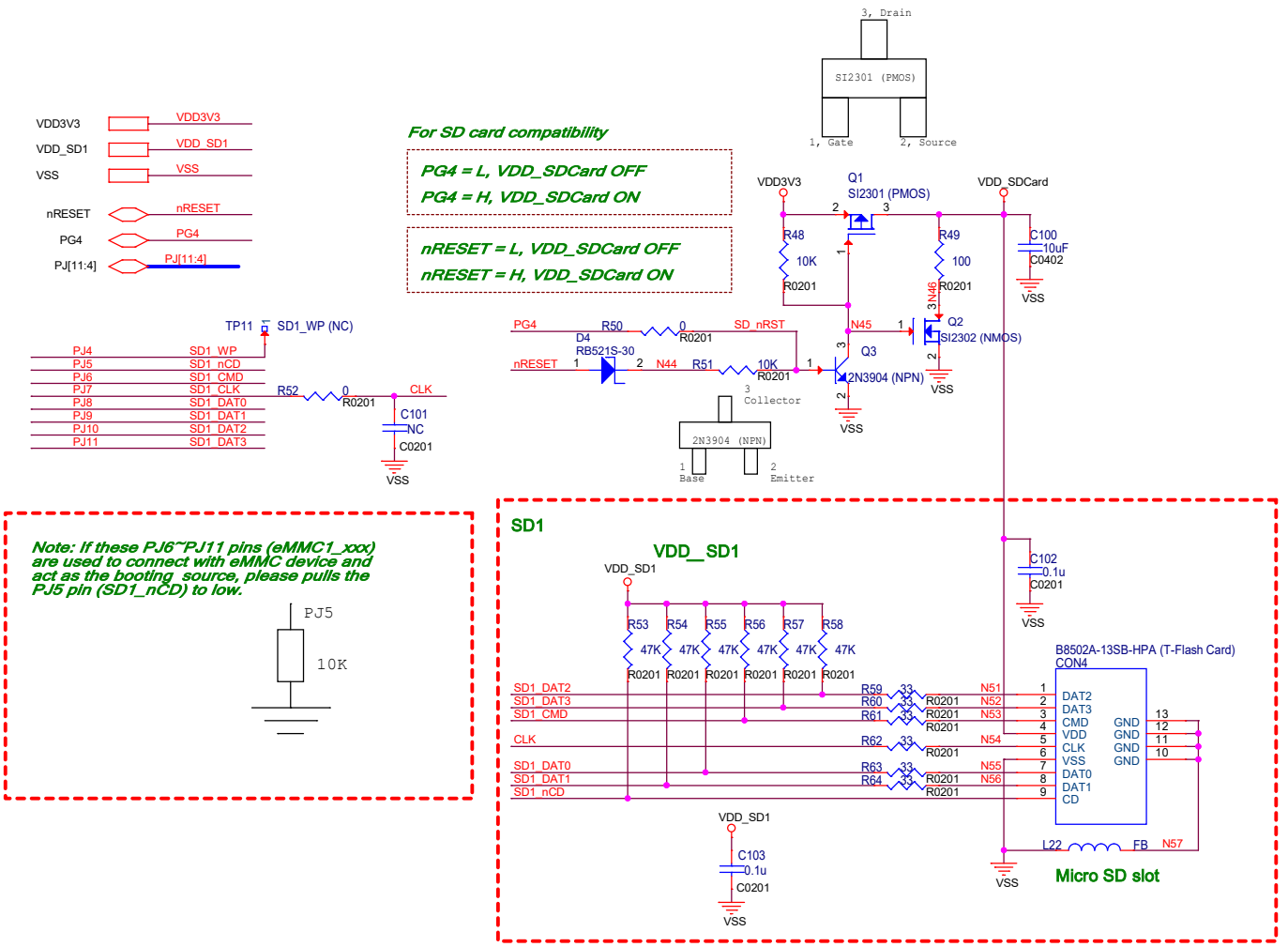

nuvoTon Technology Corp.	
Title	NuMaker-IoT-MA35D05KI1 (LQFP128)
Size B	Document Number 06. SD1 (VDDIO3)
Rev	V1.0
Date: Wednesday, March 04, 2026	Sheet 7 of 9

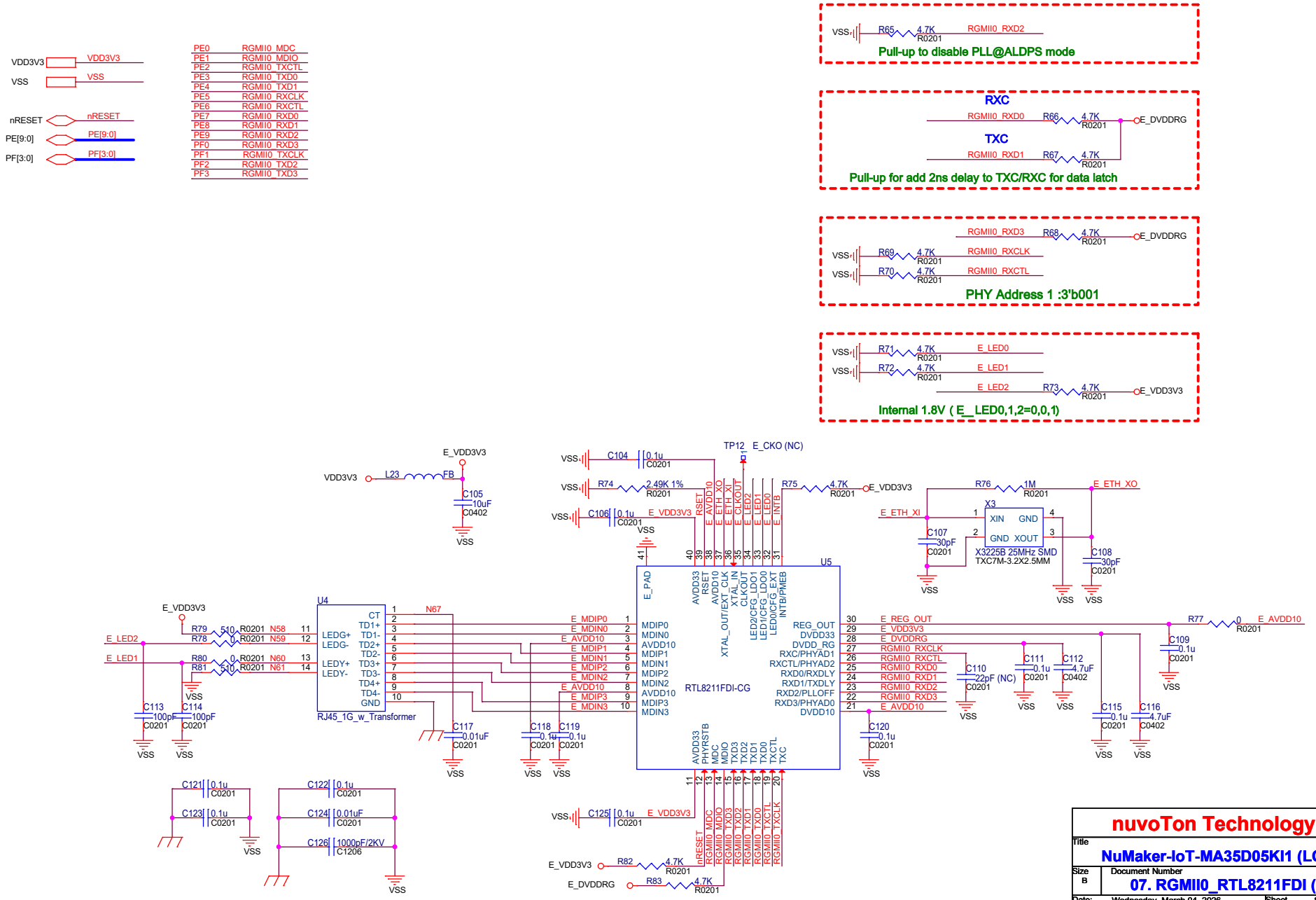

nuvoTon Technology Corp.

Title: NuMaker-IoT-MA35D05KI1 (LQFP128)

Size: B | Document Number: 07. RGMII0_RTL8211FDI (VDDIO8) | Rev: V1.0

Date: Wednesday, March 04, 2026 | Sheet 8 of 9

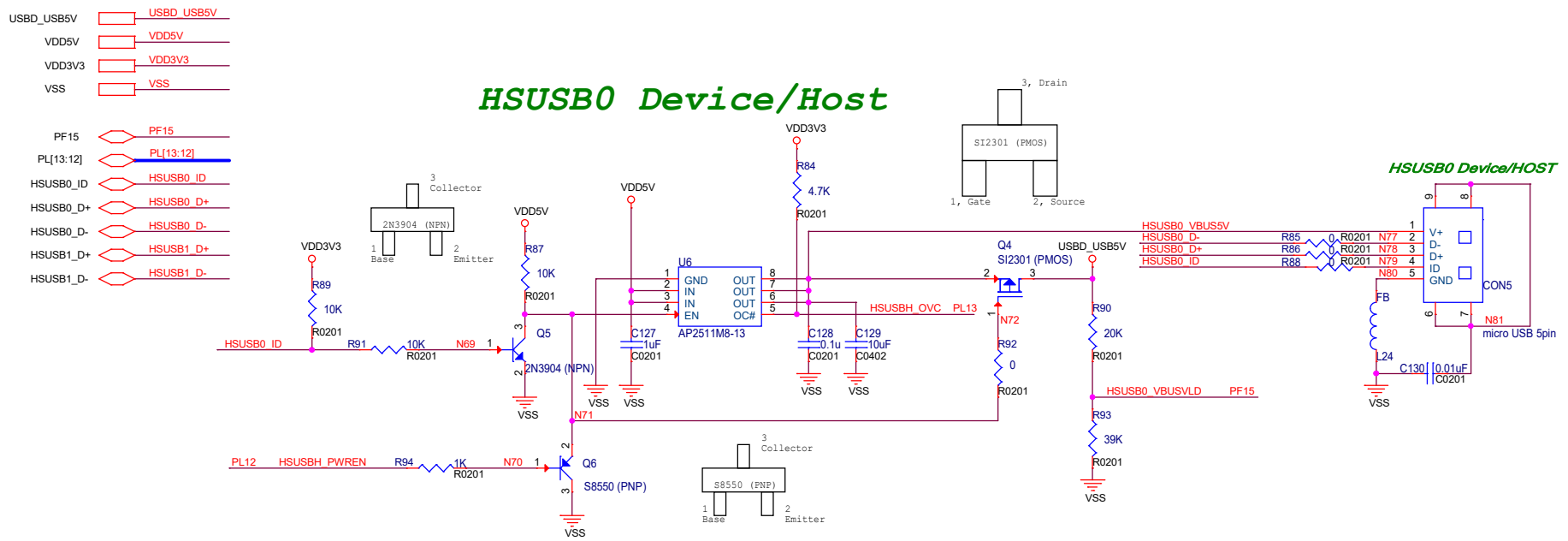

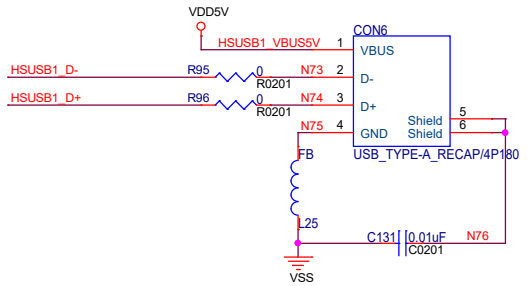

nuvoTon Technology Corp.	
Title	NuMaker-IoT-MA35D05KI1 (LQFP128)
Size B	Document Number 08. High Speed USB
Rev	V1.0
Date: Wednesday, March 04, 2026	Sheet 9 of 9