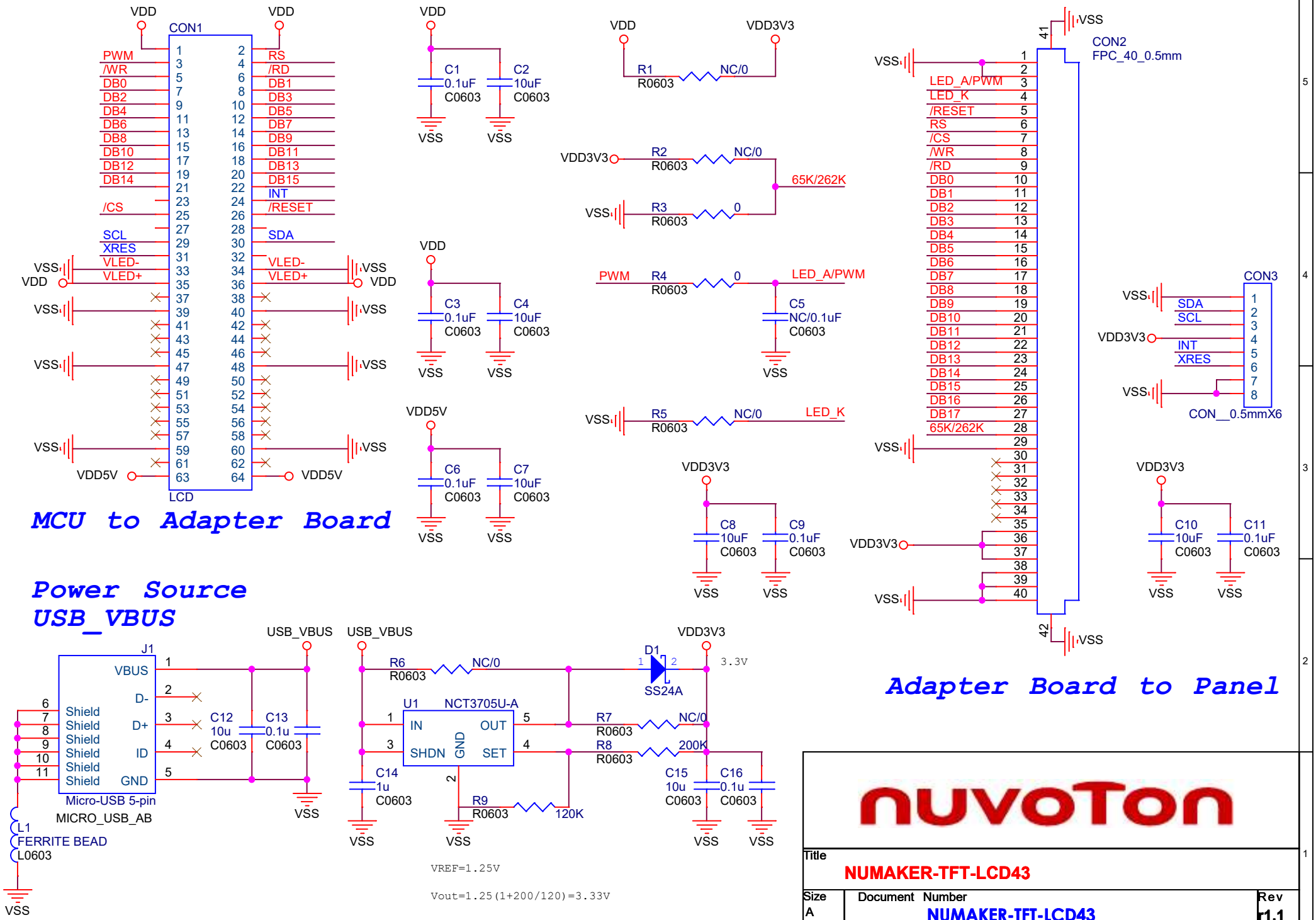
MCU to Adapter Board
CON1
LCD
PWM
/WR
DB0
DB2
DB4
DB6
DB8
DB10
DB12
DB14
/CS
SCL
XRES
VLED-
VLED+
RS
/RD
DB1
DB3
DB5
DB7
DB9
DB11
DB13
DB15
INT
/RESET
SDA
VDD
VDD5V
VSS
C1 0.1uF C0603
C2 10uF C0603
C3 0.1uF C0603
C4 10uF C0603
C6 0.1uF C0603
C7 10uF C0603
R1 R0603 NC/0
R2 R0603 NC/0
R3 R0603 0
65K/262K
R4 R0603 0
LED_A/PWM
C5 NC/0.1uF C0603
R5 R0603 NC/0
LED_K
VDD3V3
C8 10uF C0603
C9 0.1uF C0603
CON2
FPC_40_0.5mm
65K/262K
CON3
CON__0.5mmX6
C10 10uF C0603
C11 0.1uF C0603
Power Source
USB_VBUS
J1
VBUS
D-
D+
ID
GND
Shield
Micro-USB 5-pin
MICRO_USB_AB
C12 10u C0603
C13 0.1u C0603
L1
FERRITE BEAD
L0603
R6 R0603 NC/0
D1
SS24A
3.3V
U1 NCT3705U-A
IN
OUT
SHDN
GND
SET
R7 R0603 NC/0
R8 R0603 200K
R9 R0603 120K
C14 1u C0603
C15 10u C0603
C16 0.1u C0603
VREF=1.25V
Vout=1.25(1+200/120)=3.33V
Adapter Board to Panel
nuvoTon
Title
NUMAKER-TFT-LCD43
Size A
Document Number
NUMAKER-TFT-LCD43
Rev r1.1
Date: Wednesday, March 30, 2022
Sheet 1 of 1