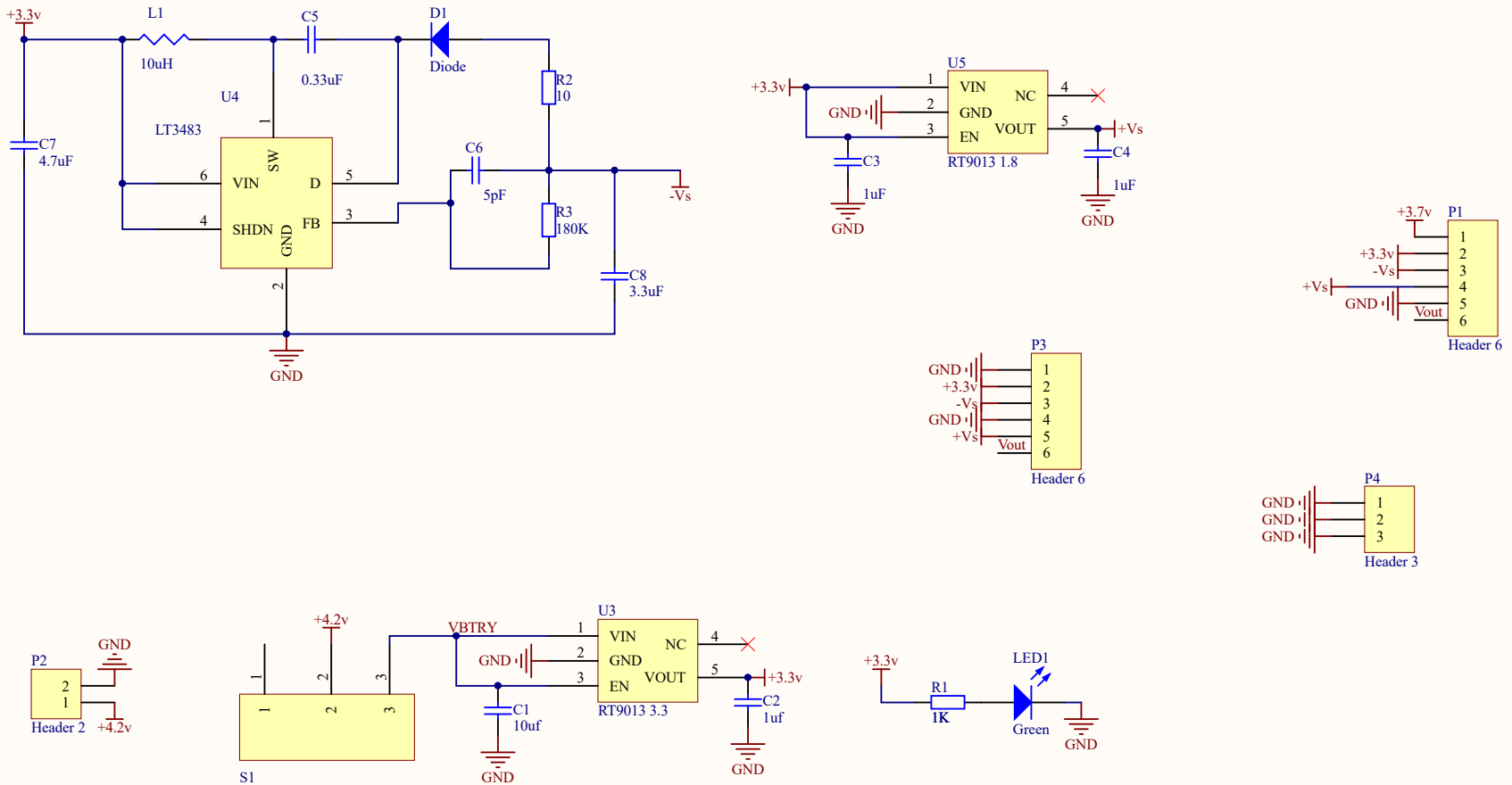

开关+电源芯片

Title		
Size A4	Number	Revision
Date: 2017/3/31		Sheet of
File: C:\Users\..\testing.SchDoc		Drawn By: