11 Technical data

11.1 Connection dimensions

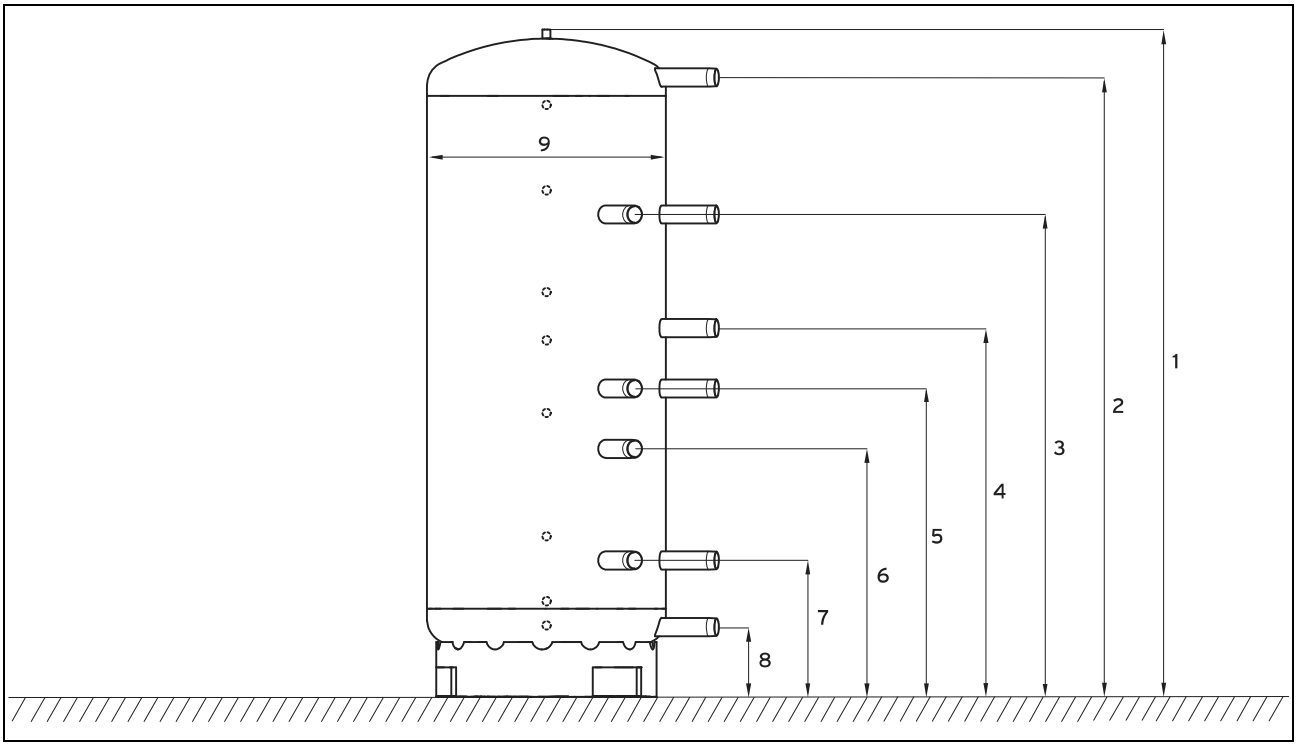

Di-men-sion	Unit	Toler-ance	VPS 300/3	VPS 500/3	VPS 800/3	VPS 1000/3	VPS 1500/3	VPS 2000/3
1	mm	± 10	1720	1700	1832	2212	2190	2313
2	mm	± 10	1617	1570	1670	2051	1973	2080
3	mm	± 10	1210	1230	1330	1598	1573	1656
4	mm	± 10	920	930	1020	1220	1227	1201
5	mm	± 10	744	750	820	1020	1000	1008
6	mm	± 10	574	579	636	822	797	803
7	mm	± 10	365	394	421	451	521	551
8	mm	± 10	130	190	231	231	291	298
9	mm	± 2	Dia. 500	Dia. 650	Dia. 790	Dia. 790	Dia. 1000	Dia. 1100

11.2 Technical data table

Description	Unit	Toler-ance	VPS 300/3	VPS 500/3	VPS 800/3	VPS 1000/3	VPS 1500/3	VPS 2000/3
Cylinder tank capacity	l	± 2	303	491	778	962	1505	1917
Perm. system overpressure (heating side)	MPa (bar)	—	0.3 (3)					
Heating water temperature	°C	—	95					
Cylinder tank outer diameter (without heat insulation)	mm	± 2	500	650	790	790	1000	1100
Cylinder tank outer diameter (with heat insulation)	mm	± 10	780	930	1070	1070	1400	1500
Cylinder tank depth (incl. heat insulation and connections)	mm	± 10	828	978	1118	1118	1448	1548
Cylinder tank height (incl. purging valve and positioning ring)	mm	± 10	1735	1715	1846	2226	2205	2330
Buffer cylinder height (incl. heat insulation)	mm	± 10	1833	1813	1944	2324	2362	2485

Description	Unit	Toler-ance	VPS 300/3	VPS 500/3	VPS 800/3	VPS 1000/3	VPS 1500/3	VPS 2000/3
Cylinder tank weight (empty)	kg	± 10	70	90	130	145	210	240
Cylinder tank weight (full)	kg	± 10	373	581	908	1107	1715	2157
Tilt measurement	mm	± 20	1734	1730	1870	2243	2253	2394
Standby energy consumption	KWh/24 hrs	—	< 1.7	< 2.0	< 2.4	< 2.5	< 2.9	< 3.3

11.3 Connection sizes

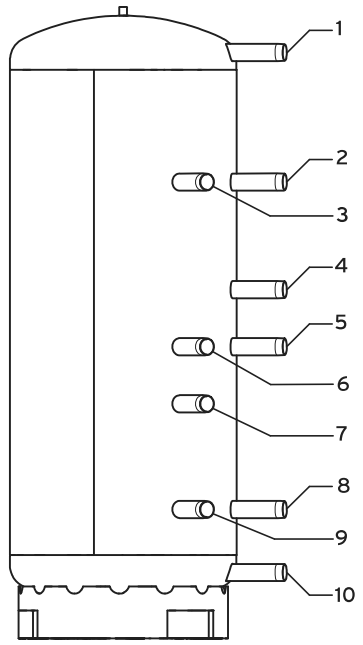

	Rear connections
	Item no. 1, 2, 3, 4, 5, 6, 7, 8, 9, 10
VPS 300/3	R 1 1/2
VPS 500/3	
VPS 800/3	R 2
VPS 1000/3	
VPS 1500/3	R 2 1/2
VPS 2000/3	