SLE SoC

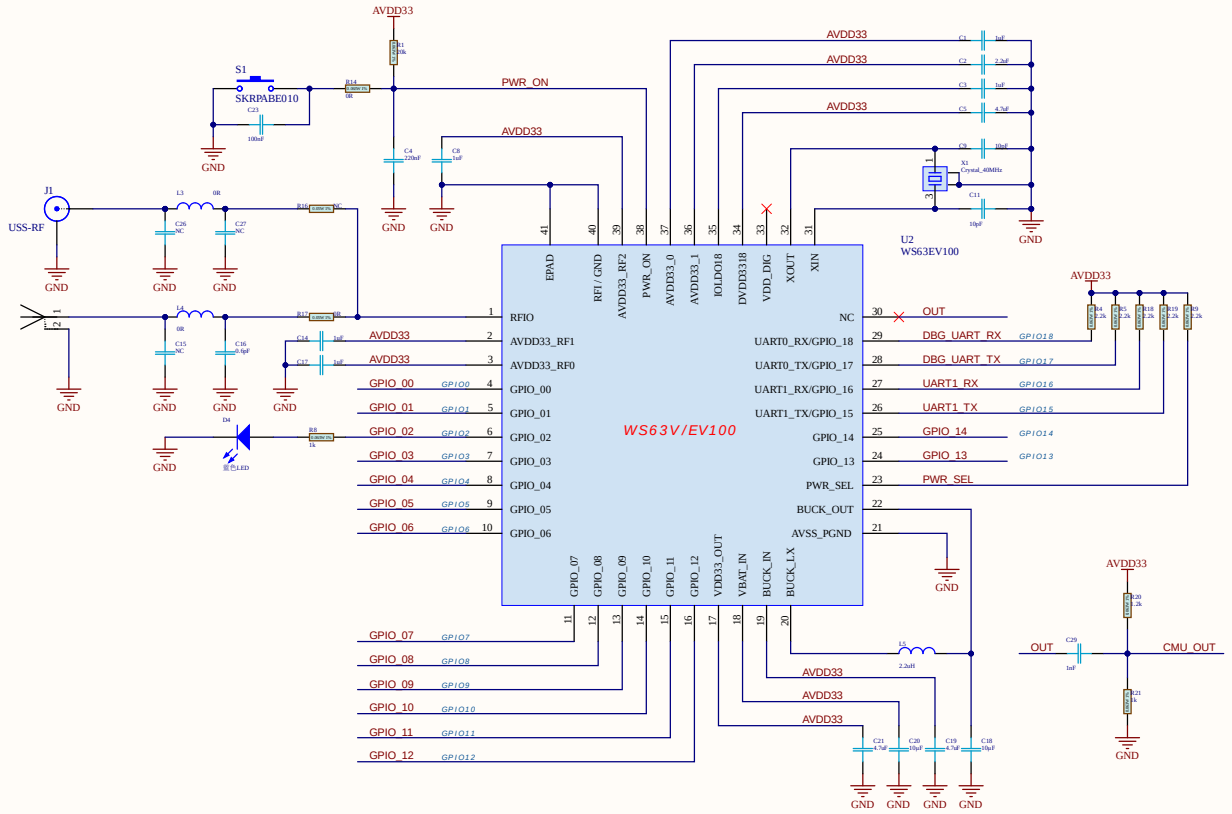

EXT GPIO

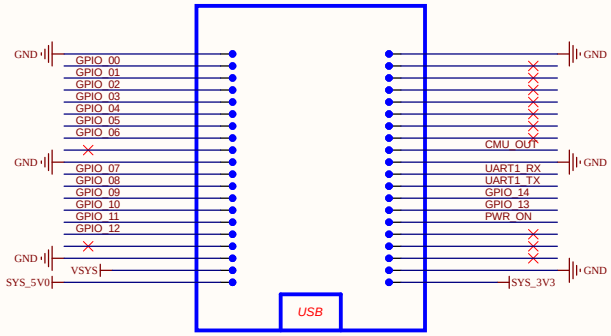
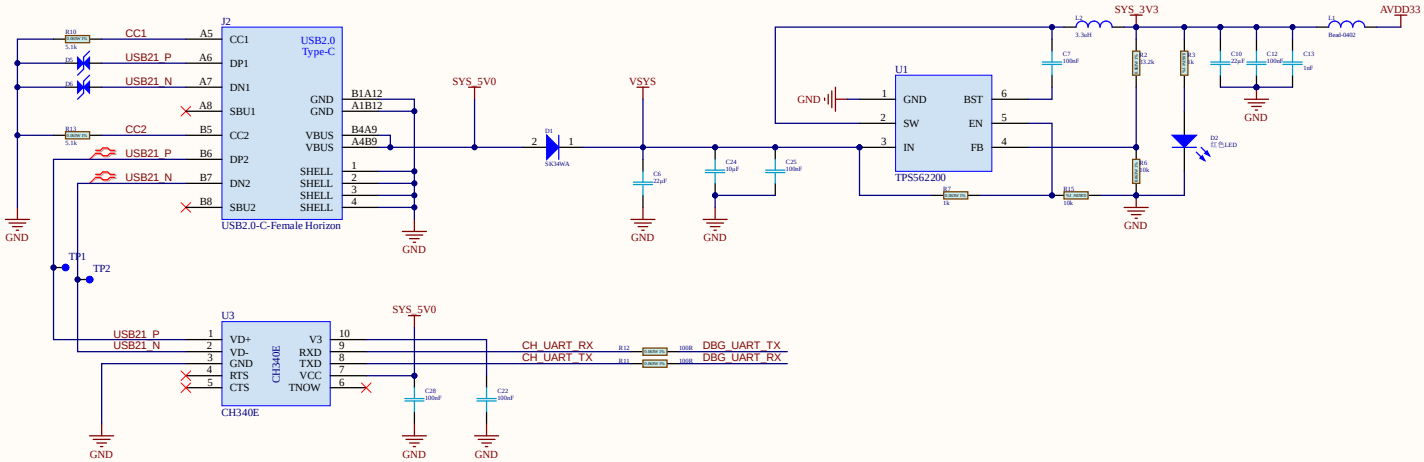
USB 5V &TTL