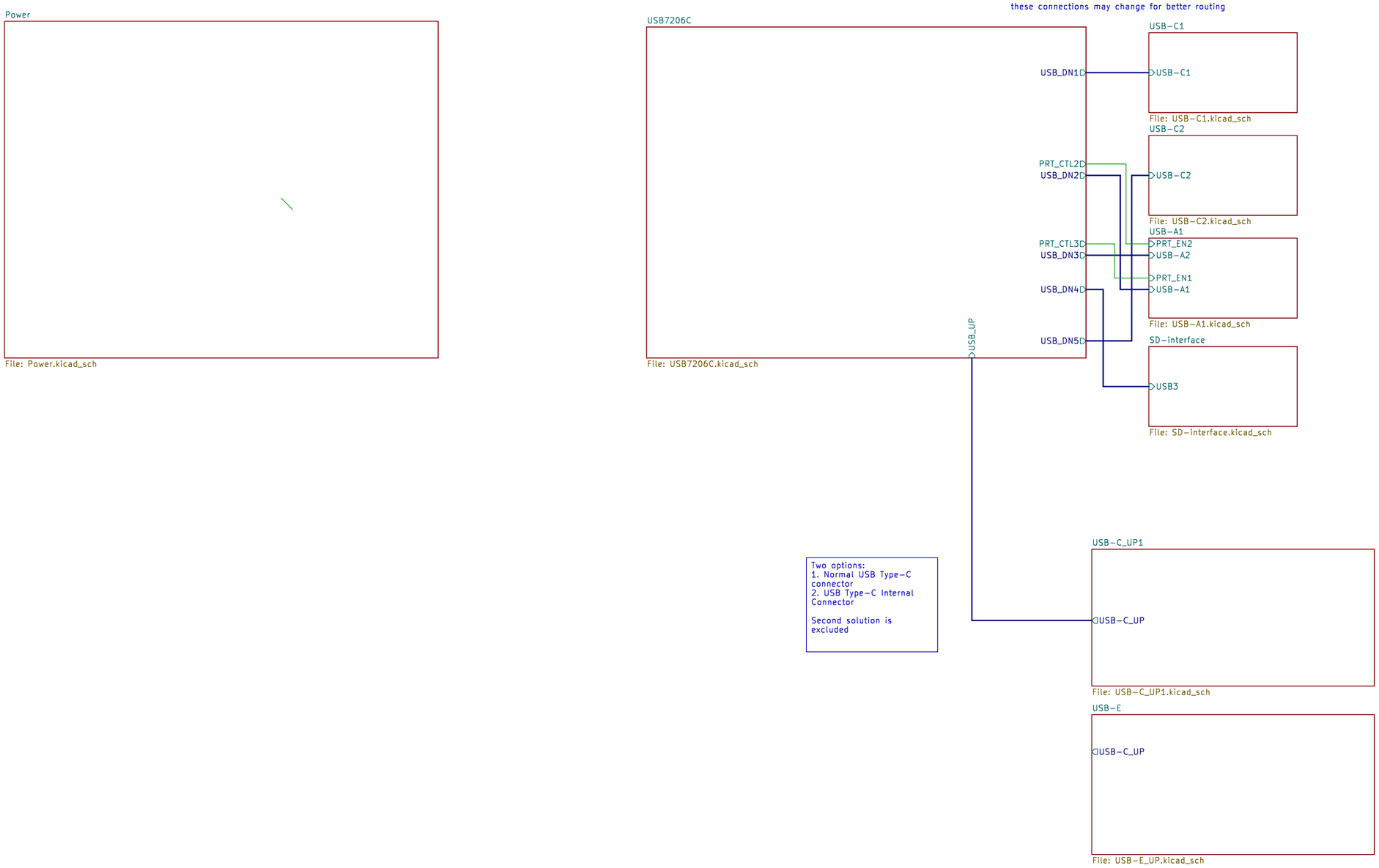

Sheet: /
File: USB_hub.kicad_sch

Title: USB Hub

Size: A3	Date:	Rev:
KiCad E.D.A. 9.0.3		Id: 1/9

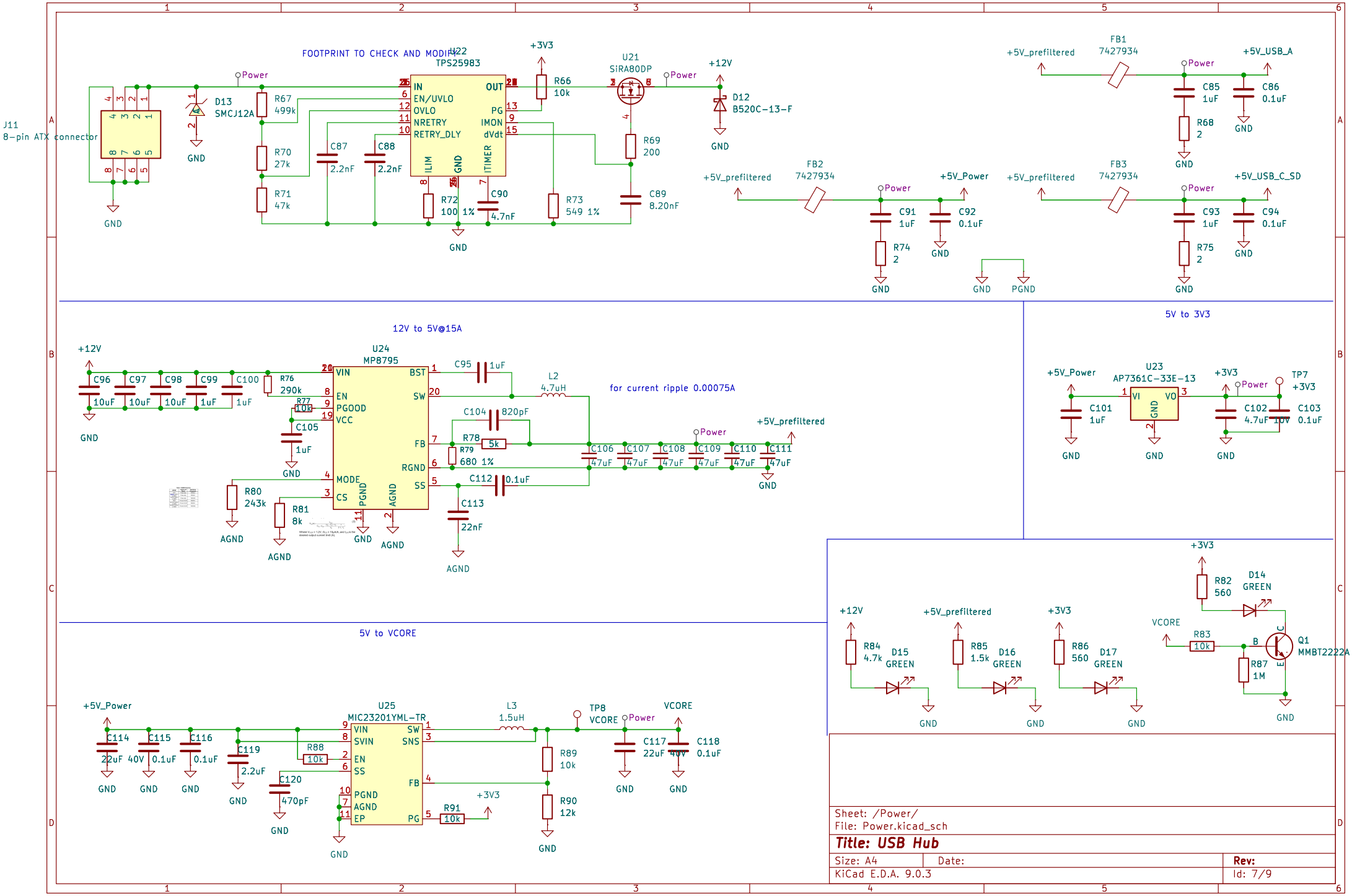
FOOTPRINT TO CHECK AND MODIFY
J11
8-pin ATX connector
D13
SMCJ12A
U22
TPS25983
IN
EN/UVLO
OVLO
NRETRY
RETRY_DLY
OUT
PG
IMON
dVdt
ILIM
GND
ITIMER
R67
499k
R70
27k
R71
47k
C87
2.2nF
C88
2.2nF
R72
100 1%
C90
4.7nF
R73
549 1%
R66
10k
+3V3
U21
SiRA80DP
R69
200
C89
8.20nF
+12V
D12
B520C-13-F
FB1
7427934
+5V_prefiltered
+5V_USB_A
C85
1uF
C86
0.1uF
R68
2
FB2
7427934
+5V_Power
C91
1uF
C92
0.1uF
R74
2
FB3
7427934
+5V_USB_C_SD
C93
1uF
C94
0.1uF
R75
2
PGND
12V to 5V@15A
U24
MP8795
VIN
EN
PGOOD
VCC
BST
SW
FB
RGND
SS
MODE
CS
PGND
AGND
+12V
C96
10uF
C97
10uF
C98
10uF
C99
1uF
C100
1uF
R76
290k
R77
10k
C105
1uF
R80
243k
R81
8k
C95
1uF
L2
4.7uH
for current ripple 0.00075A
C104
820pF
R78
5k
R79
680 1%
C112
0.1uF
C113
22nF
C106
47uF
C107
47uF
C108
47uF
C109
47uF
C110
47uF
C111
47uF
5V to 3V3
+5V_Power
U23
AP7361C-33E-13
VI
VO
GND
C101
1uF
+3V3
C102
4.7uF
C103
0.1uF
TP7
+3V3
5V to VCORE
U25
MIC23201YML-TR
VIN
SVIN
EN
SS
PGND
AGND
EP
SW
SNS
FB
PG
C114
22uF
C115
40V
0.1uF
C116
0.1uF
C119
2.2uF
C120
470pF
R88
10k
R91
10k
L3
1.5uH
TP8
VCORE
R89
10k
R90
12k
C117
22uF
C118
0.1uF
R84
4.7k
D15
GREEN
R85
1.5k
D16
GREEN
R86
560
D17
GREEN
R82
560
D14
GREEN
R83
10k
R87
1M
Q1
MMBT2222A
Sheet: /Power/
File: Power.kicad_sch
Title: USB Hub
Size: A4
Date:
Rev:
KiCad E.D.A. 9.0.3
Id: 7/9

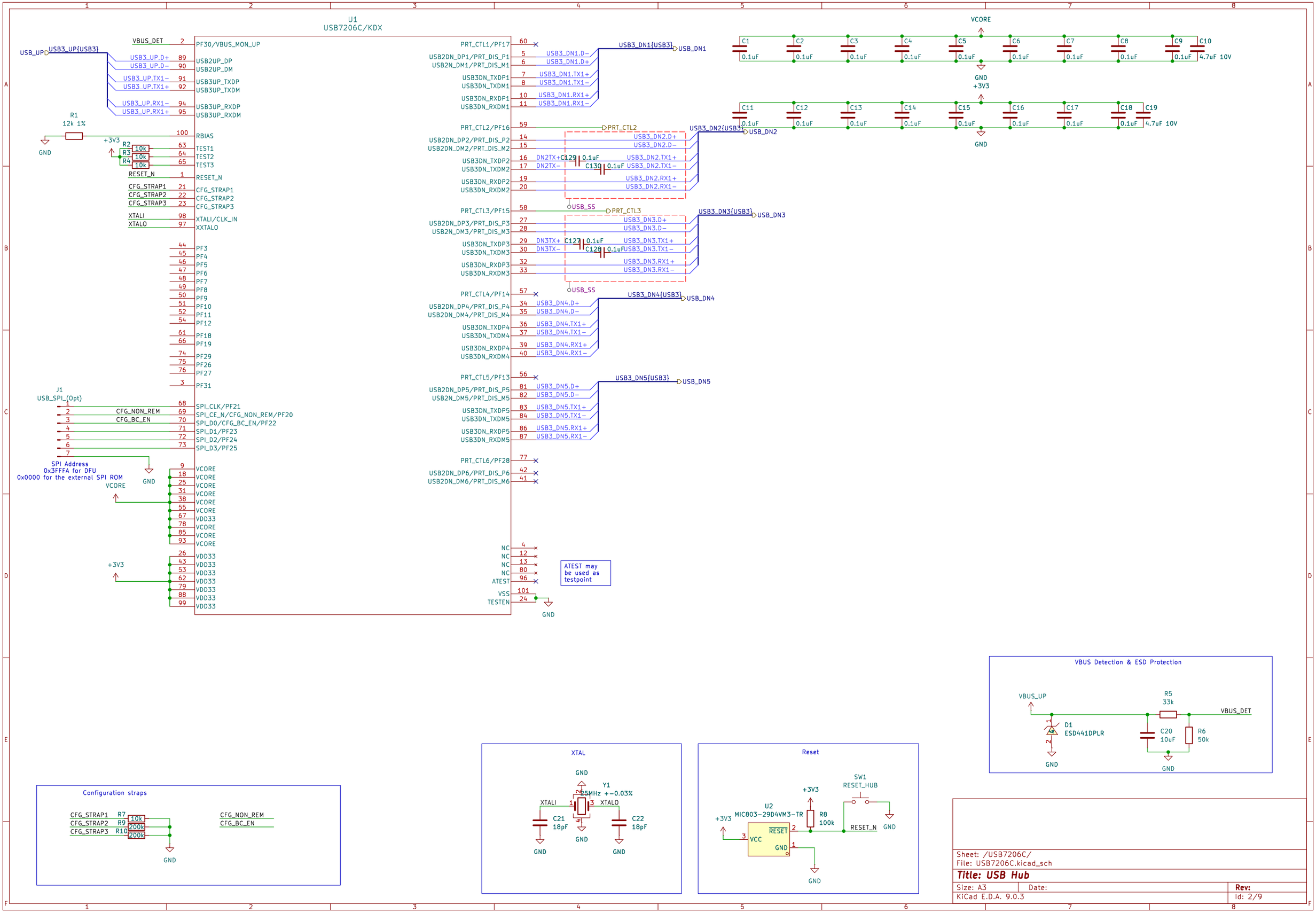
U1
USB7206C/KDX
USB_UP
USB3_UP{USB3}
VBUS_DET
USB3_UP.D+
USB3_UP.D−
USB3_UP.TX1−
USB3_UP.TX1+
USB3_UP.RX1−
USB3_UP.RX1+
R1
12k 1%
GND
+3V3
R2 10k
R3 10k
R4 10k
RESET_N
CFG_STRAP1
CFG_STRAP2
CFG_STRAP3
XTALI
XTALO
PF30/VBUS_MON_UP
USB2UP_DP
USB2UP_DM
USB3UP_TXDP
USB3UP_TXDM
USB3UP_RXDP
USB3UP_RXDM
RBIAS
TEST1
TEST2
TEST3
RESET_N
CFG_STRAP1
CFG_STRAP2
CFG_STRAP3
XTALI/CLK_IN
XXTALO
PF3
PF4
PF5
PF6
PF7
PF8
PF9
PF10
PF11
PF12
PF18
PF19
PF29
PF26
PF27
PF31
J1
USB_SPI_(Opt)
CFG_NON_REM
CFG_BC_EN
SPI_CLK/PF21
SPI_CE_N/CFG_NON_REM/PF20
SPI_D0/CFG_BC_EN/PF22
SPI_D1/PF23
SPI_D2/PF24
SPI_D3/PF25
SPI Address
0x3FFFA for DFU
0x0000 for the external SPI ROM
VCORE
VDD33
PRT_CTL1/PF17
USB2DN_DP1/PRT_DIS_P1
USB2N_DM1/PRT_DIS_M1
USB3DN_TXDP1
USB3DN_TXDM1
USB3DN_RXDP1
USB3DN_RXDM1
USB3_DN1.D−
USB3_DN1.D+
USB3_DN1.TX1+
USB3_DN1.TX1−
USB3_DN1.RX1+
USB3_DN1.RX1−
USB3_DN1{USB3}
USB_DN1
PRT_CTL2/PF16
USB2DN_DP2/PRT_DIS_P2
USB2DN_DM2/PRT_DIS_M2
USB3DN_TXDP2
USB3DN_TXDM2
USB3DN_RXDP2
USB3DN_RXDM2
PRT_CTL2
USB3_DN2.D+
USB3_DN2.D−
DN2TX+
DN2TX−
C129 0.1uF
C130 0.1uF
USB3_DN2.TX1+
USB3_DN2.TX1−
USB3_DN2.RX1+
USB3_DN2.RX1−
USB3_DN2{USB3}
USB_DN2
PRT_CTL3/PF15
USB2DN_DP3/PRT_DIS_P3
USB2N_DM3/PRT_DIS_M3
USB3DN_TXDP3
USB3DN_TXDM3
USB3DN_RXDP3
USB3DN_RXDM3
USB_SS
PRT_CTL3
USB3_DN3.D+
USB3_DN3.D−
DN3TX+
DN3TX−
C127 0.1uF
C128 0.1uF
USB3_DN3.TX1+
USB3_DN3.TX1−
USB3_DN3.RX1+
USB3_DN3.RX1−
USB3_DN3{USB3}
USB_DN3
PRT_CTL4/PF14
USB2DN_DP4/PRT_DIS_P4
USB2DN_DM4/PRT_DIS_M4
USB3DN_TXDP4
USB3DN_TXDM4
USB3DN_RXDP4
USB3DN_RXDM4
USB3_DN4.D+
USB3_DN4.D−
USB3_DN4.TX1+
USB3_DN4.TX1−
USB3_DN4.RX1+
USB3_DN4.RX1−
USB3_DN4{USB3}
USB_DN4
PRT_CTL5/PF13
USB2DN_DP5/PRT_DIS_P5
USB2N_DM5/PRT_DIS_M5
USB3DN_TXDP5
USB3DN_TXDM5
USB3DN_RXDP5
USB3DN_RXDM5
USB3_DN5.D+
USB3_DN5.D−
USB3_DN5.TX1+
USB3_DN5.TX1−
USB3_DN5.RX1+
USB3_DN5.RX1−
USB3_DN5{USB3}
USB_DN5
PRT_CTL6/PF28
USB2DN_DP6/PRT_DIS_P6
USB2DN_DM6/PRT_DIS_M6
NC
ATEST
VSS
TESTEN
ATEST may be used as testpoint
VCORE
C1 C2 C3 C4 C5 C6 C7 C8 C9 C10
0.1uF
4.7uF 10V
GND
+3V3
C11 C12 C13 C14 C15 C16 C17 C18 C19
VBUS Detection & ESD Protection
VBUS_UP
R5
33k
VBUS_DET
D1
ESD441DPLR
C20
10uF
R6
50k
Configuration straps
CFG_STRAP1 R7 10k
CFG_STRAP2 R9 200k
CFG_STRAP3 R10 200k
CFG_NON_REM
CFG_BC_EN
XTAL
Y1
25MHz +−0.03%
XTALI
XTALO
C21
18pF
C22
18pF
Reset
U2
MIC803−29D4VM3−TR
VCC
RESET
GND
R8
100k
SW1
RESET_HUB
RESET_N
Sheet: /USB7206C/
File: USB7206C.kicad_sch
Title: USB Hub
Size: A3
Date:
Rev:
KiCad E.D.A. 9.0.3
Id: 2/9

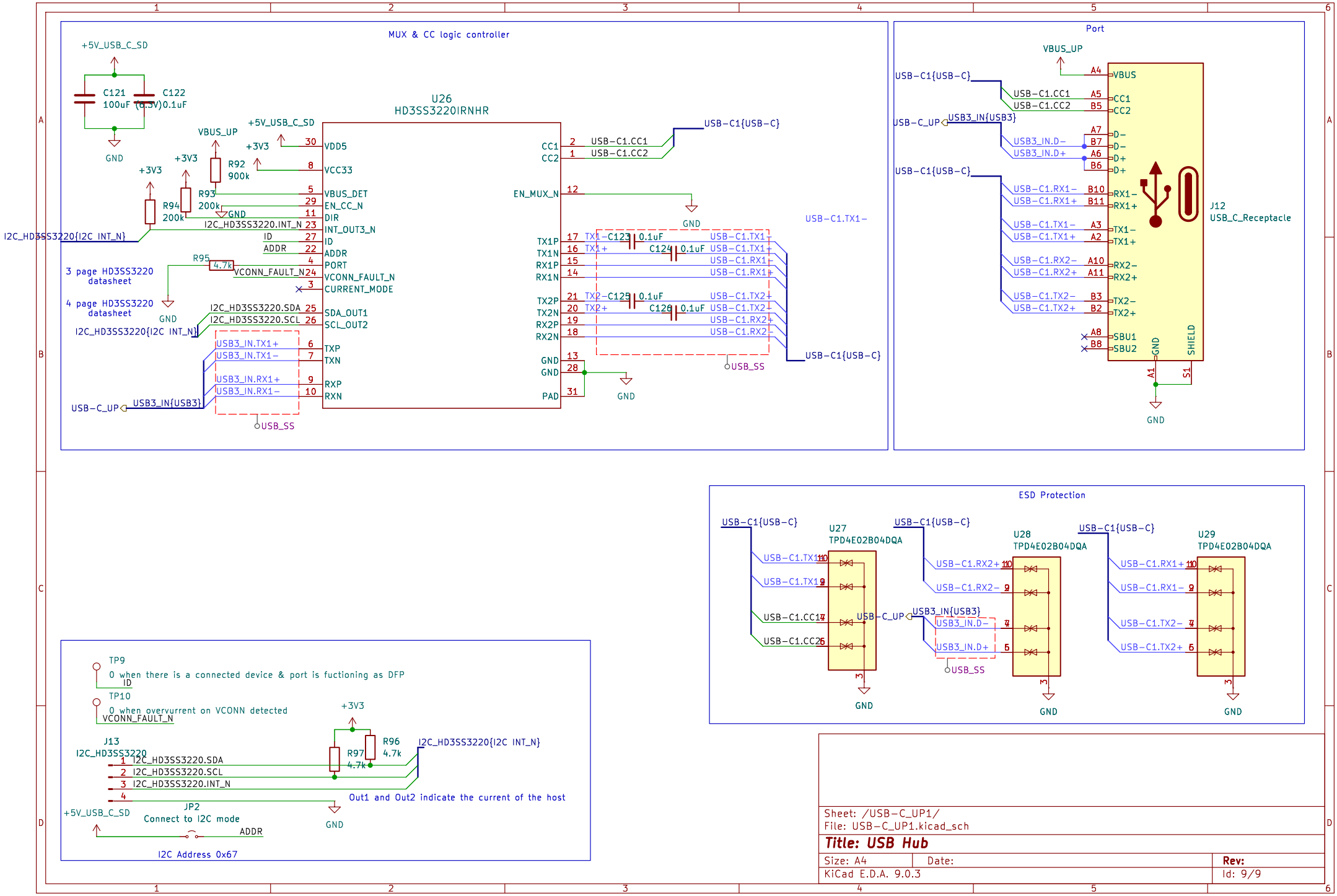
MUX & CC logic controller
+5V_USB_C_SD
C121
100uF (6.3V)
C122
0.1uF
GND
U26
HD3SS3220IRNHR
VBUS_UP
+3V3
R92
900k
R93
200k
R94
200k
R95
4.7k
3 page HD3SS3220 datasheet
4 page HD3SS3220 datasheet
I2C_HD3SS3220{I2C INT_N}
USB-C_UP
USB3_IN{USB3}
USB_SS
VDD5
VCC33
VBUS_DET
EN_CC_N
DIR
INT_OUT3_N
ID
ADDR
PORT
VCONN_FAULT_N
CURRENT_MODE
SDA_OUT1
SCL_OUT2
TXP
TXN
RXP
RXN
I2C_HD3SS3220.INT_N
I2C_HD3SS3220.SDA
I2C_HD3SS3220.SCL
USB3_IN.TX1+
USB3_IN.TX1-
USB3_IN.RX1+
USB3_IN.RX1-
CC1
CC2
USB-C1.CC1
USB-C1.CC2
USB-C1{USB-C}
EN_MUX_N
TX1P
TX1N
RX1P
RX1N
TX2P
TX2N
RX2P
RX2N
GND
PAD
C123
C124
C125
C126
0.1uF
USB-C1.TX1-
USB-C1.TX1+
USB-C1.RX1-
USB-C1.RX1+
USB-C1.TX2-
USB-C1.TX2+
USB-C1.RX2-
USB-C1.RX2+
Port
VBUS_UP
USB-C1{USB-C}
USB-C_UP
USB3_IN{USB3}
USB3_IN.D-
USB3_IN.D+
USB-C1.CC1
USB-C1.CC2
USB-C1.RX1-
USB-C1.RX1+
USB-C1.TX1-
USB-C1.TX1+
USB-C1.RX2-
USB-C1.RX2+
USB-C1.TX2-
USB-C1.TX2+
VBUS
CC1
CC2
D-
D+
RX1-
RX1+
TX1-
TX1+
RX2-
RX2+
TX2-
TX2+
SBU1
SBU2
SHIELD
J12
USB_C_Receptacle
ESD Protection
U27
TPD4E02B04DQA
U28
TPD4E02B04DQA
U29
TPD4E02B04DQA
TP9
0 when there is a connected device & port is fuctioning as DFP
ID
TP10
0 when overvurrent on VCONN detected
VCONN_FAULT_N
J13
I2C_HD3SS3220
R96
4.7k
R97
4.7k
Out1 and Out2 indicate the current of the host
JP2
Connect to I2C mode
ADDR
I2C Address 0x67
Sheet: /USB-C_UP1/
File: USB-C_UP1.kicad_sch
Title: USB Hub
Size: A4
Date:
Rev:
KiCad E.D.A. 9.0.3
Id: 9/9

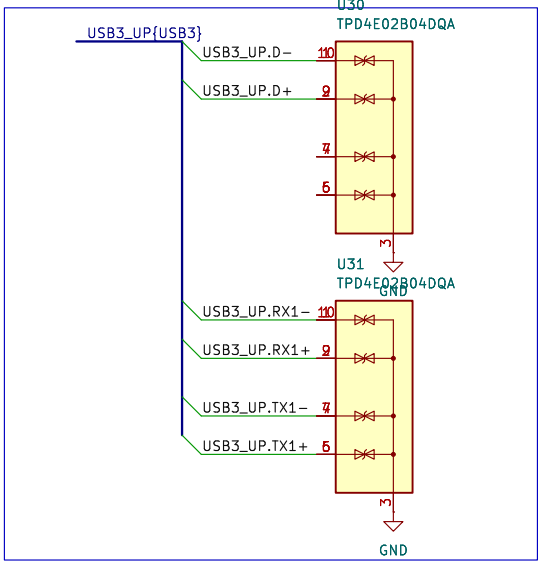

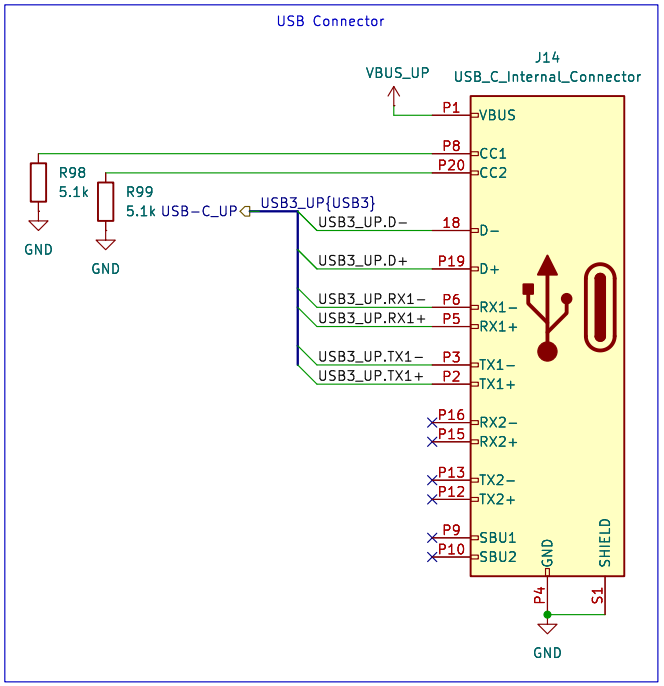

Sheet: /USB−E/
File: USB−E_UP.kicad_sch

Title: USB Hub

Size: A4	Date:	Rev:
KiCad E.D.A. 9.0.3		Id: 10/9

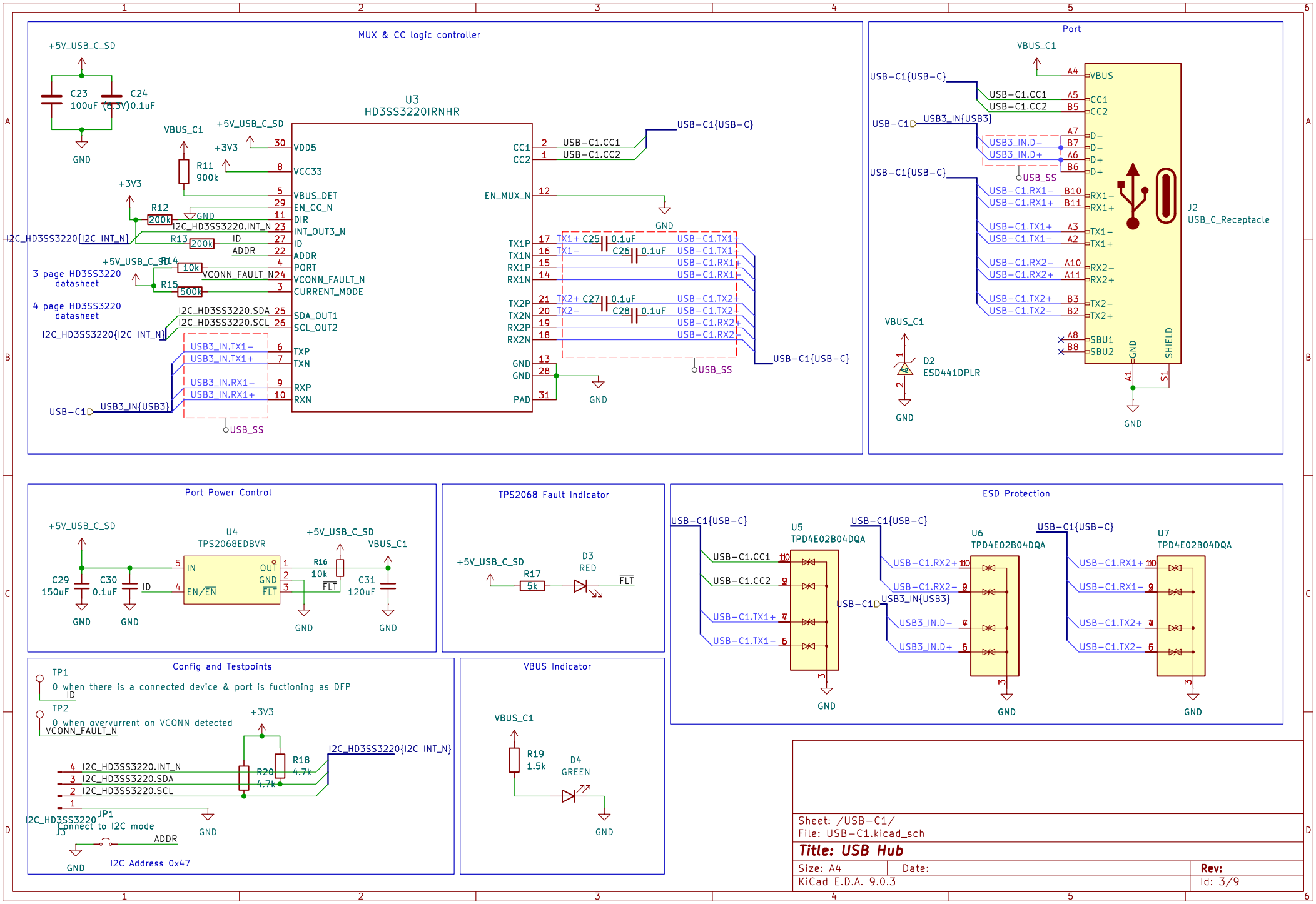
MUX & CC logic controller
U3
HD3SS3220IRNHR
+5V_USB_C_SD
C23 100uF (6.3V)
C24 0.1uF
GND
VBUS_C1
R11 900k
+3V3
R12 200k
R13 200k
R14 10k
R15 500k
I2C_HD3SS3220{I2C INT_N}
3 page HD3SS3220 datasheet
4 page HD3SS3220 datasheet
I2C_HD3SS3220.INT_N
I2C_HD3SS3220.SDA
I2C_HD3SS3220.SCL
VCONN_FAULT_N
USB3_IN.TX1−
USB3_IN.TX1+
USB3_IN.RX1−
USB3_IN.RX1+
USB3_IN{USB3}
USB−C1
USB_SS
VDD5
VCC33
VBUS_DET
EN_CC_N
DIR
INT_OUT3_N
ID
ADDR
PORT
VCONN_FAULT_N
CURRENT_MODE
SDA_OUT1
SCL_OUT2
TXP
TXN
RXP
RXN
CC1
CC2
USB−C1.CC1
USB−C1.CC2
USB−C1{USB−C}
EN_MUX_N
TX1P
TX1N
RX1P
RX1N
TX2P
TX2N
RX2P
RX2N
TX1+ C25 0.1uF
TX1− C26 0.1uF
TX2+ C27 0.1uF
TX2− C28 0.1uF
USB−C1.TX1+
USB−C1.TX1−
USB−C1.RX1+
USB−C1.RX1−
USB−C1.TX2+
USB−C1.TX2−
GND
PAD
Port
VBUS_C1
USB−C1.CC1
USB−C1.CC2
USB3_IN{USB3}
USB3_IN.D−
USB3_IN.D+
USB_SS
USB−C1.RX1−
USB−C1.RX1+
USB−C1.TX1+
USB−C1.TX1−
USB−C1.RX2−
USB−C1.RX2+
USB−C1.TX2+
USB−C1.TX2−
VBUS
CC1
CC2
D−
D+
RX1−
RX1+
TX1−
TX1+
RX2−
RX2+
TX2−
TX2+
SBU1
SBU2
SHIELD
J2
USB_C_Receptacle
D2
ESD441DPLR
Port Power Control
U4
TPS2068EDBVR
IN
OUT
GND
EN/EN
FLT
C29 150uF
C30 0.1uF
ID
R16 10k
C31 120uF
TPS2068 Fault Indicator
D3
RED
R17 5k
ESD Protection
U5
TPD4E02B04DQA
U6
TPD4E02B04DQA
U7
TPD4E02B04DQA
USB−C1.CC1
USB−C1.CC2
USB−C1.TX1+
USB−C1.TX1−
USB−C1.RX2+
USB−C1.RX2−
USB3_IN.D−
USB3_IN.D+
USB−C1.RX1+
USB−C1.RX1−
USB−C1.TX2+
USB−C1.TX2−
Config and Testpoints
TP1
0 when there is a connected device & port is fuctioning as DFP
ID
TP2
0 when overvurrent on VCONN detected
VCONN_FAULT_N
R18 4.7k
R20 4.7k
JP1
Connect to I2C mode
J3
ADDR
I2C Address 0x47
VBUS Indicator
R19 1.5k
D4
GREEN
Sheet: /USB−C1/
File: USB−C1.kicad_sch
Title: USB Hub
Size: A4
Date:
Rev:
KiCad E.D.A. 9.0.3
Id: 3/9

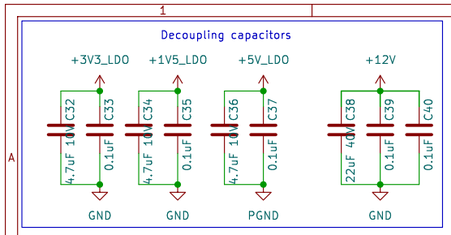

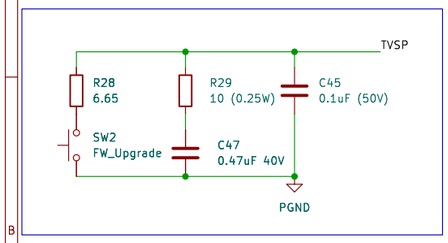

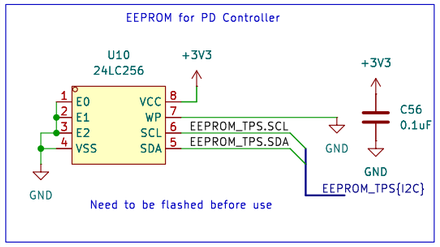

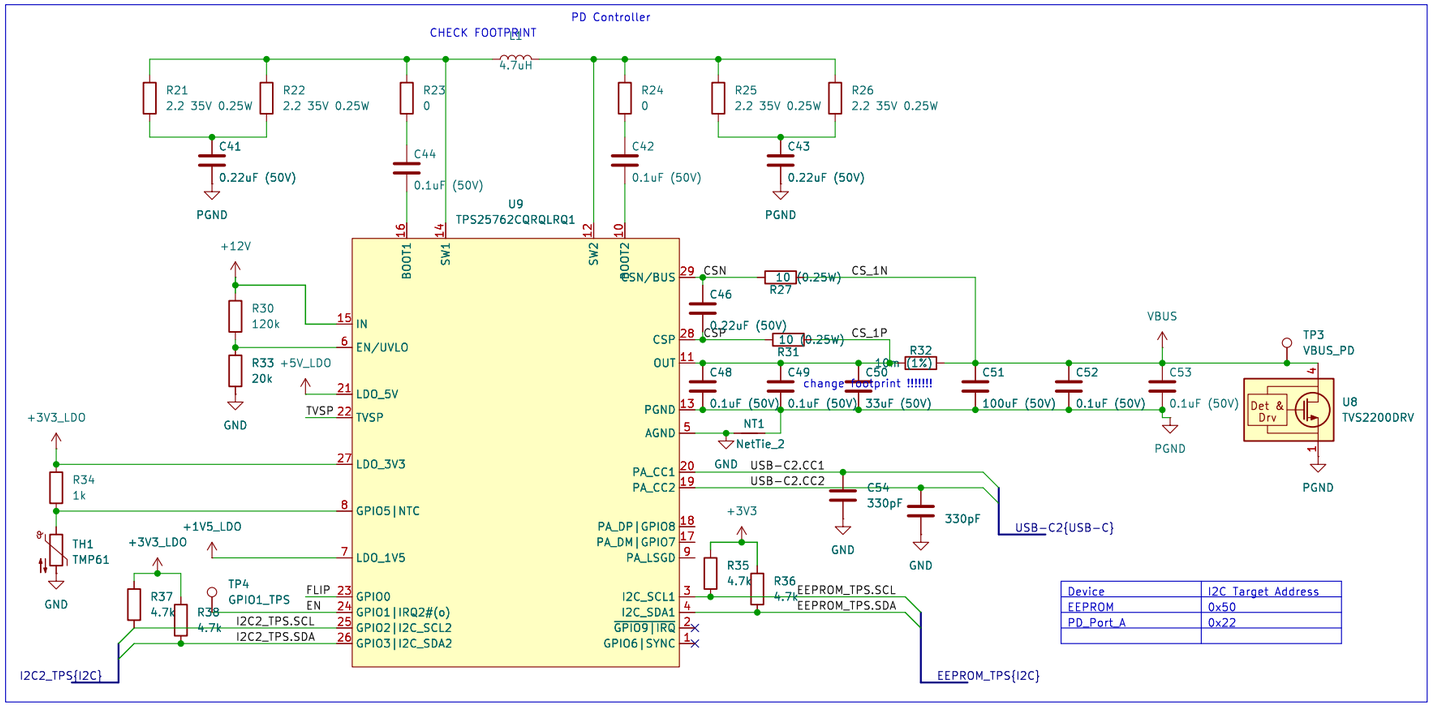

Device	I2C Target Address
EEPROM	0x50
PD_Port_A	0x22

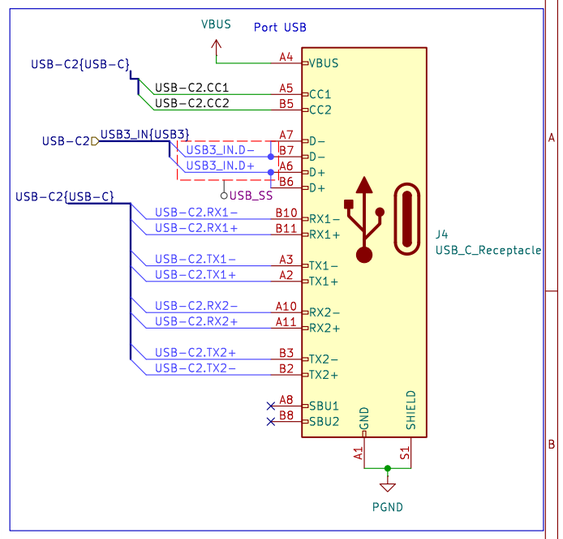

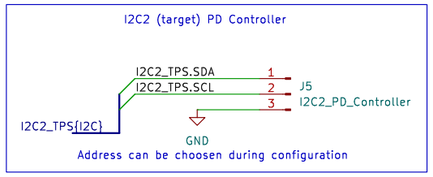

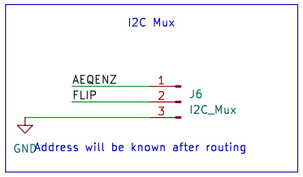

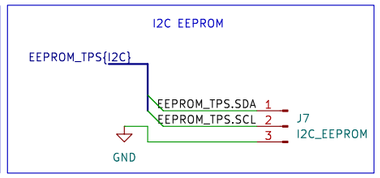

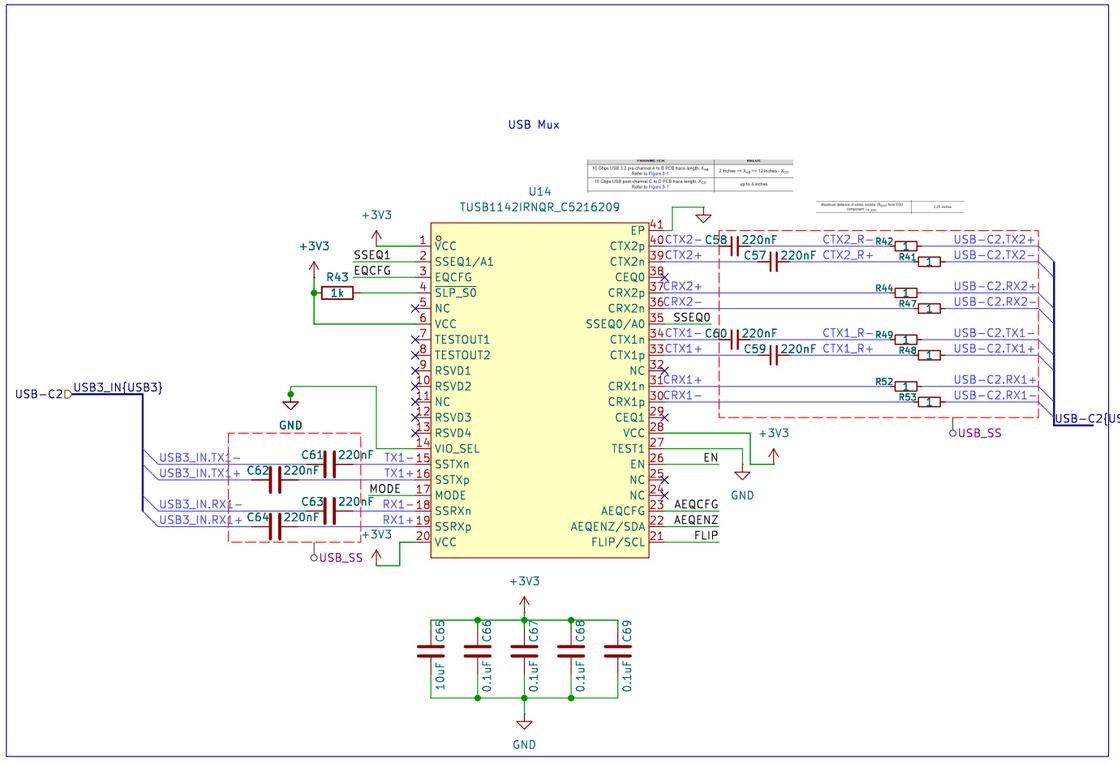

FRAMEWORK	VALUE
10 Gbps USB 3.2 pre-channel A to B PCB trace length, X_{AB} Refer to Figure 6-1.	2 inches <= X_{AB} <= 12 inches - X_{CD}
10 Gbps USB post-channel C to D PCB trace length, X_{CD} Refer to Figure 6-1.	up to 6 inches

Maximum distance of series resistor (R_{SSQ}) from ESD component (I_{O_ESD})	0.25 inches

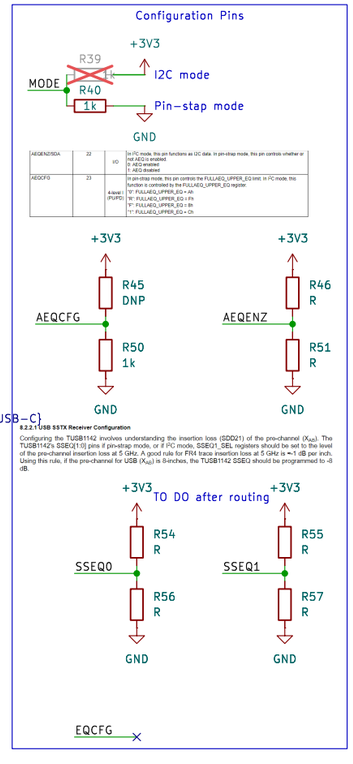

AEQENZ/SDA	22	I/O	In I²C mode, this pin functions as I2C data. In pin-strap mode, this pin controls whether or not AEQ is enabled 0: AEQ disabled 1: AEQ disabled
AEQCFG	23	4-level (PUPD)	In pin-strap mode, this pin controls the FULLAEQ_UPPER_EQ bit. In I²C mode, this function is controlled by the FULLAEQ_UPPER_EQ register. '0': FULLAEQ_UPPER_EQ = 0h 'R': FULLAEQ_UPPER_EQ = Fh 'F': FULLAEQ_UPPER_EQ = Bh '1': FULLAEQ_UPPER_EQ = Ch

8.2.1 USB SSTX Receiver Configuration

Configuring the TUSB1142 involves understanding the insertion loss (SDD21) of the pre-channel (X_{AB}). The TUSB1142's SSEQ[1:0] pins if pin-strap mode, or if I²C mode, SSEQ1_SEL registers should be set to the level of the pre-channel insertion loss at 5 GHz. A good rule for FR4 trace insertion loss at 5 GHz is ~1 dB per inch. Using this rule, if the pre-channel for USB (X_{AB}) is 8-inches, the TUSB1142 SSEQ should be programmed to -8 dB.

7.4.2 Rx EQ Configuration in Pin-Strap Mode

The TUSB1142 configured in pin-strap mode uses the follow pins to control the EQ setting for each of its receivers: EQCFG pin, SSEQ[1:0] pins, CEQ[1:0] pins.

Table 7-6. Pin-strap: SSTX Receiver EQ Configuration

SSTX Receiver	SSEQ[1:0] pin level	Gain at 5 GHz	EQCFG pin level
SSTX	SSEQ0 = '0'	3 dB	'1' or 'R'
	SSEQ0 = 'R'	6 dB	'1' or 'R'
	SSEQ0 = 'F'	9 dB	'1' or 'R'
	SSEQ0 = '1'	12 dB	'1' or 'R'
	16 possible settings based on SSEQ0 and SSEQ1	Refer to Table 7-3	'0' or 'F'

The following table describes receiver equalization controls for the receivers facing the USB connector.

Table 7-7. Pin Strap: CRX1 and CRX2 EQ Configuration with AEQ Disabled

CRX Receiver	CEQ[1:0] pin level	Gain at 5 GHz	EQCFG pin level
CRX1	CEQ0 = '0'	3 dB	'0' or 'R'
	CEQ0 = 'R'	6 dB	'0' or 'R'
	CEQ0 = 'F'	9 dB	'0' or 'R'
	CEQ0 = '1'	12 dB	'0' or 'R'
	16 possible settings based on CEQ0 and CEQ1	Refer to Table 7-2	'F' or '1'
CRX2	CEQ1 = '0'	3 dB	'0' or 'R'
	CEQ1 = 'R'	6 dB	'0' or 'R'
	CEQ1 = 'F'	9 dB	'0' or 'R'
	CEQ1 = '1'	12 dB	'0' or 'R'
	16 possible settings based on CEQ0 and CEQ1	Refer to Table 7-2.	'F' or '1'

Table 7-2. USB Connector Facing Port Receiver (CRX1 and CRX2 pins) Equalization Control

Register(s): CEQ0_SEL or CEQ2_SEL Equalization Setting #	CEQ1 PIN Level	CEQ0 PIN Level	EQ Gain at 5 GHz minus Gain at 100 MHz (dB)
0	0	0	-0.4
1	0	R	1.9
2	0	F	3.5
3	0	1	5.0
4	R	0	6.1
5	R	R	7.2
6	R	F	8.0
7	R	1	8.8
8	F	0	9.6
9	F	R	10.2
10	F	F	10.7
11	F	1	11.2
12	1	0	11.6
13	1	R	12.0
14	1	F	12.4
15	1	1	12.7

Table 7-3. USB Host Facing Port Receiver (SSTX) Equalization Control

Register(s): SSEQ1_SEL Equalization Setting #	SSEQ1 PIN LEVEL	SSEQ0 PIN LEVEL	EQ Gain at 5 GHz minus Gain at 100 MHz (dB)
0	0	0	0.6
1	0	R	2.8
2	0	F	4.5
3	0	1	6.0
4	R	0	7.0
5	R	R	8.0
6	R	F	9.0
7	R	1	10.0
8	F	0	10.6
9	F	R	11.2
10	F	F	11.7
11	F	1	12.2
12	1	0	12.5
13	1	R	13.0
14	1	F	13.3
15	1	1	13.6

Note

Adaptive EQ is only supported on CRX1 and CRX2. Adaptive EQ must only be used when CRX1 and CRX2 is connected to a USB receptacle. If CRX1 and CRX2 is connected directly (not through a USB receptacle) to a USB Host, USB Hub or USB Device, then adaptive EQ must be disabled. AEQ should never be enabled in a active cable application. If daisy chaining multiple TUSB1142, AEQ should only be enabled on the TUSB1142 that is near the USB receptacle.

7.4.2 Rx EQ Configuration in Pin-Strap Mode

The TUSB1142 configured in pin-strap mode uses the follow pins to control the EQ setting for each of its receivers: EQCFG pin, SSEQ[1:0] pins, CEQ[1:0] pins.

Table 7-6. Pin-strap: SSTX Receiver EQ Configuration

SSTX Receiver	SSEQ[1:0] pin level	Gain at 5 GHz	EQCFG pin level
SSTX	SSEQ0 = '0'	3 dB	'1' or 'R'
	SSEQ0 = 'R'	6 dB	'1' or 'R'
	SSEQ0 = 'F'	9 dB	'1' or 'R'
	SSEQ0 = '1'	12 dB	'1' or 'R'
	16 possible settings based on SSEQ0 and SSEQ1	Refer to Table 7-3	'0' or 'F'

The following table describes receiver equalization controls for the receivers facing the USB connector.

Table 7-7. Pin Strap: CRX1 and CRX2 EQ Configuration with AEQ Disabled

CRX Receiver	CEQ[1:0] pin level	Gain at 5 GHz	EQCFG pin level
CRX1	CEQ0 = '0'	3 dB	'0' or 'R'
	CEQ0 = 'R'	6 dB	'0' or 'R'
	CEQ0 = 'F'	9 dB	'0' or 'R'
	CEQ0 = '1'	12 dB	'0' or 'R'
	16 possible settings based on CEQ0 and CEQ1	Refer to Table 7-2	'F' or '1'
CRX2	CEQ1 = '0'	3 dB	'0' or 'R'
	CEQ1 = 'R'	6 dB	'0' or 'R'
	CEQ1 = 'F'	9 dB	'0' or 'R'
	CEQ1 = '1'	12 dB	'0' or 'R'
	16 possible settings based on CEQ0 and CEQ1	Refer to Table 7-2.	'F' or '1'

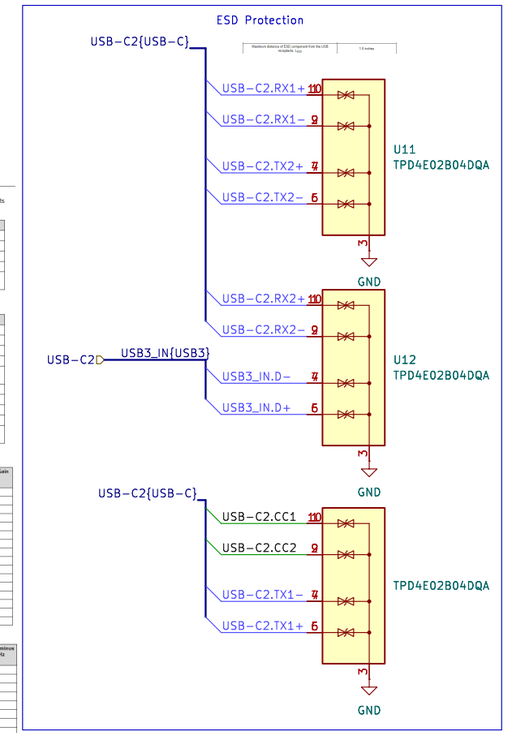

Table 7-1. 4-Level Control Pin Settings

LEVEL	SETTINGS
0	Tie 1-kΩ 5% to GND.
R	Tie 20-kΩ 5% to GND.
F	Float (leave pin open)
1	Tie 1-kΩ 5% to V_{CC}.

Sheet: /USB-C2/
File: USB-C2.kicad_sch

Title: USB Hub

Size: A3	Date:	Rev:
KiCad E.D.A. 9.0.3		Id: 4/9

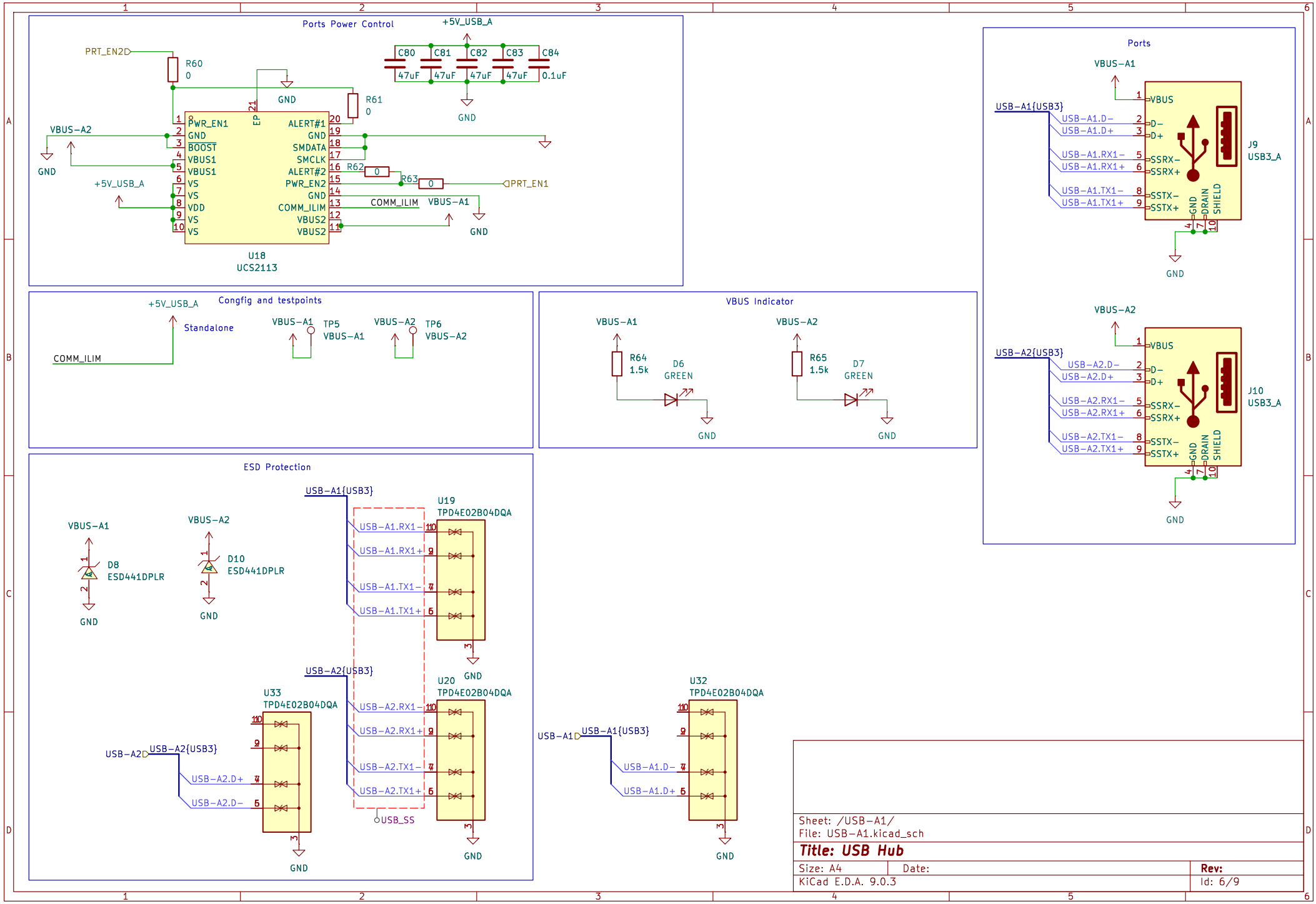
Ports Power Control
+5V_USB_A
PRT_EN2
R60
0
GND
R61
0
C80 C81 C82 C83 C84
47uF 47uF 47uF 47uF 0.1uF
VBUS-A2
PWR_EN1
GND
BOOST
VBUS1
VBUS1
VS
VS
VDD
VS
VS
EP
ALERT#1
GND
SMDATA
SMCLK
ALERT#2
PWR_EN2
GND
COMM_ILIM
VBUS2
VBUS2
R62
R63
PRT_EN1
COMM_ILIM
VBUS-A1
U18
UCS2113
Congfig and testpoints
Standalone
TP5
VBUS-A1
TP6
VBUS-A2
VBUS Indicator
R64
1.5k
D6
GREEN
R65
1.5k
D7
GREEN
Ports
VBUS-A1
USB-A1{USB3}
USB-A1.D-
USB-A1.D+
USB-A1.RX1-
USB-A1.RX1+
USB-A1.TX1-
USB-A1.TX1+
VBUS
D-
D+
SSRX-
SSRX+
SSTX-
SSTX+
GND
DRAIN
SHIELD
J9
USB3_A
VBUS-A2
USB-A2{USB3}
USB-A2.D-
USB-A2.D+
USB-A2.RX1-
USB-A2.RX1+
USB-A2.TX1-
USB-A2.TX1+
J10
USB3_A
ESD Protection
D8
ESD441DPLR
D10
ESD441DPLR
U19
TPD4E02B04DQA
U20
TPD4E02B04DQA
U33
TPD4E02B04DQA
U32
TPD4E02B04DQA
USB_SS
Sheet: /USB-A1/
File: USB-A1.kicad_sch
Title: USB Hub
Size: A4
Date:
Rev:
KiCad E.D.A. 9.0.3
Id: 6/9

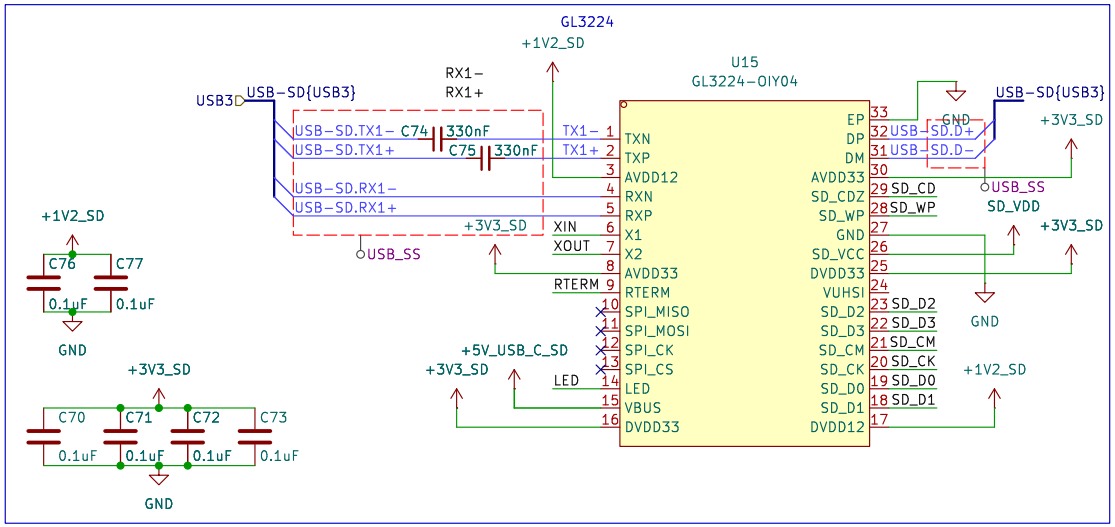

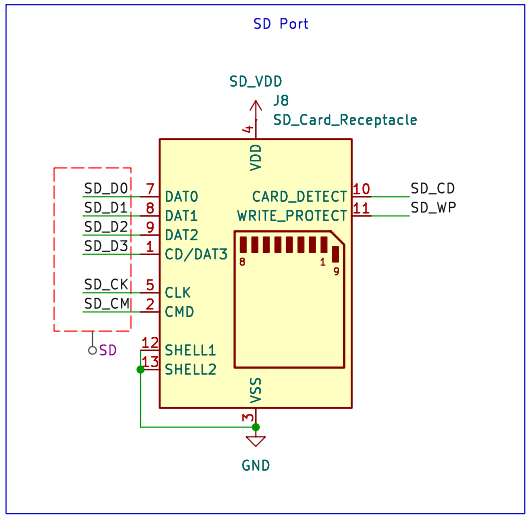

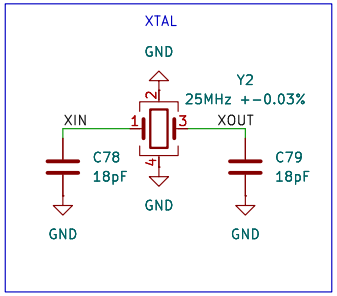

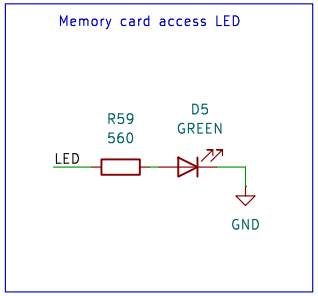

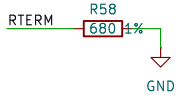

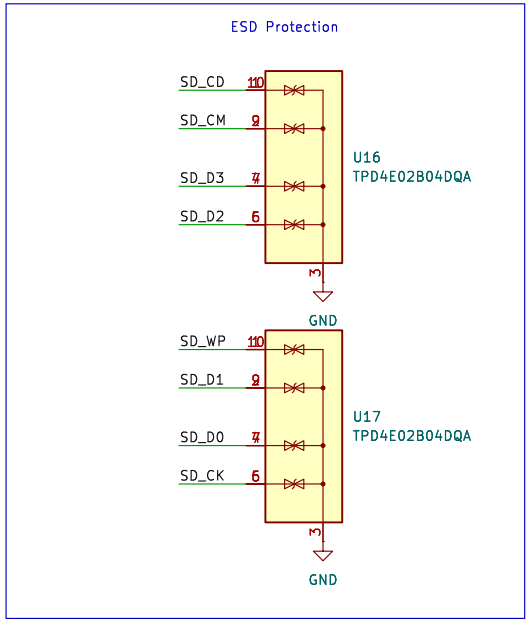

Sheet: /SD-interface/
File: SD-interface.kicad_sch

Title: USB Hub

Size: A4	Date:	Rev:
KiCad E.D.A. 9.0.3		Id: 5/9