С. Г. Лехницкий

ТЕОРИЯ УПРУГОСТИ АНИЗОТРОПНОГО ТЕЛА

Издательство «Наука» Москва

S. G. Lekhnitskii

Theory of Elasticity of an Anisotropic Body

MIR PUBLISHERS • MOSCOW

First published 1981

Translated from the revised 1977 Russian edition

На английском языке

© Издательство «Наука», 1977
© English translation, Mir Publishers, 1981

Contents

Preface to the Second Russian Edition 10

From the Preface to the First Russian Edition 12

Chapter 1

General Equations of the Theory of Elasticity of an Anisotropic Body 15

1. States of Stress and Strain in a Continuous Medium 15
2. Transformation of Stress Components to New Axes 21
3. Generalized Hooke's Law 24
4. Basic Cases of Elastic Symmetry 33
5. Transformation of Elastic Constants to a New Co-ordinate System 39
6. Transformation of Elastic Constants When the Co-ordinate System is Rotated 43
7. Transformation of Complex Parameters When the Co-ordinate System is Rotated 50
8. Surfaces and Curves Representing the Variation of Elastic Constants with Change in Direction 52
9. Some Anisotropic Elastic Materials 58
10. Curvilinear Anisotropy 66
11. General Equations of the Theory of Elasticity and Formulation of Fundamental Problems. Basic Variational Principles 73

Chapter 2

The Simplest Cases of Elastic Equilibrium 79

12. Extension of a Bar under an Axial Force and Its Own Weight 79
13. Shear 83
14. Uniform Compression 85
15. Bending of a Bar by Moments Applied to Its Ends 90
16. Bending of a Rectangular Plate by Moments Distributed Uniformly over Its Sides 93
17. Extension and Bending of a Bar Having Cylindrical Anisotropy 96

Chapter 3

Elastic Equilibrium of a Body Bounded by a Cylindrical Surface in Which the Stresses Do Not Vary along the Generators 99

18. Stress Distribution in a Homogeneous Body with Rectilinear Anisotropy Dependent on Only Two Co-ordinates 99
19. Stress Functions 105
20. General Expressions for Stress Functions in a Homogeneous Rectilinearly Anisotropic Body 112
21. General Formulas for Stress Components and Projections of Displacement. Boundary Conditions 117
22. Stress Distribution in a Continuously Non-homogeneous, Rectilinearly Anisotropic Body Dependent on Two Co-ordinates 121
23. Stress Distribution in a Homogeneous Body Having Cylindrical Anisotropy Dependent on Two Co-ordinates, r, θ 124
24. Stress Distribution in a Continuously Non-homogeneous Body Having Cylindrical Anisotropy Dependent on Two Coordinates 131

Chapter 4

Generalized Plane Strain and Plane Problem for a Body with Rectilinear Anisotropy 134

25. Generalized Plane Strain in a Homogeneous Rectilinearly Anisotropic Body 134
26. Plane Strain and Generalized Plane Stress 139
27. Plane Problem for a Continuously Non-homogeneous, Rectilinearly Orthotropic Body. Extension and Bending by Moments 143
28. Stress Distribution in an Elastic Homogeneous Half-space under Forces Applied to the Boundary Plane 147
29. The Case of a Load Distributed Uniformly along a Straight Line 151
30. Stress Distribution in an Elastic Homogeneous Space with a Cavity in the Form of an Elliptical Cylinder 159
31. Extension of a Homogeneous Orthotropic Plate with an Elliptical Hole 170
32. Some Cases of Stress Distribution in an Orthotropic Plate with a Circular Hole 179
33. Determination of Stresses in a Homogeneous Plate with an Elliptical or a Circular Core 193
34. Extension of an Orthotropic Plate with a Circular Core 198
35. Remarks Concerning the Solution of the Plane Problem and the Problem of Generalized Plane Strain for an Infinite Plane with a Cutout 204
36. Radial Stress Distribution in a Continuously Non-homogeneous Elastic Half-plane 206
37. Extension and Bending by Moments of a Rectangular Plate 210

Chapter 5

Generalized Plane Strain, Plane Problem, and Related Problems for a Homogeneous and a Continuously Non-homogeneous Body Having Cylindrical Anisotropy 215

38. Generalized Plane Strain in a Homogeneous Body Having Cylindrical Anisotropy 215
39. Problem of Plane Strain for a Body with Cylindrical Anisotropy, and Related Problems 220
40. Plane Problem for a Continuously Non-homogeneous Body Having Cylindrical Anisotropy 227
41. Axially Symmetric Distribution of Stress in a Homogeneous Hollow Cylinder Having Cylindrical Anisotropy 230
42. Stress Distribution in a Hollow Homogeneous Cylinder under Internal and External Pressure 234
43. Stress Distribution in a Hollow Homogeneous Cylinder under an Axial Force and a Bending Moment 237
44. Stress Distribution in a Continuously Non-homogeneous Hollow Cylinder under Pressure 242
45. Stress Distribution in a Circular Non-homogeneous Cylinder Having Cylindrical Anisotropy under an Axial Force and a Bending Moment 245
46. Axially Symmetric Distribution of Stress in a Circular Cylinder with Elastic Characteristics Varying Radially and Longitudinally 250
47. Extension by an Axial Force of a Solid Cylinder with a Modulus Varying Only along Its Length 254
48. Bending of a Plane Curved Rod by Moments and a Force Applied at Its Ends 256

Chapter 6

Generalized Torsion and Torsion of Bars 263

49. Generalized Torsion of Homogeneous Bars with Rectilinear Anisotropy 263
50. Combined Action of Twisting and Bending Moments 268
51. Simple or Pure Torsion of a Homogeneous Bar 271
52. Relationship Between Stresses or Displacements and a Function of a Complicated Complex Variable 274
53. Elastic Equilibrium of a Bar of Elliptical Section under Twisting and Bending Moments 276
54. Pure Torsion of a Homogeneous Orthotropic Bar of Elliptical or Circular Section 280
55. Torsion of a Homogeneous Orthotropic Bar of Rectangular Section 283
56. Approximate Methods for Solving Torsion Problems 288
57. Torsion of a Continuously Non-homogeneous Bar with Rectilinear Anisotropy 293
58. Torsion of an Orthotropic Bar of Rectangular Section with Variable Shear Moduli 295

59. Some Other Cases of a Non-homogeneous Orthotropic Bar of Rectangular Section 300
60. Torsion of a Cylindrical or Prismatic Bar Having Cylindrical Anisotropy 304
61. Torsion of a Non-homogeneous Hollow Circular Cylinder Having Cylindrical Anisotropy 308

Chapter 7

Equilibrium of an Anisotropic Cantilever under a Bending Load of the Simplest Type 314

62. Generalized Bending of a Homogeneous Cantilever under a Transverse Force 314
63. General Expressions for Stress Functions, Stress Components, and Projections of Displacement. Boundary Conditions 321
64. Bending of a Homogeneous Rectilinearly Anisotropic Cantilever by a Transverse Force 323
65. Stress Distribution in a Homogeneous Cantilever of Elliptical or Circular Section 328
66. Bending of a Homogeneous Orthotropic Cantilever of Rectangular Section 331
67. Approximate Methods for Solving the Problem of the Bending of a Cantilever by a Transverse Force 335
68. Bending of a Non-homogeneous Orthotropic Cantilever 337
69. Bending of a Non-homogeneous Orthotropic Cantilever of Rectangular Section 341
70. Equilibrium of a Cantilever Having Cylindrical Anisotropy under a Transverse Force 344
71. Stress Distribution in a Cantilever in the Form of a Hollow or Solid Cylinder 349

Chapter 8

Torsion of Bodies of Revolution 352

72. General Equations of the Theory of Torsion for Continuously Non-homogeneous Bodies of Revolution Having Cylindrical Anisotropy 352
73. Torsion of a Homogeneous Body of Revolution 357
74. Torsion of a Curvilinearly Anisotropic Cone 359
75. Effect of a Spherical and a Spheroidal Inclusion or Cavity on the Stress Distribution in a Twisted Bar 363
76. Exact Solution of the Torsion Problem for a Circular Cylinder 369
77. Torsion of a Cylinder in Which the Shear Moduli Vary Directly As a Power of the Distance r (Exact Solution) 372

Chapter 9

Axially Symmetric Deformation of a Transversely Isotropic Body of Revolution 376

78. General Equations for Axially Symmetric Deformation. Stress Function 376
79. General Expressions for Stresses and Displacements in Terms of Two Functions. The General Case of the Deformation of a Transversely Isotropic Body 382
80. Stress Distribution in a Cylinder under an Arbitrary Axially Symmetric Load 387
81. Stress Distribution in a Heavy Block with a Vertical Cavity 390
82. Stress Distribution in an Elastic Half-space under an Axially Symmetric Normal Load 393
83. Stress Distribution in a Half-space under a Concentrated Force and an Arbitrary Normal Load 397
84. Extension of an Elastic Cone 401
85. Stress Distribution around an Ellipsoidal and a Spherical Inclusion or Cavity under Uniaxial and Uniform Tension 404
86. Stress Distribution in the Wall of a Spherical Vessel under Internal and External Pressure 411

References 416

Name Index 425

Subject Index 427

Preface to the Second Russian Edition

The first edition of *Theory of Elasticity of an Anisotropic Body* was published in 1950. Since 1950 the theory of elasticity for anisotropic bodies has been continually developed and enriched with new investigations of both serious problems of a general nature and individual aspects of these problems. Thus, the general theory has been placed on a rigorous scientific basis and a number of laws have been established, with the result that this theory, first worked out by B. de Saint-Venant and P.V. Bekhterev, has been revived. A wide range of individual topics from the field of generalized plane strain, torsion, and bending have been worked on, and a very large number of special problems relating to these topics have been solved. New problems have been considered and solved, namely those of the torsion and bending of bodies of revolution, of stress concentration in three-dimensional systems (in rigorous terms). Of great importance is the development and construction of many entirely new anisotropic materials which possess a number of advantages over those previously known (for example, glass-fibre reinforced plastics). Thus, over a quarter of a century this branch of science has made great progress, both in a theoretical and a purely practical way, i.e., in constructing new anisotropic materials. Nevertheless, what was achieved in the theory of elasticity for anisotropic bodies prior to 1950 has not lost its significance in our time (the seventies of the twentieth century), and, it seems to us, deserves repeating, partly in new terms, in the second edition of the book.

Of course, it is not possible in a small book to describe every new development in this field over a quarter of a century. We therefore wish to make it clear from the outset

that the material presented here is not exhaustive. Moreover, some topics and problems are not considered at all; we give solutions to those that seem to us to be the most important and interesting in terms of practical application (including some new ones). As in the first edition, we deal with anisotropic bodies undergoing only small elastic strains and following the generalized Hooke's law. As before, inelastic strains in an anisotropic body are not considered at all, and among the specific topics and problems we exclude from consideration stability problems for plates (thin slabs) and shells, dynamics problems, and general problems in three dimensions.* Of the new problems we mention some involving the bending, torsion, and other types of deformation of non-homogeneous bodies, and also indicate several problems solvable in rigorous terms.

On the whole, the second, revised edition is somewhat larger than the first edition, although we have found it possible to exclude some sections that were in the first edition.

The second edition of the book includes nine chapters covering six topics: (1) general concepts and equations; (2) the simplest problems; (3) the elastic equilibrium of a body bounded by a cylindrical surface in which the stresses do not vary along the generators (generalized plane strain, generalized torsion, plane problem, pure torsion—Chaps. 3 to 6); (4) the equilibrium of an anisotropic cantilever; (5) the torsion of bodies of revolution, and (6) the axially symmetric deformation of bodies of revolution.

At the end of the book we have appended a list of references containing the titles of works used directly in the text, and also of other works on the theory of elasticity for anisotropic bodies (monographs and papers) which appear to be important and interesting. Also included here are some basic courses in elasticity and several handbooks used in the derivation of a number of formulas. When a reference is given in the text, we indicate the number of the work in the list in square brackets. The list of references makes no claim to be complete. An attempt to reflect all the known

* Incidentally, only a few solutions of such problems are so far known.

literature on the questions discussed in the book and related questions would result in a very large list. We have decided against this, in the belief that more complete lists of the literature will be given in the relevant review papers and bibliographical indices. At present such indices are available for non-homogeneous bodies (isotropic and anisotropic), compiled by G.B. Kolchin and E.A. Faverman [18] and covering works appearing between 1923 and 1973 inclusive (more than 2600 items).

S. G. Lekhnitskii

From the Preface to the First Russian Edition

In modern structures the members are made not only of materials that are usually considered as homogeneous and isotropic in design, but also of anisotropic materials, which show a sharp difference in elastic properties for different directions.

An example of such materials is provided by natural wood; it is well known that the elastic modulus of wood in tension parallel to the grain is considerably greater than the corresponding modulus in tension perpendicular to the grain, and that its elastic constants depend on the direction in relation to the wood fibres. Synthetic materials used in aircraft construction, such as delta wood, aircraft plywood, fabric laminate, are anisotropic (and, moreover, non-homogeneous) materials. Crystals and some rocks exhibit anisotropy of elastic properties. Anisotropy of concrete has been noted and investigated by various authors.

Besides members made of materials having anisotropy dependent on the internal structure ("natural" anisotropy), in modern structures elements with so-called structural or artificial anisotropy are also used. They include plates and shells of isotropic material that are corrugated or reinforced with closely spaced stiffeners.

To design anisotropic members undergoing elastic strains, it is necessary to know how to determine the stresses and

strains in anisotropic bodies theoretically, i.e., to solve problems of the theory of elasticity for anisotropic bodies. As is known, the number of independent elastic constants in an isotropic body is two (Young's modulus and Poisson's ratio). In the case of an anisotropic homogeneous body the number of independent elastic constants may be considerably larger, viz. 21 in the general case of anisotropy. To solve problems of the distribution of stress and strain in an anisotropic body, it is necessary to proceed from the equations of the theory of elasticity that take account of the difference in elastic properties for different directions and accordingly contain more than two elastic constants. Such problems may be encountered by a designer, and also by a specialist in mining engineering and a physicist working with crystals.

At present the theory of elasticity for isotropic bodies is comprehensively and thoroughly developed (owing above all to the works of the Soviet scientists G.V. Kolosov, N.I. Muskhelishvili, B.G. Galerkin, P.F. Papkovich, and many others). The theory of elasticity for anisotropic bodies is not so well developed, but in this field, too, a great body of material has been accumulated in the form of papers published in various periodicals, collections of papers, and several monographs. The problems most completely studied are those of the state of stress and the stability of anisotropic plates (an account of these problems is given, for example, in the author's book *Anisotropic Plates*), while other problems have not yet received a sufficiently full systematic treatment.

We believe that at present there is an urgent need to collect together the accumulated, but not yet systematized material, to put it in order, and to publish it as a separate monograph. It would help designers and other specialists who deal with problems of the elasticity of anisotropic bodies in gaining some insight into these problems and in using the results of investigations to work out their particular problems. The present book is such a monograph, containing both the author's investigations (taking up a major part of the book) and the results obtained by other scientists.

The book covers the following topics: the general equations of the theory of elasticity for anisotropic bodies (Chap. 1); the simplest cases of elastic equilibrium (Chap. 2); the state

of stress in an anisotropic body bounded by a cylindrical surface in which the stresses do not vary along the generators (Chaps. 3 and 4); the state of stress in an anisotropic cantilever of uniform section deformed by a transverse force (Chap. 5); the symmetrical deformation and torsion of bodies of revolution (Chap. 6).

It is seen from this that the book makes no claim to cover all problems of the theory of elasticity for anisotropic bodies, but presents only some of the most studied but as yet unsystematized problems. It contains no investigations of the bending and stability of anisotropic plates since these problems are fairly completely worked out in the author's book *Anisotropic Plates*. The problem of plane strain and generalized plane stress is outlined briefly (in connection with the more general problem), among the special cases only the most important being discussed. The book does not touch upon the problems of the equilibrium and stability of anisotropic shells or the dynamics of an elastic body (except for the general equations of motion). In all cases it is assumed that the strains are elastic and small, and that the material follows the generalized Hooke's law. At the end of the book there is a list of references, which includes some basic courses in elasticity as well as works treating special problems.

S.G. Lekhnitskii

GENERAL EQUATIONS OF THE THEORY OF ELASTICITY OF AN ANISOTROPIC BODY

Chapter 1

The present chapter is introductory. Here we recapitulate the fundamental principles of the theory of elasticity and the general equations, which will be used in what follows for the construction of solutions to specific problems of the theory of elasticity for anisotropic bodies.

1. States of Stress and Strain in a Continuous Medium

In studying the states of stress and strain in anisotropic bodies produced by an external load, we make a number of assumptions imposing certain restrictions. The most important of these reduce to the following.

(1) A body is solid (a continuous medium), the stresses on any plane within the body and on its surface are forces per unit area. In other words, the couple stresses, which are introduced in some present works, are neglected, as is done in the classical theory of elasticity.

(2) The relation between the components of strain and the projections of displacement and their first derivatives with respect to the co-ordinates is linear, i.e., we consider only small strains.

(3) The stress-strain relations are linear, i.e., the material follows the generalized Hooke's law; the coefficients in these linear relations may be either constant (homogeneous body) or variable, i.e., functions of position, continuous or discontinuous (in the case of a non-homogeneous body).

(4) The initial stresses, i.e., those existing without any external load, including the thermal stresses, are disregarded; specific problems of dynamics are not considered.

Thus, we approach the theory of anisotropic elastic bodies from the standpoint of the classical linear theory of homogeneous or non-homogeneous elastic bodies. Of course, dynamic problems, stability and vibration problems, problems involving large strains and some others, as well as problems for an inelastic anisotropic body fall out of our view.

In considering specific problems, we shall mostly use Cartesian or cylindrical orthogonal co-ordinates, and only in certain cases spherical co-ordinates.

We first indicate the major notation used.*

The co-ordinates of points in three-dimensional space are denoted for different co-ordinate systems as follows: x, y, z = Cartesian, r, θ, z = cylindrical, ρ, θ, φ = spherical.

The same letters are used to designate the co-ordinate directions.

The stresses acting on planes normal to the co-ordinate directions are each resolved into three components: one normal (normal stress) and two tangential (shearing stresses). The normal stresses are denoted by the letter σ with one subscript indicating the direction of the normal to a plane (and of the stress). The shearing stresses are denoted by the letter τ with two subscripts (the direction of the normal to a plane and the direction of the stress). On planes normal to the axes of a Cartesian co-ordinate system we have the stress components

$$\sigma_x,\ \tau_{xy},\ \tau_{xz};\quad \tau_{yx},\ \sigma_y,\ \tau_{yz};\quad \tau_{zx},\ \tau_{zy},\ \sigma_z.$$

The stress components constitute a stress tensor; it is often written as a matrix, which, for reasons of the equilibrium of an infinitesimal element of the body, is symmetrical (and hence the tensor is symmetrical):

$$\begin{Vmatrix} \sigma_x & \tau_{xy} & \tau_{xz} \\ \tau_{xy} & \sigma_y & \tau_{yz} \\ \tau_{xz} & \tau_{yz} & \sigma_z \end{Vmatrix}.$$

* The basic formulas and equations of continuum mechanic underlying the theory of elasticity are not derived here since they may be found in courses in elasticity (see, for example, the course by A.E.H. Love [29], V.V. Novozhilov [34], L. S. Leibenzon [24])

The tensor is of rank two.

The expressions for the stress tensors in a cylindrical and a spherical system are written as

$$\begin{Vmatrix} \sigma_r & \tau_{r\theta} & \tau_{rz} \\ \tau_{r\theta} & \sigma_\theta & \tau_{\theta z} \\ \tau_{rz} & \tau_{\theta z} & \sigma_z \end{Vmatrix}, \quad \begin{Vmatrix} \sigma_\rho & \tau_{\rho\theta} & \tau_{\rho\varphi} \\ \tau_{\rho\theta} & \sigma_\theta & \tau_{\theta\varphi} \\ \tau_{\rho\varphi} & \tau_{\theta\varphi} & \sigma_\varphi \end{Vmatrix}.$$

Figure 1 shows planes normal to the co-ordinate directions x, y, z and r, θ, z of a Cartesian and a cylindrical co-ordinate

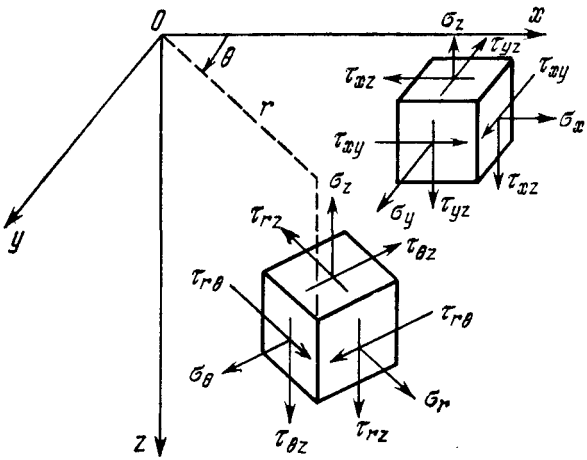

Fig. 1.

system and the stress components on them, which are all considered positive.

Knowing the stress components at a point (of which only six are consequently independent) on three mutually perpendicular planes passing through any point of a body, we can determine the stresses on a fourth plane passing through the same point. Denoting the normal to the fourth plane by n and the projections on the x, y, z axes of the stress acting on this plane by X_n, Y_n, Z_n, we have three formulas to determine the unknown projections:

$$\left.\begin{aligned} X_n &= \sigma_x \cos(n, x) + \tau_{xy} \cos(n, y) + \tau_{xz} \cos(n, z), \\ Y_n &= \tau_{xy} \cos(n, x) + \sigma_y \cos(n, y) + \tau_{yz} \cos(n, z), \\ Z_n &= \tau_{xz} \cos(n, x) + \tau_{yz} \cos(n, y) + \sigma_z \cos(n, z). \end{aligned}\right\} \quad (1.1)$$

Similar formulas can be written in cylindrical, spherical, and other curvilinear co-ordinates. Besides Cartesian co-ordinates, only cylindrical and spherical co-ordinates will be encountered in this book.

In this chapter we shall also use another notation for the stress components in the derivation of some theoretical propositions, namely σ_{ii} $(i = 1, 2, 3)$ for the normal stresses and σ_{ij} $(i \neq j, i, j = 1, 2, 3)$ for the shearing stresses.

The projections of the displacement of a point on the axes of Cartesian, cylindrical, and spherical co-ordinates are denoted as

u, v, w (Cartesian),

u_r, u_θ, w (cylindrical),

$u_\rho, u_\theta, u_\varphi$ (spherical).

The deformation of a body in the neighbourhood of a given point is characterized by the components of strain, namely three extensions and three shearing strains. The first three are denoted by the letter ε with a subscript indicating the original direction of a segment, which lengthens or shortens, the last three are denoted by the letter γ with two subscripts indicating the original perpendicular directions (for example, ε_x and ε_y are the extensions of segments originally parallel to x and y, γ_{xy} is the change in angle between segments whose original directions were x and y).

The strain components ε_i and $\frac{1}{2}\gamma_{ij}$ constitute a symmetrical tensor of rank two. Written as a matrix, it is of the form, for a Cartesian system x, y, z,

$$\begin{Vmatrix} \varepsilon_x & \frac{1}{2}\gamma_{xy} & \frac{1}{2}\gamma_{xz} \\ \frac{1}{2}\gamma_{xy} & \varepsilon_y & \frac{1}{2}\gamma_{yz} \\ \frac{1}{2}\gamma_{xz} & \frac{1}{2}\gamma_{yz} & \varepsilon_z \end{Vmatrix}.$$

For other orthogonal co-ordinate systems this matrix is written in a similar way, and we shall not give it here.

We further indicate the relation between the components of strain (in certain cases we shall denote them by ε_{ii}, ε_{ij})

and the projections of displacement in three co-ordinate systems.

(1) Cartesian system:

$$\left.\begin{aligned} &\varepsilon_x = \frac{\partial u}{\partial x}, \qquad \varepsilon_y = \frac{\partial v}{\partial y}, \qquad \varepsilon_z = \frac{\partial w}{\partial z}, \\ &\gamma_{yz} = \frac{\partial v}{\partial z} + \frac{\partial w}{\partial y}, \quad \gamma_{xz} = \frac{\partial w}{\partial x} + \frac{\partial u}{\partial z}, \quad \gamma_{xy} = \frac{\partial u}{\partial y} + \frac{\partial v}{\partial x}. \end{aligned}\right\} \tag{1.2}$$

(2) Cylindrical system:

$$\left.\begin{aligned} &\varepsilon_r = \frac{\partial u_r}{\partial r}, \quad \varepsilon_\theta = \frac{1}{r}\frac{\partial u_\theta}{\partial \theta} + \frac{u_r}{r}, \quad \varepsilon_z = \frac{\partial w}{\partial z}, \\ &\gamma_{\theta z} = \frac{\partial u_\theta}{\partial z} + \frac{1}{r}\frac{\partial w}{\partial \theta}, \quad \gamma_{rz} = \frac{\partial w}{\partial r} + \frac{\partial u_r}{\partial z}, \\ &\gamma_{r\theta} = \frac{1}{r}\frac{\partial u_r}{\partial \theta} + \frac{\partial u_\theta}{\partial r} - \frac{u_\theta}{r}. \end{aligned}\right\} \tag{1.3}$$

(3) Spherical system:

$$\left.\begin{aligned} &\varepsilon_\rho = \frac{\partial u_\rho}{\partial \rho}, \quad \varepsilon_\theta = \frac{1}{\rho}\frac{\partial u_\theta}{\partial \theta} + \frac{u_\rho}{\rho}, \\ &\varepsilon_\varphi = \frac{1}{\rho \sin\theta}\frac{\partial u_\varphi}{\partial \varphi} + \frac{u_\theta}{\rho}\cot\theta + \frac{u_\rho}{\rho}, \\ &\gamma_{\theta\varphi} = \frac{1}{\rho}\left(\frac{\partial u_\varphi}{\partial \theta} - u_\varphi \cot\theta\right) + \frac{1}{\rho\sin\theta}\frac{\partial u_\theta}{\partial \varphi}, \\ &\gamma_{\rho\varphi} = \frac{1}{\rho\sin\theta}\frac{\partial u_\rho}{\partial \varphi} + \frac{\partial u_\varphi}{\partial \rho} - \frac{u_\varphi}{\rho}, \\ &\gamma_{\rho\theta} = \frac{1}{\rho}\frac{\partial u_\rho}{\partial \theta} + \frac{\partial u_\theta}{\partial \rho} - \frac{u_\theta}{\rho}. \end{aligned}\right\} \tag{1.4}$$

If the strains are not small, the extensions and shears, ε_i, γ_{ij}, are related to the displacements by non-linear equations. An example are the relations for a Cartesian co-ordinate system:

$$\left.\begin{aligned} &\varepsilon_x = \sqrt{1 + 2\frac{\partial u}{\partial x} + \left(\frac{\partial u}{\partial x}\right)^2 + \left(\frac{\partial v}{\partial x}\right)^2 + \left(\frac{\partial w}{\partial x}\right)^2} - 1, \\ &\varepsilon_y = \sqrt{1 + 2\frac{\partial v}{\partial y} + \left(\frac{\partial u}{\partial y}\right)^2 + \left(\frac{\partial v}{\partial y}\right)^2 + \left(\frac{\partial w}{\partial y}\right)^2} - 1, \\ &\sin\gamma_{xy} = \frac{\dfrac{\partial u}{\partial y} + \dfrac{\partial v}{\partial x} + \dfrac{\partial u}{\partial x}\dfrac{\partial u}{\partial y} + \dfrac{\partial v}{\partial x}\dfrac{\partial v}{\partial y} + \dfrac{\partial w}{\partial x}\dfrac{\partial w}{\partial y}}{(1+\varepsilon_x)(1+\varepsilon_y)}. \end{aligned}\right\} \tag{1.5}$$

The other three components, ε_z, γ_{yz}, γ_{xz}, are found from (1.5) by cyclic permutation of the subscripts.

Finally, what we shall need in the following is the differential equations of equilibrium and motion for a continuous medium (not necessarily elastic). The equilibrium equations are written as (denoting the projections of body forces per unit volume on the co-ordinate directions, respectively, by X, Y, Z; R, Θ, Z; P, Θ, Φ)

(1) Cartesian co-ordinate system:

$$\left.\begin{aligned}
&\frac{\partial\sigma_x}{\partial x}+\frac{\partial\tau_{xy}}{\partial y}+\frac{\partial\tau_{xz}}{\partial z}+X=0,\\
&\frac{\partial\tau_{xy}}{\partial x}+\frac{\partial\sigma_y}{\partial y}+\frac{\partial\tau_{yz}}{\partial z}+Y=0,\\
&\frac{\partial\tau_{xz}}{\partial x}+\frac{\partial\tau_{yz}}{\partial y}+\frac{\partial\sigma_z}{\partial z}+Z=0;
\end{aligned}\right\}\tag{1.6}$$

(2) cylindrical system:

$$\left.\begin{aligned}
&\frac{\partial\sigma_r}{\partial r}+\frac{1}{r}\frac{\partial\tau_{r\theta}}{\partial\theta}+\frac{\partial\tau_{rz}}{\partial z}+\frac{\sigma_r-\sigma_\theta}{r}+R=0,\\
&\frac{\partial\tau_{r\theta}}{\partial r}+\frac{1}{r}\frac{\partial\sigma_\theta}{\partial\theta}+\frac{\partial\tau_{\theta z}}{\partial z}+\frac{2\tau_{r\theta}}{r}+\Theta=0,\\
&\frac{\partial\tau_{rz}}{\partial r}+\frac{1}{r}\frac{\partial\tau_{\theta z}}{\partial\theta}+\frac{\partial\sigma_z}{\partial z}+\frac{\tau_{rz}}{r}+Z=0;
\end{aligned}\right\}\tag{1.7}$$

(3) spherical system:

$$\left.\begin{aligned}
&\frac{\partial\sigma_\rho}{\partial\rho}+\frac{1}{\rho}\frac{\partial\tau_{\rho\theta}}{\partial\theta}+\frac{1}{\rho\sin\theta}\frac{\partial\tau_{\rho\varphi}}{\partial\varphi}+\\
&\qquad+\frac{1}{\rho}(2\sigma_\rho-\sigma_\theta-\sigma_\varphi+\tau_{\rho\theta}\cot\theta)+P=0,\\
&\frac{\partial\tau_{\rho\theta}}{\partial\rho}+\frac{1}{\rho}\frac{\partial\sigma_\theta}{\partial\theta}+\frac{1}{\rho\sin\theta}\frac{\partial\tau_{\theta\varphi}}{\partial\varphi}+\\
&\qquad+\frac{1}{\rho}[(\sigma_\theta-\sigma_\varphi)\cot\theta+3\tau_{\rho\theta}]+\Theta=0,\\
&\frac{\partial\tau_{\rho\varphi}}{\partial\rho}+\frac{1}{\rho}\frac{\partial\tau_{\theta\varphi}}{\partial\theta}+\frac{1}{\rho\sin\theta}\frac{\partial\sigma_\varphi}{\partial\varphi}+\\
&\qquad+\frac{1}{\rho}(2\tau_{\theta\varphi}\cot\theta+3\tau_{\rho\varphi})+\Phi=0.
\end{aligned}\right\}\tag{1.8}$$

The equations of motion are easily obtained from the equations of equilibrium by adding inertia terms to the body forces. The inertia terms are equal to the density $\bar{\rho}$ times the negative of the projections of acceleration, which are usually expressed in terms of the projections of displacement. Thus, for a Cartesian co-ordinate system and small strains, to the functions X, Y, Z must be added

$$-\bar{\rho}\frac{\partial^2 u}{\partial t^2}, \qquad -\bar{\rho}\frac{\partial^2 v}{\partial t^2}, \qquad -\bar{\rho}\frac{\partial^2 w}{\partial t^2}$$

(the displacements are functions of the co-ordinates of points of a body before deformation and the time t). The other equations of motion will not be needed in later parts of the book, and we therefore leave the discussion at this point.

2. Transformation of Stress Components to New Axes

In practice cases frequently occur where the stress components referred to one co-ordinate system x, y, z ("old") are known, and it is required to determine them for another system x', y', z' ("new"). It is assumed that both systems are orthogonal, but not necessarily Cartesian.

Retaining the previous notation for the stress components referred to the system x, y, z, and indicating the components in the new system x', y', z' by primes, we obtain the required transformation formulas by using expressions (1.1) for the projections of the stress on a plane with an arbitrarily directed normal. We assign the cosines of the angles between the axes of the old and new co-ordinate systems by Table 1. Thus, $l_{11} = \cos(x', x)$, $l_{23} = \cos(y', z)$, etc.

Consider a plane with normal x' and the stress on it with projections $X_{x'}$, $Y_{x'}$, $Z_{x'}$ on the old axes. By projecting the stresses on the directions of the axes of the new system, we obtain

$$\left.\begin{aligned} \sigma'_x &= X_{x'}l_{11} + Y_{x'}l_{12} + Z_{x'}l_{13}, \\ \tau'_{xy} &= X_{x'}l_{21} + Y_{x'}l_{22} + Z_{x'}l_{23}, \\ \tau'_{xz} &= X_{x'}l_{31} + Y_{x'}l_{32} + Z_{x'}l_{33}. \end{aligned}\right\} \tag{2.1}$$

Cosines **Table 1**

	x	y	z
x'	l_{11}	l_{12}	l_{13}
y'	l_{21}	l_{22}	l_{23}
z'	l_{31}	l_{32}	l_{33}

Substituting expressions (1.1), where $n = x'$, we obtain three stress components as homogeneous quadratic functions of the cosines l_{ij}. We next consider the stresses on planes with normals y', z'.

Below are two final formulas:

$$\left.\begin{aligned}\sigma'_x &= \sigma_x l_{11}^2 + \sigma_y l_{12}^2 + \sigma_z l_{13}^2 + \\ &\qquad + 2\tau_{yz} l_{12} l_{13} + 2\tau_{xz} l_{11} l_{13} + 2\tau_{xy} l_{11} l_{12}, \\ \tau'_{yz} &= \sigma_x l_{21} l_{31} + \sigma_y l_{22} l_{32} + \sigma_z l_{23} l_{33} + \\ &\quad + \tau_{yz}(l_{22} l_{33} + l_{23} l_{32}) + \tau_{xz}(l_{21} l_{33} + l_{23} l_{31}) + \\ &\qquad + \tau_{xy}(l_{21} l_{32} + l_{22} l_{31}).\end{aligned}\right\} \quad (2.2)$$

The remaining four components of σ', τ' are found by cyclic permutation of the subscripts of l_{ij}.

In a similar way we obtain formulas for the inverse transformation from the stresses σ', τ' to the stresses σ, τ. We give two of these:

$$\left.\begin{aligned}\sigma_x &= \sigma'_x l_{11}^2 + \sigma'_y l_{21}^2 + \sigma'_z l_{31}^2 + \\ &\qquad + 2\tau'_{yz} l_{21} l_{31} + 2\tau'_{xz} l_{11} l_{31} + 2\tau'_{xy} l_{11} l_{21}, \\ \tau_{yz} &= \sigma'_x l_{12} l_{13} + \sigma'_y l_{22} l_{23} + \sigma'_z l_{32} l_{33} + \\ &\quad + \tau'_{yz}(l_{22} l_{33} + l_{23} l_{32}) + \tau'_{xz}(l_{12} l_{33} + l_{32} l_{13}) + \\ &\qquad + \tau'_{xy}(l_{12} l_{23} + l_{22} l_{13}).\end{aligned}\right\} \quad (2.3)$$

The formulas for the transformation of stresses to new axes can easily be written by using the concise tensor nota-

tion [31], with the necessary change, as noted above, of the notation for the stress components. Let us denote (for the present) all stress components by a single letter σ with two subscripts: like subscripts for the normal components and unlike subscripts for the tangential components (σ_{ij}). Thus, $\sigma_{11} = \sigma_x$, $\sigma_{23} = \tau_{yz}$, etc. The six formulas for the transformation of stress components to new axes are then written as a single formula:

$$\sigma'_{kl} = \sum_{i=1}^{3} \sum_{j=1}^{3} \sigma_{ij} l_{ki} l_{lj}. \tag{2.4}$$

In this notation the summation signs are usually omitted

$$\sigma'_{kl} = \sigma_{ij} l_{ki} l_{lj}. \tag{2.5}$$

In this formula k, l are fixed, and i, j are indices to be summed from 1 to 3. The formulas for the transformation from σ'_{ij} to σ_{ij} are written in a similar way:

$$\sigma_{ij} = \sigma'_{kl} l_{ki} l_{lj}. \tag{2.6}$$

Here the indices i, j are fixed, and k, l are summed.

We give formulas for the transformation between stresses in a Cartesian co-ordinate system and stresses in a cylindrical system r, θ, z (the z axes of both systems are coincident).

Cosines **Table 2**

	x	y	z
x'	$\cos\theta$	$-\sin\theta$	0
y'	$\sin\theta$	$\cos\theta$	0
z'	0	0	1

Table 1 for the cosines takes the form of Table 2. The fina formulas are written as

$$\left.\begin{aligned}
\sigma_r &= \sigma_x \cos^2\theta + \sigma_y \sin^2\theta + 2\tau_{xy} \sin\theta\cos\theta,\\
\sigma_\theta &= \sigma_x \sin^2\theta + \sigma_y \cos^2\theta - 2\tau_{xy} \sin\theta\cos\theta,\\
\tau_{r\theta} &= (\sigma_y - \sigma_x)\sin\theta\cos\theta + \tau_{xy}(\cos^2\theta - \sin^2\theta),\\
\tau_{rz} &= \tau_{xz}\cos\theta + \tau_{yz}\sin\theta,\\
\tau_{\theta z} &= -\tau_{xz}\sin\theta + \tau_{yz}\cos\theta, \quad \sigma_z = \sigma_z.
\end{aligned}\right\} \quad (2.7$$

The formulas retain the same form for rotation transformation, i.e., for the transformation from the stresses σ_x, σ_y, . . ., τ_{xy} to stresses σ'_x, σ'_y, . . ., τ'_{xy} referred to a co-ordinate system x', y', z' obtained by rotating the firs system through an angle φ about the z axis ($\theta = \varphi$).

The transformation of strain components to new axes i made by formulas closely similar to (2.5)-(2.7) since these components constitute a tensor analogous to the stress tensor. On comparing these two tensors, we see that to the normal stress σ corresponds the extension ε, and to the shearing stress τ corresponds one half of the like shear, $\frac{1}{2}\gamma$. Consequently, the formulas for strain components referred to new axes are obtained from (2.3) by substituting ε for σ and $\frac{1}{2}\gamma$ for τ.

3. Generalized Hooke's Law

The foregoing formulas and equations are valid for every continuous medium, irrespective of its physical properties. Proceeding to an elastic body, we must choose a model reflecting the elastic properties to obtain, in addition to the equations of Secs. 1 and 2, relations between the strain and stress components. Since we are considering only small strains, the model in question is taken to be a continuous medium following the generalized Hooke's law. In other words, we shall consider only such media and bodies in which the strain components are linear functions of the stress components. These functions must be homogeneous since it is assumed that in the absence of stresses the strain

components are also zero, and vice versa, i.e., if $\varepsilon = \gamma = 0$, then $\sigma = \tau = 0$.

Bodies obeying the generalized Hooke's law may be different, and hence it is necessary to give a classification reflecting their features, if only approximately. As far as the elastic properties are concerned, all bodies may be divided, on the one hand, into homogeneous and non-homogeneous, and, on the other hand, into isotropic and anisotropic. By a homogeneous body, with regard to its elastic properties, is meant one whose elastic properties are the same at different points; a non-homogeneous body has different elastic properties at different points. If the elastic characteristics, for example the elastic moduli (see below), vary from point to point in a continuous manner, the non-homogeneity may also be termed continuous; if, however, the elastic characteristics undergo discontinuities in passing from point to point, for example change abruptly, the non-homogeneity is said to be discontinuous or discrete. A stepwise change occurs in bodies composed of several parts with different elastic properties (of different materials).

An isotropic body, with regard to its elastic properties, is one in which these properties (elastic resistance) are the same for all directions drawn through a given point; an anisotropic body has, in general, different elastic properties for different directions drawn through a given point. Directions for which the elastic properties (elastic resistance) are the same are said to be elastically equivalent. For an isotropic body all directions drawn through a given point are elastically equivalent, while for an anisotropic body not all, but only some are. Depending on the structure, a body may be isotropic or anisotropic and at the same time homogeneous or non-homogeneous. Note, further, that two basic types of anisotropy may be distinguished in different media: (1) rectilinear and (2) curvilinear. Rectilinear anisotropy is discussed in this section, and curvilinear anisotropy will be taken up later, in Sec. 10.

In the general case of anisotropy each strain component is a linear function of all six stress components. Consider a homogeneous body having anisotropy of the most general kind. Referring it to a Cartesian co-ordinate system whose position, for the present, is left unspecified, we write down

the equations expressing the generalized Hooke's law for this system (with obvious abridgements):

$$\left.\begin{aligned}
\varepsilon_x &= a_{11}\sigma_x + a_{12}\sigma_y + a_{13}\sigma_z + a_{14}\tau_{yz} + a_{15}\tau_{xz} + a_{16}\tau_{xy},\\
\varepsilon_y &= a_{21}\sigma_x + a_{22}\sigma_y + \ldots \qquad\qquad\qquad\qquad + a_{26}\tau_{xy},\\
&\ldots\ldots\ldots\ldots\ldots\ldots\ldots\ldots\ldots\ldots\\
\gamma_{xy} &= a_{61}\sigma_x + a_{62}\sigma_y + \ldots \qquad\qquad\qquad\qquad + a_{66}\tau_{xy}.
\end{aligned}\right\} \tag{3.1}$$

In the general case Eqs. (3.1) contain 36 coefficients a_{ij}, but actually they are always fewer, as will be shown later.

Suppose that the sixth-order determinant of the coefficients a_{ij}, written down successively, is not zero, and hence Eqs. (3.1) are solvable for σ and τ. We obtain the generalized Hooke's law equations for the general case in an alternative, equivalent, form:

$$\left.\begin{aligned}
\sigma_x &= A_{11}\varepsilon_x + A_{12}\varepsilon_y + A_{13}\varepsilon_z + A_{14}\gamma_{yz} + A_{15}\gamma_{xz} + A_{16}\gamma_{xy},\\
\sigma_y &= A_{21}\varepsilon_x + A_{22}\varepsilon_y + \ldots \qquad\qquad\qquad\qquad + A_{26}\gamma_{xy},\\
&\ldots\ldots\ldots\ldots\ldots\ldots\ldots\ldots\ldots\ldots\\
\tau_{xy} &= A_{61}\varepsilon_x + A_{62}\varepsilon_y + \ldots \qquad\qquad\qquad\qquad + A_{66}\gamma_{xy}.
\end{aligned}\right\} \tag{3.2}$$

Suppose that a body for which Eqs. (3.1) and (3.2) are true is extended by constant forces p parallel to one of the co-ordinate axes, say the x axis. Then $\sigma_x = p$ and the remaining five stress components are zero. The strain components, as found from Eqs. (3.1). are constant for every point

$$\left.\begin{aligned}
\varepsilon_x &= a_{11}p, \quad & \varepsilon_y &= a_{21}p, \quad & \varepsilon_z &= a_{31}p,\\
\gamma_{yz} &= a_{41}p, \quad & \gamma_{xz} &= a_{51}p, \quad & \gamma_{xy} &= a_{61}p.
\end{aligned}\right\} \tag{3.3}$$

It is obvious that small segments passing through different points and parallel to the x axis lengthen by the same amount, and, in general, all segments parallel to the same direction n and drawn through different points undergo equal elongations (dependent on the constants a_{ij} and proportional to p). For this reason, the anisotropy of the homogeneous body under consideration may be termed rectilinear, and the body itself rectilinearly anisotropic. In such a body all parallel directions are elastically equivalent. It follows from formulas (3.3) that under simple (or biaxial and triaxial)

tension elements of the same size in the form of rectangular parallelepipeds with respective parallel faces deform identically, no matter where they are isolated, and transform, in general, into oblique parallelepipeds having no right angles between the faces.

Note that we may agree, exclusively for ease of presentation, to describe a non-homogeneous body as "rectilinearly anisotropic" if the generalized Hooke's law equations for it are given in a Cartesian co-ordinate system (a_{ij}, A_{ij} are given functions of x, y, z).

We return to a homogeneous body. In a homogeneous body the coefficients a_{ij} and A_{ij} from Eqs. (3.1) and (3.2) will be called the elastic constants. In a non-homogeneous body, when these coefficients are functions of position, they will be called the elastic characteristics. Considering a_{ij} and A_{ij} separately, we shall refer, following P. V. Bekhterev, to a_{ij} as the strain coefficients, and to A_{ij} as the elastic moduli [8, 51]. In the literature there are some other names and symbols for these quantities. For example, in Voigt's book [38] the symbols s_{ij} and c_{ij} are used for a_{ij} and A_{ij}, respectively; A. K. Malmeister employs the terms compliance constants and elasticity constants for the strain coefficients and the elastic moduli, respectively ([31], Chap. II, Sec. 21).

Equations (3.1) and (3.2) show that the number of elastic constants in every body is 36. Actually this is not so even in the most general case if there exists an elastic potential (and this will always be assumed) equal to strain energy per unit volume. This is the case when changes in a body take place isothermally or adiabatically during deformation. Considering only equilibrium problems, we shall assume that changes take place isothermally during deformation, i.e., the temperature of each element remains constant. In Eqs. (3.1) and (3.2), by a_{ij} and A_{ij} are implied isothermal elastic constants, which are in general different from adiabatic ones (see [23], pp. 66-67 or [29], p. 106; see also [26], Chap. 1, Sec. 2).

In this case we have the equalities

$$\sigma_x = \frac{\partial \overline{V}}{\partial \varepsilon_x}, \quad \sigma_y = \frac{\partial \overline{V}}{\partial \varepsilon_y}, \quad \ldots, \quad \tau_{xy} = \frac{\partial \overline{V}}{\partial \gamma_{xy}}. \tag{3.4}$$

We differentiate the stress components with respect to the strain components:

$$\frac{\partial\sigma_x}{\partial\varepsilon_y}=\frac{\partial\sigma_y}{\partial\varepsilon_x}, \qquad \frac{\partial\sigma_x}{\partial\gamma_{xy}}=\frac{\partial\tau_{xy}}{\partial\varepsilon_x}, \text{ etc.} \tag{3.5}$$

It follows from equalities (3.5) and (3.2) that

$$A_{21}=A_{12},\ A_{31}=A_{13},\ \ldots,\ A_{65}=A_{56}$$

and, in general,

$$A_{ij}=A_{ji} \quad (i,\ j=1,\ 2,\ \ldots,\ 6). \tag{3.6}$$

By solving Eqs. (3.2) for ε and γ, we obtain six expressions for ε and γ in which the coefficients on the right-hand sides are also symmetrical:

$$a_{ij}=a_{ji} \quad (i,\ j=1,\ 2,\ \ldots,\ 6). \tag{3.7}$$

We can now write the generalized Hooke's law equations in the general case as

$$\left.\begin{aligned}
\varepsilon_x &= a_{11}\sigma_x+a_{12}\sigma_y+\ldots+a_{16}\tau_{xy},\\
\varepsilon_y &= a_{12}\sigma_x+a_{22}\sigma_y+\ldots+a_{26}\tau_{xy},\\
&\ldots\ldots\ldots\ldots\ldots\ldots\\
\gamma_{xy} &= a_{16}\sigma_x+a_{26}\sigma_y+\ldots+a_{66}\tau_{xy},
\end{aligned}\right\} \tag{3.8}$$

or

$$\left.\begin{aligned}
\sigma_x &= A_{11}\varepsilon_x+A_{12}\varepsilon_y+\ldots+A_{16}\gamma_{xy},\\
\sigma_y &= A_{12}\varepsilon_x+A_{22}\varepsilon_y+\ldots+A_{26}\gamma_{xy},\\
&\ldots\ldots\ldots\ldots\ldots\ldots\\
\tau_{xy} &= A_{16}\varepsilon_x+A_{26}\varepsilon_y+\ldots+A_{66}\gamma_{xy}.
\end{aligned}\right\} \tag{3.9}$$

By integrating the six equations (3.4), we obtain an expression for the elastic potential in the form of a homogeneous quadratic function of the strains:

$$\begin{aligned}
\overline{V}=\frac{1}{2}A_{11}\varepsilon_x^2+A_{12}\varepsilon_x\varepsilon_y+\ldots+A_{15}\varepsilon_x\gamma_{xz}+A_{16}\varepsilon_x\gamma_{xy}+\\
+\frac{1}{2}A_{22}\varepsilon_y^2+\ldots+A_{25}\varepsilon_y\gamma_{xz}+A_{26}\varepsilon_y\gamma_{xy}+\\
\ldots\ldots\ldots\ldots\ldots\ldots\ldots\ldots\\
+\frac{1}{2}A_{55}\gamma_{xz}^2+A_{56}\gamma_{xz}\gamma_{xy}+\\
+\frac{1}{2}A_{66}\gamma_{xy}^2.
\end{aligned} \tag{3.10}$$

By breaking (3.10) into six groups, each of six terms,

$$\overline{V} = \frac{1}{2}(A_{11}\varepsilon_x + \ldots + A_{16}\gamma_{xy})\,\varepsilon_x + \ldots$$
$$\ldots + \frac{1}{2}(A_{16}\varepsilon_x + \ldots + A_{66}\gamma_{xy})\,\gamma_{xy}, \qquad (3.11)$$

and substituting the expressions for σ_x, σ_y, . . ., τ_{xy}, we obtain a formula that is very simple, and easy to remember, for the elastic potential:

$$\overline{V} = \frac{1}{2}(\sigma_x\varepsilon_x + \sigma_y\varepsilon_y + \ldots + \tau_{xy}\gamma_{xy}). \qquad (3.12)$$

If the expressions for the strain components (3.8) are substituted in this formula, we obtain $\overline{V}$ as a homogeneous quadratic function of the stresses. The expression for $\overline{V}$ is constructed in the same way as (3.10), the only difference being that ε, γ are replaced by σ, τ with the corresponding subscripts, and A_{ij} are replaced by the strain coefficients a_{ij}:

$$\overline{V} = \frac{1}{2}a_{11}\sigma_x^2 + a_{12}\sigma_x\sigma_y + \ldots + a_{16}\sigma_x\tau_{xy} +$$
$$+ \frac{1}{2}a_{22}\sigma_y^2 + \ldots + a_{26}\sigma_y\tau_{xy} +$$
$$\ldots\ldots\ldots\ldots\ldots\ldots$$
$$+ \frac{1}{2}a_{66}\tau_{xy}^2. \qquad (3.13)$$

In general case of anisotropy the number of elastic constants A_{ij}, a_{ij} is 21, but among these the *independent* constants are fewer. V. V. Novozhilov [34] states that, geometrically, all co-ordinate systems are equivalent, nevertheless as regards the elastic and, in general, physical properties symmetry may be observed even in the most general case.* Consequently, even in the most general case the number of independent elastic constants is not 21, but fewer, viz. 18. In Novozhilov's course (Secs. 19 and 20) it is recommended that the so-called invariant constants be

* See also [21], [73].

used in stress analysis, and it is shown how they can be determined from the constants a_{ij} referred to an arbitrary co-ordinate system. We shall not elaborate upon this point in the future, but in each case it will be assumed that a system of co-ordinates x, y, z (or a curvilinear system) and the constants a_{ij} and A_{ij} referred to it are given. For bodies with well developed elastic symmetry, however, it is possible to indicate at once axes for which the constants a_{ij}, A_{ij} are invariant (for example, for an orthotropic and a transversely isotropic body; see Sec. 4).

In the generalized Hooke's law equations (3.8) and (3.9), the elastic constants (or characteristics) take up unlike positions, and they must be somehow classified. One of the principles of classification in the general case was suggested by P.V. Bekhterev who divided all coefficients a_{ij} (and accordingly A_{ij}) into six groups [8]. In this work the author very thoroughly investigated (theoretically) the generalized Hooke's law equations.

Other authors, as N.G. Chentsov [61], Ya.I. Sekerzh-Zen'kovich [119], replace the constants a_{ij} and A_{ij} in special cases of anisotropy by the so-called engineering constants, namely Young's and shear moduli, Poisson's ratios, etc. A.L. Rabinovich proposed a comprehensive system of engineering constants for the most general case of a homogeneous anisotropic body [108]. Let a body be referred to some fixed coordinate system. Introducing new symbols for a_{ij}, we can, following A.L. Rabinovich, write Eqs. (3.8) as follows:

$$\left.\begin{aligned}
\varepsilon_x &= \frac{1}{E_{xx}}(\sigma_x - \nu_{yx}\sigma_y - \nu_{zx}\sigma_z + \\
&\qquad + \eta_{yz,\,x}\tau_{yz} + \eta_{zx,\,x}\tau_{xz} + \eta_{xy,\,x}\tau_{xy}) \\
\varepsilon_y &= \frac{1}{E_{yy}}(-\nu_{xy}\sigma_x + \sigma_y - \nu_{zy}\sigma_z + \\
&\qquad + \eta_{yz,\,y}\tau_{yz} + \eta_{zx,\,y}\tau_{xz} + \eta_{xy,\,y}\tau_{xy}), \\
\varepsilon_z &= \frac{1}{E_{zz}}(-\nu_{xz}\sigma_x - \nu_{yz}\sigma_y + \sigma_z + \\
&\qquad + \eta_{yz,\,z}\tau_{yz} + \eta_{zx,\,z}\tau_{xz} + \eta_{xy,\,z}\tau_{xy}),
\end{aligned}\right\} \qquad (3.14$$

$$\left.\begin{aligned}
\gamma_{yz} &= \frac{1}{G_{yz}}(\eta_{x,\,yz}\sigma_x + \eta_{y,\,yz}\sigma_y + \eta_{z,\,yz}\sigma_z + \\
&\qquad + \tau_{yz} + \mu_{zx,\,yz}\tau_{xz} + \mu_{xy,\,yz}\tau_{xy}), \\
\gamma_{xz} &= \frac{1}{G_{xz}}(\eta_{x,\,zx}\sigma_x + \eta_{y,\,zx}\sigma_y + \eta_{z,\,zx}\sigma_z + \\
&\qquad + \mu_{yz,\,zx}\tau_{yz} + \tau_{xz} + \mu_{xy,\,zx}\tau_{xy}), \\
\gamma_{xy} &= \frac{1}{G_{xy}}(\eta_{x,\,xy}\sigma_x + \eta_{y,\,xy}\sigma_y + \eta_{z,\,xy}\sigma_z + \\
&\qquad + \mu_{yz,\,xy}\tau_{yz} + \mu_{zx,\,xy}\tau_{xz} + \tau_{xy}).
\end{aligned}\right\}$$

Here E_{xx}, E_{yy}, E_{zz} are Young's moduli in tension-compression in the directions of the x, y, z axes; G_{yz}, G_{xz}, G_{xy} are the shear moduli for planes parallel to the co-ordinate planes; ν_{yx}, ν_{zx}, . . ., ν_{yz} are Poisson's ratios characterizing the contraction in the direction of one axis when tension is applied in the direction of another axis (for example, ν_{yx} is the ratio characterizing the contraction in the direction of the x axis when tension is applied in the direction of the y axis). These constants correspond to the well known Young's modulus, shear modulus, and Poisson's ratio for an isotropic body. The other constants are new for an elastic body and are zero in an isotropic body.

The coefficients $\mu_{zx,\,yz}$, . . ., $\mu_{zx,\,xy}$ are termed Chentsov's coefficients; they characterize shears in planes parallel to the co-ordinate planes produced by shearing stresses acting in other planes parallel to the co-ordinate planes. The constants $\eta_{yz,\,x}$, $\eta_{zx,\,x}$, . . ., $\eta_{xy,\,z}$ are, according to A.L. Rabinovich, the mutual influence coefficients of the first kind; they characterize extensions in the directions of the co-ordinate axes produced by shearing stresses acting in the co-ordinate planes. Finally, $\eta_{x,\,yz}$, $\eta_{y,\,yz}$, . . ., $\eta_{z,\,xy}$ express shears in the co-ordinate planes due to normal stresses acting in the directions of the coordinate axes; they are termed the mutual influence coefficients of the second kind.*

* It seems to us that there is no need to identify Young's moduli by two-letter subscripts; one letter will suffice. The subscripts on Poisson's ratios must be interchanged to make them agree with the notation previously introduced by other authors.

Equations (3.14) are all written down only for the given co-ordinate system; for other systems the values of the coefficients change, but the total number of independent elastic constants is, as before, 18.

In solving specific problems, we shall mostly use the symbols a_{ij} and A_{ij}; the engineering constants will be introduced in cases where a body has well developed elastic symmetry, i.e., it is orthotropic or transversely isotropic.

We finally note that, by changing the notation for the elastic constants and stress components, we can write the generalized Hooke's law equations in an extremely simple form. Let the elastic constants be denoted by the letter a (or accordingly A), not with two, but with four subscripts, setting

(1) $a_{ij} = a_{mnkl}$ if $i, j = 1, 2, 3$ (all possible cases where $j = i$ are not excluded);

(2) $a_{ij} = 2a_{mnkl}$ if either of the two subscripts, i or j, is 4, 5, 6;

(3) $a_{ij} = 4a_{mnkl}$ if both subscripts $i, j = 4, 5, 6$.

The six equations (3.8) are then written as a single one [31]:

$$\varepsilon_{ij} = a_{ijkl}\sigma_{kl} \quad (i, j, k, l = 1, 2, 3). \tag{3.15}$$

The signs denoting summation over k and over l in each of the six equalities (3.15) are usually omitted in this system of writing. The number of all constants a_{ijkl} with four subscripts is 81, but, when grouped, they reduce to constants whose number is 21 (of these 18 constants are independent). The generalized Hooke's law equations, solved for the stress components, are of the form

$$\sigma_{ij} = A_{ijkl}\varepsilon_{kl}. \tag{3.16}$$

However, the notation for the elastic constants by means of the letters a and A with four subscripts and Eqs. (3.15), (3.16) will be used just once throughout this book, in Sec. 5. We shall therefore not elaborate upon this point, but refer the reader to the book by A.K. Malmeister, V.P. Tamuzh, and G.A. Teters [31] (Chap. II, Sec. 21).

4. Basic Cases of Elastic Symmetry

If the structure of an anisotropic body has some kind of symmetry, the elastic properties also exhibit symmetry. The elastic symmetry (as it is commonly called) is expressed in the fact that at each point there are symmetrical directions equivalent as regards the elastic properties.

The relationship between the structural symmetry and the elastic symmetry for crystals is established by F. Neumann's principle, which may be stated as follows: with respect to its physical properties (including the elastic properties), a material exhibits the same kind of symmetry as its crystallographic form, or more perfect symmetry (see [29], p. 155). The principle is also extended to bodies that are not crystals, but have structural symmetry (wood, plywood, glass-fibre reinforced plastics).

If there is symmetry of the elastic properties (elastic symmetry) in an anisotropic body, the generalized Hooke's law equations for it are simplified since some of the coefficients a_{ij} are zero, while among others there are linear relations. These simplifications may be derived by applying the following method. Let a body be referred to a co-ordinate system x, y, z, and to a second system, x', y', z', symmetrical with respect to the first one, the symmetry being of the same kind as that observed in the body. The directions of the respective axes of x, y, z and x', y', z' are equivalent as regards the elastic properties, and hence the generalized Hooke's law equations are written identically for the symmetrical co-ordinate systems. After writing these equations in the x, y, z and x', y', z' systems, we next transform to either of them expressing, say, x', y', z' in terms of x, y, z. On comparing the resulting similar equations, we find relationships among a_{ij} and A_{ij}. Instead of the generalized Hooke's law equations we can take the expression for the elastic potential written in the basic system x, y, z and in the symmetrical system x', y', z'. Transforming in the second expression to the x, y, z system, and equating the elastic potentials, we arrive at the same results.

Leaving out the derivation, which may be found, for example, in Chap. VI of Love's book [29], we give the generalized Hooke's law equations and schematic expressions

for the elastic potential in the form of triangular matrices corresponding to the formula for $\bar{V}$ written in terms of the stresses. We shall first consider homogeneous bodies, and then make some remarks concerning non-homogeneous bodies.

The following four cases of elastic symmetry are the most important, and these will now be discussed.

(1) *Plane of elastic symmetry.* Suppose that through each point of a body there passes a plane possessing the following property: every two directions that are symmetrical with respect to this plane are equivalent as regards the elastic properties.* A direction normal to the plane of elastic symmetry will be termed the principal direction of elasticity (or simply the principal direction if no other principal directions, e.g. those of the stress and strain tensors, are considered at the same time). In this case only one principal direction passes through a point of a body.

If the z axis is taken normal to the plane of elastic symmetry and the other two axes lie in this plane, we conclude that eight elastic constants must be zero, namely

$$a_{14} = a_{24} = a_{34} = a_{46} = a_{15} = a_{25} = a_{35} = a_{56} = 0,$$

and the number of elastic constants a_{ij} reduces to 13. The generalized Hooke's law equations are of the form

$$\left.\begin{aligned}
\varepsilon_x &= a_{11}\sigma_x + a_{12}\sigma_y + a_{13}\sigma_z + a_{16}\tau_{xy},\\
\varepsilon_y &= a_{12}\sigma_x + a_{22}\sigma_y + a_{23}\sigma_z + a_{26}\tau_{xy},\\
\varepsilon_z &= a_{13}\sigma_x + a_{23}\sigma_y + a_{33}\sigma_z + a_{36}\tau_{xy},\\
\gamma_{yz} &= a_{44}\tau_{yz} + a_{45}\tau_{xz},\\
\gamma_{xz} &= a_{45}\tau_{yz} + a_{55}\tau_{xz},\\
\gamma_{xy} &= a_{16}\sigma_x + a_{26}\sigma_y + a_{36}\sigma_z + a_{66}\tau_{xy}.
\end{aligned}\right\} \qquad (4.$$

The schematic expression for the elastic potential is (th halves on the diagonal corresponding to the terms σ_x^2, σ_y^2. . .

* Other pairs of symmetrical directions are not, in general, equiva ent to the directions of the first pair.

. . ., τ_{xy}^2 are rejected)

$$\left.\begin{matrix} a_{11} & a_{12} & a_{13} & 0 & 0 & a_{16} \\ & a_{22} & a_{23} & 0 & 0 & a_{26} \\ & & a_{33} & 0 & 0 & a_{36} \\ & & & a_{44} & a_{45} & 0 \\ & & & & a_{55} & 0 \\ & & & & & a_{66} \end{matrix}\right\}. \tag{4.2}$$

By solving Eqs. (4.1) for σ, τ, we obtain equations differing from (4.1) only in that σ, τ are replaced by the corresponding ε, γ, and a_{ij} by A_{ij}. For arbitrary directions of the axes, these equations contain 13 strain coefficients a_{ij}, not explicitly related in any way. Nevertheless, there are 12, and not 13, independent constants in (4.1) and (4.2), and, knowing a_{ij}, we are able, in principle, to find them (Sec. 3).

Consider an element of a body in the form of a rectangular parallelepiped in which two pairs of faces are oriented arbitrarily and the planes of the other two are planes of elastic symmetry. Let these two faces be acted on by uniformly distributed normal forces equivalent to stresses σ_z (Fig. 2). From Eqs. (4.1) we find the strain components:

$$\left.\begin{matrix} \varepsilon_x = a_{13}\sigma_z, & \varepsilon_y = a_{23}\sigma_z, & \varepsilon_z = a_{33}\sigma_z, \\ \gamma_{yz} = 0, & \gamma_{xz} = 0, & \gamma_{xy} = a_{36}\sigma_z. \end{matrix}\right\} \tag{4.3}$$

This shows that in tension or compression in a direction perpendicular to the plane of elastic symmetry the angles between segments normal to the plane of elastic symmetry and lying in it remain right. A rectangular parallelepiped is transformed into a right parallelepiped, i.e., its lateral faces remain rectangular and the bases are changed into parallelograms.

(2) *Three planes of elastic symmetry* (*orthotropic body*). If through each point of a body there pass three mutually perpendicular (orthogonal) planes of elastic symmetry, and the like planes of elastic symmetry are parallel at all points, then, taking the co-ordinate axes normal to the planes of elastic symmetry (along the principal directions), we find

that, in addition to eight elastic constants of the precedin case, there are four more constants equal to zero:

$$a_{16} = a_{26} = a_{36} = a_{45} = 0.$$

The generalized Hooke's law equations and the schemati expression for the elastic potential in terms of the constant a_{ij} take the form

$$\left.\begin{aligned} \varepsilon_x &= a_{11}\sigma_x + a_{12}\sigma_y + a_{13}\sigma_z, \\ \varepsilon_y &= a_{12}\sigma_x + a_{22}\sigma_y + a_{23}\sigma_z, \\ \varepsilon_z &= a_{13}\sigma_x + a_{23}\sigma_y + a_{33}\sigma_z, \\ \gamma_{yz} &= a_{44}\tau_{yz}, \quad \gamma_{xz} = a_{55}\tau_{xz}, \quad \gamma_{xy} = a_{66}\tau_{xy}; \end{aligned}\right\} \qquad (4$$

$$\left.\begin{matrix} a_{11} & a_{12} & a_{13} & 0 & 0 & 0 \\ & a_{22} & a_{23} & 0 & 0 & 0 \\ & & a_{33} & 0 & 0 & 0 \\ & & & a_{44} & 0 & 0 \\ & & & & a_{55} & 0 \\ & & & & & a_{66} \end{matrix}\right\} \qquad (4.$$

We introduce the engineering constants E_i, G_{ij}, ν_{ij} usir numeral subscripts instead of the letter ones. Equatior (4.4) are then written as

$$\left.\begin{aligned} \varepsilon_x &= \frac{1}{E_1}\sigma_x - \frac{\nu_{21}}{E_2}\sigma_y - \frac{\nu_{31}}{E_3}\sigma_z, \\ \varepsilon_y &= -\frac{\nu_{12}}{E_1}\sigma_x + \frac{1}{E_2}\sigma_y - \frac{\nu_{32}}{E_3}\sigma_z, \\ \varepsilon_z &= -\frac{\nu_{13}}{E_1}\sigma_x - \frac{\nu_{23}}{E_2}\sigma_y + \frac{1}{E_3}\sigma_z, \\ \gamma_{yz} &= \frac{1}{G_{23}}\tau_{yz}, \quad \gamma_{xz} = \frac{1}{G_{13}}\tau_{xz}, \quad \gamma_{xy} = \frac{1}{G_{12}}\tau_{xy}. \end{aligned}\right\} \qquad (4.$$

A body having three orthogonal planes of elastic symmetr at each point (or, what is the same thing, three mutuall perpendicular principal directions) is said to be orthogonall anisotropic, or, more shortly, orthotropic. The principa directions at a given point may not be equivalent. Of th twelve elastic constants entering into Eqs. (4.6) only nin

are independent since, by virtue of the symmetry of the matrix of the right-hand sides of the equations expressing the generalized Hooke's law, we always have

$$E_1\nu_{21} = E_2\nu_{12}, \quad E_2\nu_{32} = E_3\nu_{23}, \quad E_3\nu_{13} = E_1\nu_{31}. \tag{4.7}$$

The co-ordinate axes normal to the planes of elastic symmetry are called the principal co-ordinate axes.

It is important to note that no further reduction of the number of elastic constants is possible here since, in contrast to the case of a single plane of elastic symmetry, a_{ij} from Eqs. (4.4) or E_i, G_{ij}, ν_{ij} from Eqs. (4.6) are invariant constants themselves. They are alternatively called the principal constants (in distinction to the constants from the equations written for an arbitrary system x, y, z). Note that the element represented in Fig. 2 with faces parallel to the planes of elastic symmetry, when extended, remains a rectangular parallelepiped, but changes its dimensions.

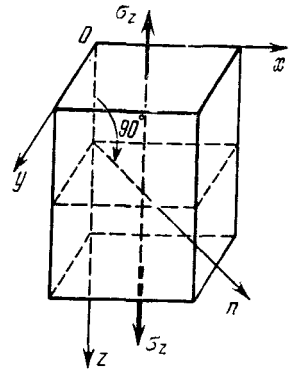

Fig. 2

(3) *Plane of isotropy (axis of rotational symmetry). Transversely isotropic body.* Consider a body possessing the following properties: through all points there pass parallel planes of elastic symmetry in which all directions are elastically equivalent (planes of isotropy). In other words, at each point there is one principal direction and an infinite number of principal directions in a plane normal to the first direction. Such a body may also be regarded as a body through each point of which there passes an axis of elastic symmetry of infinitely high order, i.e., a rotational axis. A body with such properties is said to be transversely isotropic ([29], p. 160).

Let the z axis be taken normal to a plane of isotropy, with the x and y axes directed arbitrarily in this plane. The

generalized Hooke's law equations are then written as

$$\left.\begin{aligned}
\varepsilon_x &= a_{11}\sigma_x + a_{12}\sigma_y + a_{13}\sigma_z,\\
\varepsilon_y &= a_{12}\sigma_x + a_{11}\sigma_y + a_{13}\sigma_z,\\
\varepsilon_z &= a_{13}(\sigma_x + \sigma_y) + a_{33}\sigma_z,\\
\gamma_{yz} &= a_{44}\tau_{yz}, \quad \gamma_{xz} = a_{44}\tau_{xz}, \quad \gamma_{xy} = 2(a_{11} - a_{12})\tau_{xy}.
\end{aligned}\right\} \quad (4.8)$$

The number of independent elastic constants is five.

We introduce the engineering constants: E, E' = Young's moduli for tension or compression in the plane of isotropy and in a direction normal to it, ν = Poisson's ratio characterizing transverse contraction in the plane of isotropy when tension is applied in this plane, ν' = the same when tension is applied in a direction normal to the plane of isotropy, $G = E/2(1+\nu)$, G' = shear moduli for the plane of isotropy and any plane perpendicular to it. Equations (4.8) are rewritten as*

$$\left.\begin{aligned}
\varepsilon_x &= \frac{1}{E}(\sigma_x - \nu\sigma_y) - \frac{\nu'}{E'}\sigma_z, \quad \gamma_{yz} = \frac{1}{G'}\tau_{yz},\\
\varepsilon_y &= \frac{1}{E}(-\nu\sigma_x + \sigma_y) - \frac{\nu'}{E'}\sigma_z, \quad \gamma_{xz} = \frac{1}{G'}\tau_{xz},\\
\varepsilon_z &= -\frac{\nu'}{E'}(\sigma_x + \sigma_y) + \frac{1}{E'}\sigma_z, \quad \gamma_{xy} = \frac{1}{G}\tau_{xy}.
\end{aligned}\right\} \quad (4.9)$$

In some works a transversely isotropic material is called *transtropic* for short (see, for example, [6]).

(4) *Isotropic body.* If all directions in a body are elastically equivalent and principal, then, putting $E' = E$, $\nu' = \nu$, $G' = G = E/2(1+\nu)$ in (4.9), we obtain the well known equations expressing the generalized Hooke's law for an isotropic body of Young's modulus E, Poisson's ratio ν, and shear modulus G, namely

$$\left.\begin{aligned}
\varepsilon_x &= \frac{1}{E}[\sigma_x - \nu(\sigma_y + \sigma_z)], \quad \gamma_{yz} = \frac{1}{G}\tau_{yz},\\
\varepsilon_y &= \frac{1}{E}[\sigma_y - \nu(\sigma_x + \sigma_z)], \quad \gamma_{xz} = \frac{1}{G}\tau_{xz},\\
\varepsilon_z &= \frac{1}{E}[\sigma_z - \nu(\sigma_x + \sigma_y)], \quad \gamma_{xy} = \frac{1}{G}\tau_{xy}.
\end{aligned}\right\} \quad (4.10)$$

* In [86] and [28] the generalized Hooke's law equations for a transversely isotropic body are given in an alternative, equivalent, form

Besides the four basic cases of elastic symmetry there is a number of others. Typical kinds of symmetry here are those of single crystals of various elements and compounds. It has been proved that there are altogether 32 kinds of geometrical crystal symmetry. However, the number of classes of elastic crystal symmetry is much fewer (nine) since the same form of the generalized Hooke's law equations for crystals applies to several cases of their geometrical symmetry. We shall not elaborate here upon results of investigations of this subject, but refer the interested reader to Love's book [29] (Chap. VI) and the author's book [26] (Sec. 4), where there are references to literature.

5. Transformation of Elastic Constants to a New Co-ordinate System

In solving a specific elasticity problem we have to use the generalized Hooke's law equations, which involve the elastic constants a_{ij} or A_{ij}. In the case of an anisotropic body these quantities depend on the directions of the axes of a co-ordinate system, and if the directions of the axes change, so do the values of the elastic constants. An exception is an isotropic body for which the generalized Hooke's law equations retain the same form in any orthogonal co-ordinate system, and the corresponding elastic constants remain unchanged (invariant). In studying a state of stress the following question often arises: the constants a_{ij} and A_{ij} are known for a co-ordinate system x, y, z, but it is more convenient to use another orthogonal system, x', y', z' (Fig. 3). It is required to find the constants a'_{ij}, A'_{ij} for the second system. To begin with, we must assign a table of the cosines of the angles between the new and old directions of the co-ordinate axes (see Table 1).

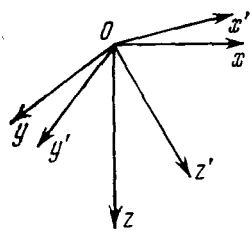

Fig. 3

We apply the following method. Consider the expressions for the elastic potential in the first ("old") and second ("new")

systems, and equate them. We obtain an equality whose left-hand side involves the components of stress or strain referred to the x, y, z system, and the right-hand side involves the same quantities for the x', y', z' system. We next express the components of stress or strain referred to the old co-ordinate system in terms of the components of stress or strain, respectively, for the new system.

On comparing the coefficients of the squares and products of the components of stress or strain referred to the new system on the left-hand and right-hand sides of the equality, we obtain the required formulas for the new elastic constants, namely the expressions for a'_{ij} in terms of a_{ij} or for A'_{ij} in terms of A_{ij}.

Let a_{ij} be the strain coefficients in the generalized Hooke's law equations for the x, y, z system, and let it be required to determine a'_{ij} for an orthogonal co-ordinate system x', y', z'. In the general case when no elements of elastic symmetry are present, the generalized Hooke's law equations referred to the old system are of the form of (3.8), and the elastic potential is determined by formula (3.13). For the x', y', z' co-ordinate system, we have the following equations and expression for $\overline{V}$:*

$$\left.\begin{aligned} \varepsilon'_x &= a'_{11}\sigma'_x + a'_{12}\sigma'_y + \ldots + a'_{16}\tau'_{xy}, \\ &\ldots\ldots\ldots\ldots\ldots\ldots \\ \gamma'_{yz} &= a'_{14}\sigma'_x + a'_{24}\sigma'_y + \ldots + a'_{46}\tau'_{xy}, \\ &\ldots\ldots\ldots\ldots\ldots\ldots \end{aligned}\right\} \tag{5.1}$$

$$\begin{aligned} \overline{V} = \frac{1}{2}a'_{11}\sigma'^2_x + a'_{12}\sigma'_x\sigma'_y + \ldots + a'_{16}\sigma'_x\tau'_{xy} + \\ + \frac{1}{2}a'_{22}\sigma'^2_y + \ldots + a'_{26}\sigma'_y\tau'_{xy} + \ldots \\ \ldots + \frac{1}{2}a'_{66}\tau'^2_{xy}. \end{aligned} \tag{5.2}$$

By equating the two expressions for $\overline{V}$, we obtain the equality

$$\begin{aligned} \frac{1}{2}a_{11}\sigma^2_x + a_{12}\sigma_x\sigma_y + \ldots + \frac{1}{2}a_{66}\tau^2_{xy} = \\ = \frac{1}{2}a'_{11}\sigma'^2_x + a'_{12}\sigma'_x\sigma'_y + \ldots + \frac{1}{2}a'_{66}\tau'^2_{xy}. \end{aligned} \tag{5.3}$$

* Of the generalized Hooke's law equations we write down just two, omitting a number of terms; in the expression for $\overline{V}$ we also leave out some terms [cf. (3.8) and (3.10)].

Substituting the expression for σ, τ in terms of σ', τ' on the left-hand side [formulas (2.3) are written in abridged form], we obtain

$$\left.\begin{aligned} &\sigma_x = \sigma'_x l_{11}^2 + \sigma'_y l_{21}^2 + \ldots + 2\tau'_{xy} l_{11} l_{21}, \\ &\ldots\ldots\ldots\ldots\ldots\ldots\ldots\ldots \\ &\tau_{yz} = \sigma'_x l_{12} l_{13} + \sigma'_y l_{22} l_{23} + \ldots + \tau'_{xy}(l_{12} l_{23} + l_{22} l_{13}), \\ &\ldots\ldots\ldots\ldots\ldots\ldots\ldots\ldots \end{aligned}\right\} \quad (5.4)$$

By equating the coefficients of the squares and products of the primed stresses, we obtain the required transformation formulas. The equalities contain a'_{ij} as linear functions of a_{ij} and fourth-degree homogeneous functions in the cosines l_{ij}. The formulas, when written out in full, are rather unwieldy, but they may be written very compactly by introducing abbreviations q_{ij} defined by Table 3.

The first subscript in the symbols q_{ij} indicates a line number in Table 3, and the second subscript a column number.*

$$q_{11} = l_{11}^2, \quad q_{43} = 2l_{33}l_{23}, \quad q_{56} = l_{31}l_{12} + l_{32}l_{11}.$$

With the help of these expressions dependent on l_{ij} all transformation formulas may be written as a single one:

$$a'_{ij} = \sum_{m=1}^{6} \sum_{n=1}^{6} a_{mn} q_{im} q_{jn}, \quad (5.5)$$

or, omitting the summation signs, as

$$a'_{ij} = a_{mn} q_{im} q_{jn} \quad (5.6)$$

($i, j = 1, 2, \ldots, 6$; the indices m and n are to be summed). It is also easy to write formulas for the transformation of the elastic moduli A_{ij} to new axes, which are obtained by using the expression for $\overline{V}$ as a function of ε and γ. These formulas are given without derivation; they are all obtained from a single one:

$$A'_{ij} = A_{mn} q_{im} q_{jn}. \quad (5.7)$$

* In the first edition of this book [26] Table 2 corresponding to Table 3 is drawn up in a somewhat different way, which is virtually unimportant. Moreover, we find it more convenient to change the notation for the cosines.

Symbols q_{ij} in Transformation Formulas for a_{ij} Table 3

	1	2	3	4	5	6
1	l_{11}^2	l_{12}^2	l_{13}^2	$l_{12}l_{13}$	$l_{13}l_{11}$	$l_{12}l_{11}$
2	l_{21}^2	l_{22}^2	l_{23}^2	$l_{23}l_{22}$	$l_{23}l_{21}$	$l_{22}l_{21}$
3	l_{31}^2	l_{32}^2	l_{33}^2	$l_{33}l_{32}$	$l_{33}l_{31}$	$l_{32}l_{31}$
4	$2l_{31}l_{21}$	$2l_{32}l_{22}$	$2l_{33}l_{23}$	$l_{33}l_{22}+l_{32}l_{23}$	$l_{33}l_{21}+l_{31}l_{23}$	$l_{31}l_{22}+l_{32}l_{21}$
5	$2l_{31}l_{11}$	$2l_{32}l_{12}$	$2l_{33}l_{13}$	$l_{33}l_{12}+l_{32}l_{13}$	$l_{33}l_{11}+l_{31}l_{13}$	$l_{31}l_{12}+l_{32}l_{11}$
6	$2l_{21}l_{11}$	$2l_{12}l_{22}$	$2l_{13}l_{23}$	$l_{13}l_{22}+l_{12}l_{23}$	$l_{13}l_{21}+l_{11}l_{23}$	$l_{11}l_{22}+l_{12}l_{21}$

Here the symbols q_{ij} are taken from a table differing from Table 3 only in that the factor 2 appears in front o the products of the cosines l_{ij} in boxes at the intersection o lines 1, 2, 3 and columns 4, 5, 6, while at the intersection o lines 4, 5, 6 and columns 1, 2, 3 the products of the cosine are entered without the factor 2 (see [31], pp. 82 and 83)

Formulas (5.6), (5.7) and Table 3 enable one to determin Young's modulus for any direction n if the elastic constant a_{ij} are known for a given fixed co-ordinate system x, y, z We write out in full the expression for the constant a'_{11} reciprocal to the modulus E_n:

$$a'_{11}=\frac{1}{E_n}=a_{11}l_{11}^4+a_{22}l_{12}^4+a_{33}l_{13}^4+$$
$$+(2a_{23}+a_{44})\,l_{12}^2l_{13}^2+(2a_{13}+a_{55})\,l_{13}^2l_{11}^2+(2a_{12}+a_{66})\,l_{11}^2l_{12}^2+$$
$$+2l_{12}l_{13}\,[(a_{14}+a_{56})\,l_{11}^2+a_{21}l_{12}^2+a_{31}l_{13}^2]+$$
$$+2l_{13}l_{11}\,[a_{15}l_{11}^2+(a_{25}+a_{46})\,l_{12}^2+a_{33}l_{13}^2]+$$
$$+2l_{11}l_{12}\,[a_{16}l_{11}^2+a_{26}l_{12}^2+(a_{34}+a_{45})\,l_{13}^2]. \qquad (5.8)$$

Here

$$x'=n,\ l_{11}=\cos(n,\ x),\ l_{12}=\cos(n,\ y),\ l_{13}=\cos(n,\ z).$$

The formulas for the transformation of the strain coefficients may be written in a different way if these coefficients are denoted by the letter a with four subscripts and not with two, and if we use the shorthand form of writing the generalized Hooke's law equations. We present these formulas, all contained in a single one, without derivation; they are taken from the book repeatedly cited above ([31], p. 71).

$$a'_{ijkl} = a_{mnsp} l_{im} l_{jn} l_{ks} l_{lp}. \tag{5.9}$$

For given i, j, k, l, the indices m, n, s, p are to be summed from 1 to 3. Formula (5.9) transforms the components of a tensor of rank four to new axes; consequently, the constants a_{ijkl} constitute a tensor of rank four (or, what is the same thing, they are its components).* Of course, the transformation formulas (5.9) are not at variance but in full accord with the foregoing transformation formulas (5.5), (5.6).

The transformation of the strain coefficients to new axes reveals a number of invariant relations among a_{ijkl}. This question is discussed in [6].

6. Transformation of Elastic Constants When the Co-ordinate System is Rotated

Consider a special case when a new co-ordinate system x', y', z' is obtained from the old system x, y, z by rotation through a certain angle φ about the common axis $z = z'$ (Fig. 4). All formulas for the transformation of the elastic constants will involve the cosines l_{ij}, which in this case are given by Table 4.

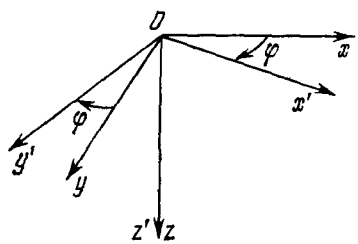

Fig. 4

(1) *Transformation of the strain coefficients* a_{ij}. Let a body possess anisotropy of the general kind (21 or, more precisely, 18 invariant elastic constants). As before, let a_{ij} denote the elastic constants referred to the old co-ordinate

* A. L. Rabinovich proposed a different interpretation of the strain coefficients in [108], namely that a_{ij} should be regarded as the components of a symmetrical tensor of rank two in six-dimensional space.

Cosines **Table 4**

	x	y	z
x'	$\cos\varphi$	$\sin\varphi$	0
y'	$-\sin\varphi$	$\cos\varphi$	0
z'	0	0	1

system x, y, z, and let a'_{ij} denote the constants referred to a new, rotated, system x', y', z'. The formulas for a'_{ij} are obtained as special cases of (5.5), (5.6), but in the present case the symbols q_{ij} must be taken from Table 5, which is obtained from Table 3 by substituting the values of the cosines l_{ij} (see [31], p. 84).

It will be recalled that q_{ij} denotes the number or expression located at the intersection of the ith line and the jth column in Table 5.

Below we give complete expressions (without any omissions) for the elastic constants obtained by formula (5.5) using the data of Table 5:

$$\left.\begin{aligned}
a'_{11} &= a_{11}\cos^4\varphi + (2a_{12} + a_{66})\sin^2\varphi\cos^2\varphi + \\
&\quad + a_{22}\sin^4\varphi + 2(a_{16}\cos^2\varphi + a_{26}\sin^2\varphi)\sin\varphi\cos\varphi, \\
a'_{22} &= a_{11}\sin^4\varphi + (2a_{12} + a_{66})\sin^2\varphi\cos^2\varphi + \\
&\quad + a_{22}\cos^4\varphi - 2(a_{16}\sin^2\varphi + a_{26}\cos^2\varphi)\sin\varphi\cos\varphi, \\
a'_{12} &= (a_{11} + a_{22} - 2a_{12} - a_{66})\sin^2\varphi\cos^2\varphi + a_{12} + \\
&\quad + (a_{16} - a_{26})(\cos^2\varphi - \sin^2\varphi)\sin\varphi\cos\varphi, \\
a'_{66} &= 4(a_{11} + a_{22} - 2a_{12} - a_{66})\sin^2\varphi\cos^2\varphi + a_{66} - \\
&\quad - 4(a_{16} - a_{26})(\cos^2\varphi - \sin^2\varphi)\sin\varphi\cos\varphi, \\
a'_{16} &= [2a_{22}\sin^2\varphi - 2a_{11}\cos^2\varphi + \\
&\quad + (2a_{12} + a_{66})(\cos^2\varphi - \sin^2\varphi)]\sin\varphi\cos\varphi + \\
&\quad + a_{16}\cos^2\varphi(\cos^2\varphi - 3\sin^2\varphi) + \\
&\quad + a_{26}\sin^2\varphi(3\cos^2\varphi - \sin^2\varphi),
\end{aligned}\right\} \quad (6.1)$$

$$
\left.\begin{aligned}
a'_{26} = {} & [2a_{22}\cos^2\varphi - 2a_{11}\sin^2\varphi - \\
& - (2a_{12} + a_{66})(\cos^2\varphi - \sin^2\varphi)]\sin\varphi\cos\varphi + \\
& + a_{16}\sin^2\varphi\,(3\cos^2\varphi - \sin^2\varphi) + \\
& + a_{26}\cos^2\varphi\,(\cos^2\varphi - 3\sin^2\varphi);
\end{aligned}\right|
$$

$$
\left.\begin{aligned}
a'_{44} &= a_{44}\cos^2\varphi - 2a_{45}\sin\varphi\cos\varphi + a_{55}\sin^2\varphi, \\
a'_{45} &= (a_{44} - a_{55})\sin\varphi\cos\varphi + a_{45}(\cos^2\varphi - \sin^2\varphi), \\
a'_{55} &= a_{44}\sin^2\varphi + 2a_{45}\sin\varphi\cos\varphi + a_{55}\cos^2\varphi;
\end{aligned}\right\} \quad (6.2)
$$

$$
\left.\begin{aligned}
a'_{14} &= a_{14}\cos^3\varphi + (a_{46} - a_{15})\sin\varphi\cos^2\varphi + \\
& \qquad + (a_{24} - a_{56})\sin^2\varphi\cos\varphi - a_{25}\sin^3\varphi, \\
a'_{24} &= a_{24}\cos^3\varphi - (a_{46} + a_{25})\sin\varphi\cos^2\varphi + \\
& \qquad + (a_{14} + a_{56})\sin^2\varphi\cos\varphi - a_{15}\sin^3\varphi, \\
a'_{46} &= a_{46}\cos^3\varphi + (-2a_{14} + 2a_{24} - a_{56})\sin\varphi\cos^2\varphi + \\
& \qquad + (2a_{15} - 2a_{25} - a_{46})\sin^2\varphi\cos\varphi + a_{56}\sin^3\varphi, \\
a'_{15} &= a_{15}\cos^3\varphi + (a_{14} + a_{56})\sin\varphi\cos^2\varphi + \\
& \qquad + (a_{25} + a_{46})\sin^2\varphi\cos\varphi + a_{24}\sin^3\varphi, \\
a'_{25} &= a_{25}\cos^3\varphi + (a_{24} - a_{56})\sin\varphi\cos^2\varphi + \\
& \qquad + (a_{15} - a_{46})\sin^2\varphi\cos\varphi + a_{14}\sin^3\varphi, \\
a'_{56} &= a_{56}\cos^3\varphi + (-2a_{15} + 2a_{25} + a_{46})\sin\varphi\cos^2\varphi + \\
& \qquad + (-2a_{14} + 2a_{24} - a_{56})\sin^2\varphi\cos\varphi - a_{46}\sin^3\varphi;
\end{aligned}\right\} \quad (6.3)
$$

$$
\left.\begin{aligned}
a'_{13} &= a_{13}\cos^2\varphi + a_{36}\sin\varphi\cos\varphi + a_{23}\sin^2\varphi, \\
a'_{36} &= 2(a_{23} - a_{13})\sin\varphi\cos\varphi + a_{36}(\cos^2\varphi - \sin^2\varphi), \\
a'_{23} &= a_{13}\sin^2\varphi - a_{36}\sin\varphi\cos\varphi + a_{23}\cos^2\varphi, \\
a'_{33} &= a_{33}, \\
a'_{34} &= a_{34}\cos\varphi - a_{35}\sin\varphi, \\
a'_{35} &= a_{34}\sin\varphi + a_{35}\cos\varphi.
\end{aligned}\right\} \quad (6.4)
$$

If a body is orthotropic and if the old axes x, y, z are the principal axes of elasticity, i.e., they are normal to the planes of elastic symmetry, then in the formulas for the

Symbols q_{ij} in Transformation Formulas for a_{ij} Table 5

i \ j	1	2	3	4	5	6
1	$\cos^2\varphi$	$\sin^2\varphi$	0	0	0	$\sin\varphi\cos\varphi$
2	$\sin^2\varphi$	$\cos^2\varphi$	0	0	0	$-\sin\varphi\cos\varphi$
3	0	0	1	0	0	0
4	0	0	0	$\cos\varphi$	$-\sin\varphi$	0
5	0	0	0	$\sin\varphi$	$\cos\varphi$	0
6	$-2\sin\varphi\cos\varphi$	$2\sin\varphi\cos\varphi$	0	0	0	$\cos^2\varphi-\sin^2\varphi$

transformation of the elastic constants (6.1) to (6.4) we must put

$$a_{14} = a_{15} = a_{16} = a_{24} = a_{25} = a_{26} = a_{34} = a_{35} = a_{36} = \\ = a_{45} = a_{46} = a_{56} = 0.$$

Clearly,

$$a'_{14} = a'_{24} = a'_{46} = a'_{15} = a'_{25} = a'_{56} = a'_{34} = a'_{35} = 0, \qquad (6.5)$$

but a'_{16}, a'_{26}, a'_{36}, a'_{45} are not, in general, zero.

In practice the following question may arise. Suppose we have some reasons to consider a body as orthotropic, but we know only the direction of one principal axis, taken as the z axis of a co-ordinate system x, y, z, and the elastic constants a_{ij} for this system. We now ask the question: how can one determine the directions of the other two planes of elastic symmetry, or, what is the same thing, angle φ that the principal x' axis makes with the x axis? The answer to this question follows directly from formulas (6.1), (6.2),

and (6.4): the angle φ is found as the numerically smallest solution of four equations:

$$a'_{16}(\varphi) = a'_{26}(\varphi) = 0, \tag{6.6}$$

$$a'_{36}(\varphi) = a'_{45}(\varphi) = 0. \tag{6.7}$$

After simple manipulation Eqs. (6.6) become

$$\tan 4\varphi = 2\,\frac{a_{16}-a_{26}}{a_{11}+a_{22}-2a_{12}-a_{66}}, \qquad \tan 2\varphi = \frac{a_{16}+a_{26}}{a_{11}-a_{22}}, \tag{6.8}$$

and the condition for the existence of common (i.e., identical) solutions for them is written as

$$(a_{16}-a_{26})\,[(a_{11}-a_{22})^2-(a_{16}+a_{26})^2] = (a_{16}+a_{26}) \times \\ \times (a_{11}-a_{12})\,(a_{11}+a_{22}-2a_{12}-a_{66}). \tag{6.9}$$

Moreover, the angle φ must satisfy Eqs. (6.7) or

$$\tan 2\varphi = \frac{a_{36}}{a_{13}-a_{23}}, \qquad \tan 2\varphi = \frac{2a_{45}}{a_{55}-a_{44}}, \tag{6.10}$$

and hence we must have

$$\frac{a_{16}+a_{26}}{a_{11}-a_{22}} = \frac{a_{36}}{a_{13}-a_{23}} = \frac{2a_{45}}{a_{55}-a_{44}}. \tag{6.11}$$

If any one of conditions (6.9) and (6.11) is not fulfilled, this means that the body is not orthotropic.

It is important to note that in studying the *plane problem*, which will be discussed in detail in Chap. 4, Eqs. (6.10) may be disregarded simply because the equations and formulas do not involve a_{36} and a_{45}. Equations (6.8) will determine the positions of the axes x', y', which, though not being, strictly speaking, principal (a'_{36} and a'_{45} are not zero), can be treated as principal in the plane problem since in the x', y', z' system the equations for the plane problem are no different from those for an orthotropic body.

Consider an elementary example. Suppose, for a given co-ordinate system x, y, z, that

$$a_{11} = a_{22}, \quad a_{13} = a_{23}, \quad a_{44} = a_{55}, \quad a_{16} = a_{26} \neq 0, \\ a_{36} > 0, \quad a_{45} < 0.$$

The four equations (6.8) and (6.10) then become

$$\tan 4\varphi = 0, \quad \tan 2\varphi = \infty. \tag{6.12}$$

From the first equation we find $\varphi = 0, \frac{\pi}{4}, \frac{\pi}{2}, \frac{3\pi}{4}, \ldots$ and from the second $\varphi = \frac{\pi}{4}, \frac{3\pi}{4}, \ldots$. The numerically smallest φ satisfying both equations is $\varphi = \pi/4$. The body is orthotropic; two planes of elastic symmetry are inclined to the co-ordinate planes at angles of 45° and 135°.

The formulas for the elastic constants of an orthotropic body become more vivid if the engineering elastic constants E_i, G_{ij}, ν_{ij} are introduced. Instead of (6.1), (6.2), and (6.4) we then have

$$\left.\begin{aligned}
a'_{11} &= \frac{\cos^4\varphi}{E_1} + \left(\frac{1}{G_{12}} - \frac{2\nu_{12}}{E_1}\right)\sin^2\varphi\cos^2\varphi + \frac{\sin^4\varphi}{E_2},\\
a'_{22} &= \frac{\sin^4\varphi}{E_1} + \left(\frac{1}{G_{12}} - \frac{2\nu_{12}}{E_1}\right)\sin^2\varphi\cos^2\varphi + \frac{\cos^4\varphi}{E_2},\\
a'_{12} &= \left(\frac{1}{E_1} + \frac{1}{E_2} + \frac{2\nu_{12}}{E_1} - \frac{1}{G_{12}}\right)\sin^2\varphi\cos^2\varphi - \\
&\qquad - \frac{\nu_{12}}{E_1},\\
a'_{66} &= 4\left(\frac{1}{E_1} + \frac{1}{E_2} + \frac{2\nu_{12}}{E_1} - \frac{1}{G_{12}}\right)\sin^2\varphi\cos^2\varphi + \\
&\qquad + \frac{1}{G_{12}},\\
a'_{16} &= \left[2\left(\frac{\sin^2\varphi}{E_2} - \frac{\cos^2\varphi}{E_1}\right) + \left(\frac{1}{G_{12}} - \frac{2\nu_{12}}{E_1}\right)\times\right.\\
&\qquad \left.\times(\cos^2\varphi - \sin^2\varphi)\right]\sin\varphi\cos\varphi,\\
a'_{26} &= \left[2\left(\frac{\cos^2\varphi}{E_2} - \frac{\sin^2\varphi}{E_1}\right) - \left(\frac{1}{G_{12}} - \frac{2\nu_{12}}{E_1}\right)\times\right.\\
&\qquad \left.\times(\cos^2\varphi - \sin^2\varphi)\right]\sin\varphi\cos\varphi;
\end{aligned}\right\} \tag{6.13}$$

$$\left.\begin{aligned}
a'_{44} &= \frac{\cos^2\varphi}{G_{23}} + \frac{\sin^2\varphi}{G_{13}},\\
a'_{45} &= \left(\frac{1}{G_{23}} - \frac{1}{G_{13}}\right)\sin\varphi\cos\varphi,\\
a'_{55} &= \frac{\sin^2\varphi}{G_{23}} + \frac{\cos^2\varphi}{G_{13}};
\end{aligned}\right\} \tag{6.14}$$

$$\left.\begin{aligned} a'_{13} &= -\left(\frac{\nu_{23}}{E_2}\sin^2\varphi + \frac{\nu_{13}}{E_1}\cos^2\varphi\right), \\ a'_{23} &= -\left(\frac{\nu_{23}}{E_2}\cos^2\varphi + \frac{\nu_{13}}{E_1}\sin^2\varphi\right), \\ a'_{33} &= \frac{1}{E_3}, \\ a'_{36} &= 2\left(\frac{\nu_{13}}{E_1} - \frac{\nu_{23}}{E_2}\right)\sin\varphi\cos\varphi. \end{aligned}\right\} \tag{6.15}$$

The other a'_{ij} are zero.

Below are given some invariants for an orthotropic body, i.e., quantities that are unaltered when the co-ordinate system is rotated about the common axis z:

$$\left.\begin{aligned} I_1 &= a'_{11} + a'_{22} + 2a'_{12} = \frac{1}{E_1} + \frac{1}{E_2} - \frac{2\nu_{12}}{E_1}, \\ I_2 &= a'_{66} - 4a'_{12} = \frac{1}{G_{12}} + \frac{4\nu_{12}}{E_1}, \\ I_3 &= a'_{44} + a'_{55} = \frac{1}{G_{13}} + \frac{1}{G_{23}}, \\ I_4 &= a'_{13} + a'_{23} = -\left(\frac{\nu_{13}}{E_1} + \frac{\nu_{23}}{E_2}\right) = -\frac{\nu_{31} + \nu_{32}}{E_3}. \end{aligned}\right\} \tag{6.16}$$

The questions associated with the transformation of the elastic constants of an orthotropic body when the co-ordinate axes are rotated have been studied by N. G. Chentsov; formulas (6.3) and (6.4) have been derived in his work [61] (the notation used by N. G. Chentsov is somewhat different from that adopted here). The same questions are treated in the handbook [6] and in the book [7].

(2) *Transformation of reduced elastic constants* β_{ij}. As will be shown later, in studying the elastic equilibrium of an anisotropic body bounded by a cylindrical surface we have to deal mostly, not with the constants a_{ij}, but with their non-linear combinations:

$$\beta_{ij} = a_{ij} - \frac{a_{i3}a_{j3}}{a_{33}} \quad (i, j = 1, 2, 4, 5, 6). \tag{6.17}$$

These expressions have been termed the reduced elastic constants. In seeking solutions of various problems, the following question may arise: the reduced constants β_{ij} are

known for a certain co-ordinate system x, y, z with the z axis parallel to the generators of the cylindrical surface, and it is required to determine these constants for another system x', y', z' rotated with respect to the x, y, z system about the common axis $z' = z$ through an angle φ.

We state without derivation that the formulas for the transformation of the reduced constants are obtained from (6.1) to (6.3) if a_{ij} are replaced by β_{ij} with the same subscripts, and a'_{ij} by β'_{ij}. We thus obtain 15 formulas for the fifteen β'_{ij}; since they are obvious, we shall not write them out.*

If the old axes x, y, z are principal, then

$$\beta_{14} = \beta_{15} = \beta_{16} = \beta_{24} = \beta_{25} = \beta_{26} = \beta_{45} = \\ = \beta_{46} = \beta_{56} = 0$$

and in consequence

$$\beta'_{14} = \beta'_{24} = \beta'_{46} = \beta'_{15} = \beta'_{25} = \beta'_{56} = 0.$$

7. Transformation of Complex Parameters When the Co-ordinate System is Rotated

All problems considered in this book for a homogeneous body in Cartesian co-ordinates, except for the simplest ones, reduce to finding unknown functions $U(x, y)$ satisfying second-, fourth-, or sixth-order differential equations of the form

$$a_0 \frac{\partial^{2m} U}{\partial x^{2m}} + a_1 \frac{\partial^{2m} U}{\partial x^{2m-1}\,\partial y} + \ldots + a_{2m} \frac{\partial^{2m} U}{\partial y^{2m}} = f(x, y). \qquad (7.1)$$

Here $m = 1$, 2, or 3; a_0, a_1, . . ., a_{2m} are given constants depending on the elastic constants, and $f(x, y)$ is a given (usually continuous) function of the co-ordinates x. y.

Associated with Eq. (7.1) is the algebraic (characteristic) equation of degree $2m$:

$$a_{2m}\mu^{2m} + a_{2m-1}\mu^{2m-1} + \ldots + a_0 = 0. \qquad (7.2)$$

As will be shown in Chap. 3, for every perfectly elastic body the roots μ_k, $\bar{\mu}_k$ of this equation are complex or pure

* The formulas for the transformation of β_{ij} and their brief derivation may be found in the first edition of this book [26] (pp. 43-44)

imaginary numbers; they are called the complex parameters of anisotropic material.* In solving various problems we often have to transform from one co-ordinate system, x, y, z, where z is an axis normal to a plane of elastic symmetry, to another system, x', y', z', rotated through an angle φ about the common axis $z' = z$.

The complex parameters are changed under this transformation. It is required to find the transformation formulas for the complex parameters when the axes are rotated.

To solve this problem, we divide the left-hand side of Eq. (7.1) into $2m$ linear differential operators of the first order, i.e., we represent it as

$$D_1 D_2 \ldots D_m \overline{D}_1 \overline{D}_2 \ldots \overline{D}_m U = f(x, y), \tag{7.3}$$

where

$$D_k = \frac{\partial}{\partial y} - \mu_k \frac{\partial}{\partial x}, \quad \overline{D}_k = \frac{\partial}{\partial y} - \overline{\mu}_k \frac{\partial}{\partial x} \quad (k = 1, 2, \ldots, m). \tag{7.4}$$

On transforming from the x, y, z system to a new one, we obtain

$$x' = x \cos\varphi + y \sin\varphi, \quad y' = -x \sin\varphi + y \cos\varphi, \tag{7.5}$$

$$\left.\begin{aligned} \frac{\partial}{\partial y} &= \frac{\partial}{\partial y'} \cos\varphi + \frac{\partial}{\partial y'} \sin\varphi, \\ \frac{\partial}{\partial x} &= -\frac{\partial}{\partial y'} \sin\varphi + \frac{\partial}{\partial x'} \cos\varphi, \end{aligned}\right\} \tag{7.6}$$

Substituting these expressions in (7.3), we find

$$D'_1 D'_2 \ldots D'_m \overline{D}'_1 \overline{D}'_2 \ldots \overline{D}'_m U = f_1(x', y'), \tag{7.7}$$

where

$$\left.\begin{aligned} D'_k &= \frac{\partial}{\partial y'} - \frac{\mu_k \cos\varphi - \sin\varphi}{\cos\varphi + \mu_k \sin\varphi} \frac{\partial}{\partial x'} = \frac{\partial}{\partial y'} - \mu'_k \frac{\partial}{\partial x'}, \\ \overline{D}'_k &= \frac{\partial}{\partial y'} - \frac{\overline{\mu}_k \cos\varphi - \sin\varphi}{\cos\varphi + \overline{\mu}_k \sin\varphi} \frac{\partial}{\partial x'} = \frac{\partial}{\partial y'} - \overline{\mu}'_k \frac{\partial}{\partial x'}, \end{aligned}\right\} \tag{7.8}$$

* See [27], Sec. 10. A bar above the letter denotes, as usual, the complex conjugates.

and $f_1(x', y')$ is a given function of x' and y'. On comparing (7.8) and (7.4), we find the formulas for the complex parameters in the new co-ordinate system:

$$\mu_k' = \frac{\mu_k \cos\varphi - \sin\varphi}{\cos\varphi + \mu_k \sin\varphi}, \quad \bar{\mu}_k' = \frac{\bar{\mu}_k \cos\varphi - \sin\varphi}{\cos\varphi + \bar{\mu}_k \sin\varphi}. \tag{7.9}$$

An inspection of the transformation formulas (7.9) reveal the following:

(1) if the parameters μ_k, $\bar{\mu}_k$ are complex for one co-ordinate system, they remain complex or pure imaginary for any other system rotated through an angle φ about the common axis z; conversely, if for any material or co-ordinate system μ_k, $\bar{\mu}_k$ come out real, they remain so in any othe (Cartesian, rotated) co-ordinate system;

(2) if among the complex parameters there are equal one ($\mu_m = \mu_n$), the corresponding complex parameters μ_m', μ_n' are also equal;

(3) if one of the complex parameters is i or $-i$ ($i = \sqrt{-1}$ for any co-ordinate system, the corresponding paramete for any other system rotated with respect to the first one i respectively equal to i or $-i$ (the case of an isotropic body)

8. Surfaces and Curves Representing the Variation of Elastic Constants with Change in Direction

As has been shown, the elastic constants for a fixed poin depend on quantities characterizing a direction, viz. o l_{ij}, and in particular on φ. Various geometrical construc tions have been proposed which illustrate, in a vivid way the variation of a particular elastic constant for differen directions drawn through a point O. For any specific mate rial, several methods may be suggested for such construc tions. We shall discuss some basic methods without speci fying, for the present, a material for which the geometrica construction is performed, but focusing our attention on th way the corresponding geometrical images are constructed. Specific elastic constants and geometrical constructions fo them will be discussed later in this section.

(1) *Direction surfaces and curves.* As has been shown, the elastic constants transformed to new axes are homogeneou

polynomials of the fourth degree in the direction cosines. It is well to recall here that in the theory of stress the normal stress is a quadratic function of the direction cosines of the normal to a plane on which it acts. By using the normal stress formula, one can construct what is known as the Cauchy direction surface, which offers a means of assessing (at least to some degree) the variation of the normal stresses on planes passed through a given point.

In a similar way it is possible to construct surfaces characterizing the variation of Young's modulus E_n for different directions (see Saint-Venant's work [112]) and of other elastic constants. We lay off, along the n directions from an arbitrarily chosen point taken as the origin O of some fixed system x, y, z, segments whose lengths are related to the modulus by the equation

$$r = k\sqrt[4]{E_n}. \tag{8.1}$$

Here k is a scale factor, which may, for example, be taken equal to $1/\sqrt[4]{E_1}$, where E_1 is Young's modulus for the x direction.

We now turn to formula (5.8). By expressing the cosines l_{11}, l_{12}, l_{13} in terms of the co-ordinates by the formulas

$$l_{11} = \frac{x}{r}, \qquad l_{12} = \frac{y}{r}, \qquad l_{13} = \frac{z}{r} \tag{8.2}$$

and laying off, along different directions emanating from the origin, segments equal to

$$r = \sqrt[4]{E_n a_{11}} = \sqrt[4]{\frac{E_n}{E_1}}, \tag{8.3}$$

we conclude that the ends of the segments r describe a fourth-degree surface, which is called the direction surface for the constants a_{ij} or for Young's modulus. The equation of this surface is of the form

$$\begin{aligned} a_{11}x^4 + a_{22}y^4 + a_{33}z^4 + (2a_{23} + a_{44})\, y^2z^2 + \\ + (2a_{13} + a_{55})\, z^2x^2 + (2a_{12} + a_{66})\, x^2y^2 + \\ + 2yz\,[(a_{14} + a_{56})\, x^2 + \qquad a_{24}y^2 + a_{34}z^2] + \\ + 2zx\,[a_{15}x^2 \qquad + (a_{25} + a_{46})\, y^2 + a_{35}z^2] + \\ + 2xy\,[a_{16}x^2 \qquad + \qquad a_{26}y^2 + \\ + (a_{36} + a_{45})\, z^2] = a_{11}. \end{aligned} \tag{8.4}$$

The lines of intersection of this surface and the planes passing through the origin are called the direction curves for Young's modulus.* The equations are simplified if the body is orthotropic. By choosing the x, y, z axes normal to the planes of elastic symmetry, we obtain the equation of the direction surface:

$$\frac{x^4}{E_1}+\frac{y^4}{E_2}+\frac{z^4}{E_3}-2\left(\frac{\nu_{23}}{E_2}y^2z^2+\frac{\nu_{31}}{E_3}z^2x^2+\frac{\nu_{12}}{E_1}x^2y^2\right)+$$
$$+\frac{y^2z^2}{G_{23}}+\frac{z^2x^2}{G_{13}}+\frac{x^2y^2}{G_{12}}=\frac{1}{E_1}. \qquad (8.5)$$

The equation of the direction curve on the xy plane is of the form

$$\lambda x^4+2Bx^2y^2+y^4=\lambda, \qquad (8.6)$$

where

$$\lambda=\frac{E_2}{E_1}, \qquad B=\frac{E_2}{2G_{12}}-\nu_{21}. \qquad (8.6a)$$

Figure 5 shows the direction curves of Young's modulus for two values of the parameters: (a) $\lambda = 0.5$, $B = 10$ and

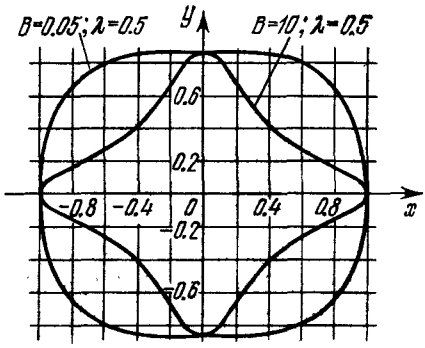

Fig. 5

(b) $\lambda = 0.5$, $B = 0.05$. In special cases the direction curves may degenerate into ellipses and circles. Several examples

* The names "direction surface" and "direction curve" for an elastic constant appear to have been first suggested by A. L. Rabinovich ([108], pp. 19-20).

are considered in Saint-Venant's work [112], but we shall not discuss them here.

(2) *Tension coefficient surfaces.* A visual representation of the resistance of material to tension and compression can be obtained by laying off, from a given point along different directions, segments whose lengths are proportional to the constant a'_{11}:

$$r = ka'_{11} \tag{8.7}$$

(or, what is the same thing, are inversely proportional to Young's modulus for the given direction). The ends of such segments describe a surface known as the "tension coefficient surface".

Figure 6 shows the general view of the tension coefficient surface for a material having symmetry as in a cubic crystal

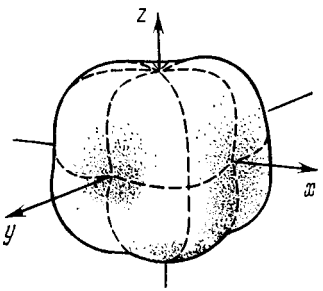

Fig. 6

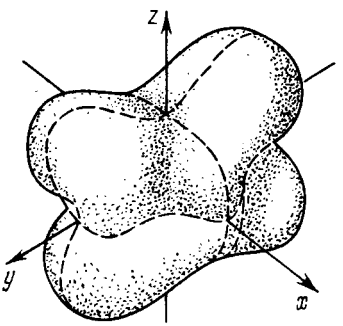

Fig. 7

($a_{11} = a_{22} = a_{33}$, $a_{23} = a_{13} = a_{12}$, $a_{44} = a_{55} = a_{66}$; the other $a_{ij} = 0$). The rotation of the figure through $\alpha = 2\pi/4 = 90°$ brings all its points in coincidence. Such a surface is, for example, obtained in an alpha-iron single crystal. The surface cuts off equal segments on the three axes of symmetry (principal axes of elasticity). Figure 7 shows the general appearance of the tension coefficient surface for an orthotropic material. The co-ordinate axes

are principal, i.e., they are normal to the planes of elastic symmetry.*

(3) *Anisotropy diagrams.* There are other methods available for the construction of surfaces characterizing the variation of elastic constants.

We shall consider the so-called anisotropy diagrams, which are three-dimensional figures, but can be sufficiently well represented on a plane. A Cartesian co-ordinate system is used for the construcion.

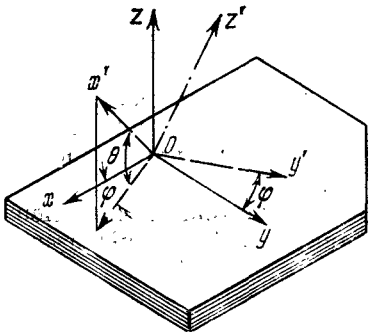

Fig. 8

The following procedure for construction has certain advantages over the others: let co-ordinate systems x, y, z and x', y', z' with a common origin O be taken so that the y and y' axes lie in the xy plane (basic plane; Fig. 8). The angle between the y' and y axes is taken as one co-ordinate, φ, and the angle between the x' axis and the xy plane as the other co-ordinate, θ. Thus, the elastic constant whose behaviour we are studying is represented as a function of two variables, φ (lying in the xy plane) and θ (in a plane perpendicular to xy). Next a three-dimensional co-ordinate network (the first octant) is taken; values of φ from 0 to 90° are laid off along the abscissa axis, angles θ along the ordinate axis, and absolute values of the elastic constant along the z axis. The values of the elastic constant are laid off from points with co-ordinates φ, θ along verticals, without distortion. Curves showing the variation of the constant are first plotted for $\varphi = \varphi_0 = 0$ and values of θ are taken at equal intervals (for example, at 15°, or at 5° for a more accurate plotting, etc.). Next curves are plotted for $\varphi = \varphi_1$ and θ varying from 0 to 90°. The construction is performed by using the means of modern computing tech-

* Figures 7 and 8 are taken from the first edition of this book [26], p. 52, where reference is also made to [108] and [47] as original sources.

nique, which we shall not consider here. When all curves have been plotted, they represent sections of a certain surface. The main convenience of this diagram lies in the fact that, though it represents a surface in oblique projection, the values of the elastic constant are plotted without distortion

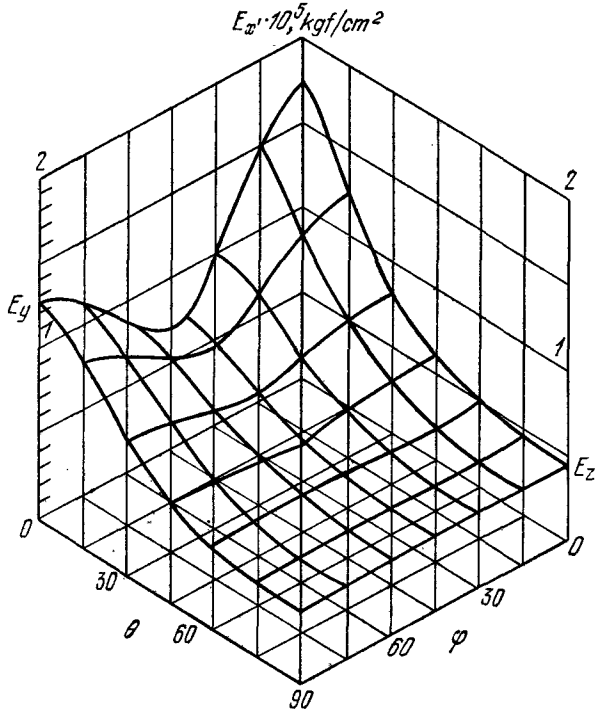

Fig. 9

along the vertical and can always be determined from the graph for any pair of angles φ and θ. Figure 9 shows a diagram for Young's modulus of one of the modern materials (glass-fibre reinforced plastics) taken from the book [7]. There are also other methods available for the plotting of anisotropy diagrams (surfaces), and in particular in polar co-ordinates. This subject is sufficiently well treated in [6] and [7].

9. Some Anisotropic Elastic Materials

Among real anisotropic bodies, the materials to be mentioned in the first place are single crystals of various substances, and also bars and plates cut out of single crystals.

It has been proved that there are altogether 32 kinds of geometrical symmetry of single crystals combined into seven syngonies named as follows: (1) triclinic, (2) monoclinic, (3) rhombic, (4) tetragonal, (5) trigonal, (6) hexagonal, and (7) cubic. Every natural crystal has one of the 32 kinds of symmetry, and may be placed into one of the seven syngonies [11]. As to the classes of *elastic* symmetry, they are much fewer in number since the same form of the generalized Hooke's law equations applies to several kinds of geometrical symmetry. According to the elastic properties, all crystals may be divided into only nine classes or groups. The expressions for the elastic potential (and hence for the generalized Hooke's law equations) for these nine classes may, for example, be found in Love's course [29] (Chap. VI, Article 109) and in a series of works cited below, and so, not being specially concerned with the elasticity of crystals, we leave them out. We only note that the elastic constants of crystalline substances (single crystals, minerals, and rocks) have been determined experimentally by many investigators. We must, in the first place, mention the classical investigations by Voigt described in his course in crystal physics [38]. Below are given the values found by Voigt for the elastic constants of quartz (rock crystal) forming crystals of trigonal syngony (12 non-zero constants a_{ij}, the z axis is directed along the axis of symmetry of the third order, the x axis along the axis of the second order):

$$\left.\begin{aligned}
&a_{11}=a_{22}=12.73\cdot10^{-7}, \quad a_{33}=9.71\cdot10^{-7},\\
&a_{12}=-3.67\cdot10^{-7}, \quad a_{13}=a_{23}=-1.49\cdot10^{-7},\\
&a_{44}=a_{55}=19.66\cdot10^{-7}, \quad a_{66}=2(a_{11}-a_{12}),\\
&a_{56}=a_{14}=-a_{24}=-4.23\cdot10^{-7},\\
&a_{15}=a_{25}=a_{35}=a_{45}=a_{16}=a_{26}=a_{36}=a_{46}=a_{34}=0\\
&\qquad\qquad\qquad\qquad\qquad\qquad\qquad\qquad\qquad\qquad\text{(in cm}^2\text{/kgf *)}.
\end{aligned}\right\} \quad (9.1)$$

* kgf is kilogram-force in distinction to kg for kilogram-mass.

The numerical values of the elastic constants for several single crystals and minerals are given in [47]. The literature on this subject is also indicated in [68]. In the review paper by K.S. Aleksandrov and T.V. Ryzhova [41] the elastic constants are given for more than two hundred substances forming crystals of various syngonies, a large list of references is appended, and some methods are presented for determining the elastic constants (see also [70]).

The elastic constants are also known for some rocks, and in particular for fine-grained and laminated rocks. Because of lamination, these rocks may be regarded, to a first approximation, as homogeneous and transversely isotropic. We give numerical values of the elastic constants for one of these rocks, viz. coarse dark-grey aleurolith. This is a laminated, tightly bound sedimentary rock containing from 60 to 70 per cent of fragments of quartz and feldspar. The binding material in amounts of 40 down to 30 per cent of the total composition is argillaceous, with admixed muscovite and calcite. The thickness of laminae is of the order of 1 to 4 mm.

By taking the z axis normal to the planes of laminae, which are regarded, to a first approximation, as planes of isotropy, we obtain the generalized Hooke's law equations (4.9) for this material. The following values have been found experimentally for Young's moduli, the shear moduli, and Poisson's ratios (see [86]):

$$\left.\begin{array}{l} E=6.21\cdot 10^5, \quad E'=5.68\cdot 10^5, \quad G'=2.29\cdot 10^5 \\ \qquad\qquad\qquad\qquad\qquad\qquad\qquad\qquad \text{(in kgf/cm}^2\text{)}; \\ G=2.55, \quad \nu=0.22, \quad \nu'=0.24 \end{array}\right\} \quad (9.2)$$

(the last three values are less accurate than the first three since they have been found by calculation and not experimentally).

In spite of marked difference between the elastic constants E and E', G and G', ν and ν', aleurolith should be considered low anisotropic since the parameters determining the degree of anisotropy in it are close to those for an isotropic body. For any specific shape of a body made of aleurolith and for particular forces, the stresses differ very little from those in an isotropic body of the same shape and loaded in the same

manner. The elastic constants for many anisotropic materials and rocks are given in the handbook [14].

In connection with the subject of the elastic properties of rocks the work [50] is of special interest. It contains the numerical values of all engineering elastic constants for forty seven different rocks, which may be regarded, to a first approximation, as transversely isotropic (aleuroliths, phyllites, shales, sandstones, limestones, granites, granodiorites, etc.). The numerical values of the constants are taken from the experimental investigations of several authors. The analysis of these data has suggested the following conclusion. Although the shear modulus G' for planes normal to the plane of isotropy is, strictly speaking, an independent constant and is in no way related to the other elastic constants, it is possible to indicate an approximate formula connecting G' with principal Young's moduli and Poisson's ratios for forty five rocks (out of 47). In our notation [see Eqs. (4.9)] this approximate formula is of the form

$$G' = \frac{EE'}{E(1+2\nu')+E'}. \tag{9.3}$$

In the case of an isotropic body it transforms into the exact formula for the shear modulus $G = E/2(1+\nu)$. Thus, for forty five of the rocks examined it is permissible to assume, with an accuracy sufficient for practical purposes, that the number of independent elastic constants is four and not five. As will be shown in Chap. 4, the degree (or intensity) of anisotropy in the case of a two-dimensional (plane) problem is characterized by two quantities. The anisotropy of the foregoing rocks, however, can be characterized by only one quantity, and the authors propose that this quantity should be taken as the ratio of the principal moduli $p = E/E'$.

Among non-crystalline anisotropic materials, we may mention wood of various species of tree with regular annual rings. Strictly speaking, wood is a non-homogeneous material, but if the curvature of rings and the non-homogeneity are neglected, a block of wood may be regarded, to a first approximation, as a homogeneous body. Three orthogonal planes of structural symmetry may be distinguished in it, and these are simultaneously planes of elastic symmetry:

the first plane, yz, is normal to the wood grain, the second (tangential) plane, xy, is parallel to the annual rings, and the third (radial) plane, xz, is orthogonal to the first two (Fig. 10). All planes parallel to yz, xz, and xy are also planes of elastic symmetry (of course, with sufficiently regular structure when there are no flaws, knots, or other defects of wood). The generalized Hooke's law equations referred to the above co-ordinate system are given by (4.4) and (4.6) and involve nine independent (and invariant) elastic constants.

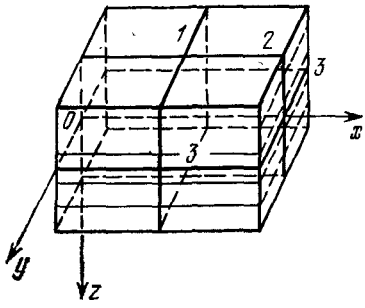

Fig. 10

A simplified model of wood is sometimes used, namely it is regarded as a transversely isotropic material, i.e., the difference in the elastic properties for different directions in planes normal to the grain is neglected.

Below are given values of some elastic constants and graphs for pine wood using [102] and [108] (E_1, E_2 are Young's moduli for tension and compression in directions parallel to the grain and in tangential directions, respectively):

$$\left.\begin{aligned} &E_1 = 1\cdot 10^5, \quad E_2 = 0.042\cdot 10^5,\\ &\nu_{21} = 0.01, \qquad \lambda = \frac{E_2}{E_1} = 0.042,\\ &G_{12} = 0.075\cdot 10^5 \text{ (in kgf/cm}^2\text{)};\\ &B = \frac{E_2}{2G_{12}} - \nu_{21} = 0.27. \end{aligned}\right\} \tag{9.4}$$

The values of E_1, E_2, ν_{21} have been obtained directly from experiment, and the shear modulus has been calculated by the formula for the transformation of elastic constants using experimental data. Figure 11 shows a curve of values of Young's modulus plotted against the compression direction, taken from [108], where there are also some other graphs for elastic constants. Figure 12 shows the direction curve for Young's modulus of pine.

In the repeatedly cited book [6] there are comprehensive tables of numerical values of all nine constants for wood of twelve different species of tree (pp. 54 to 57 and 60 to 79).

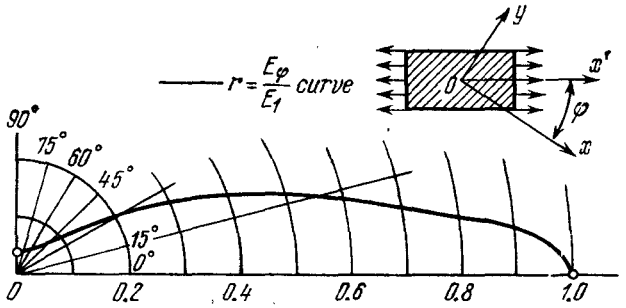

Fig. 11

Another example of an anisotropic material is plywood. A sheet of plywood is usually made of an odd number of wood (veneer) plies placed symmetrically with respect to the middle one and bonded over the surfaces of contact with

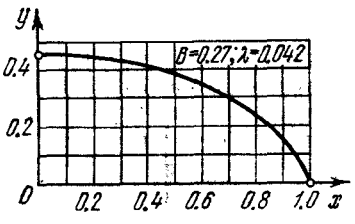

Fig. 12

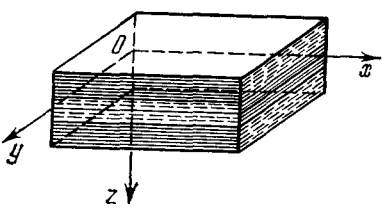

Fig. 13

a certain binder; in most grades of plywood the directions of fibres of adjacent plies are mutually perpendicular. A sheet of plywood is a non-homogeneous body, but, if the dimensions are great compared with the ply thickness, it may be regarded, to a first approximation, as a homogeneous and orthotropic plate, i.e., the non-homogeneity may be neglected. The planes of elastic symmetry are normal to the wood grain.

Let the state of stress in a plywood plate be generalized plane stress, i.e., one which is produced by forces acting in

its middle plane. We take the middle plane of the whole plywood sheet as the xy plane, with the x and y axes directed parallel and perpendicular to the fibres of the outer plies (see Fig. 13 showing an element of three-ply plywood). By introducing into consideration the average values (across the thickness) of the stress and strain components parallel to the middle plane, $\bar{\sigma}_x$, $\bar{\sigma}_y$, $\bar{\tau}_{xy}$, $\bar{\varepsilon}_x$, $\bar{\varepsilon}_y$, $\bar{\gamma}_{xy}$, and neglecting the average stress $\bar{\sigma}_z$, we write the three equations expressing the generalized Hooke's law as

$$\left.\begin{aligned} \bar{\varepsilon}_x &= \frac{1}{E_1}\bar{\sigma}_x - \frac{\nu_2}{E_2}\bar{\sigma}_y, \\ \bar{\varepsilon}_y &= -\frac{\nu_1}{E_1}\bar{\sigma}_x + \frac{1}{E_2}\bar{\sigma}_y, \\ \bar{\gamma}_{xy} &= \frac{1}{G}\bar{\tau}_{xy}. \end{aligned}\right\} \tag{9.5}$$

Here E_1, E_2, G, ν_1, ν_2 are the averaged engineering elastic constants for the plate as a whole (they depend on the elastic constants of the plies, their number and thicknesses).

Below are given numerical values of the elastic constants for four kinds of plywood.

(1) Three-ply birch plywood bonded with bakelite film. This plywood is a material with pronounced anisotropy, and one which is very suitable for illustrating theoretical investigations on the plane problem, in particular on the question of stress concentration around holes. It is on this material that we have illustrated nearly all our investigations; comparison between the stress graphs for a plate of birch plywood and for an isotropic plate shows in a particularly vivid way how the anisotropy affects the stress distribution. The values of elastic constants are given in the author's books [26] to [28]. In the present book, too, we shall investigate the stress distribution in plates with holes and give stress graphs for a plate of birch plywood and for a similar isotropic plate.

(2) БС-1 plywood, grade 1; seven veneer plies, the sheet thickness is 8 mm.

(3) БФС bakelite-bonded plywood; seven veneer plies, the sheet thickness is 7 mm.

(4) ФСФ plywood of increased water-resistance; the sheet thickness is 10 mm.

The elastic constants of plywood (2), (3), and (4) [from Eqs. (9.5)] are taken from the handbook [6] (p. 84).

Elastic Constants of Plywood (Four Kinds) Table 6

Elastic constants	Name of grade of plywood			
	Birch plywood	БС-1 grade 1	БФС	ФСФ
$E_1 \cdot 10^{-5}$ (in kgf/cm²)	1.2	1.10	1.48	1.09
$E_2 \cdot 10^{-5}$ "	0.6	0.85	1.00	0.87
$E' \cdot 10^{-5}$ "	0.24	0.30	0.44	0.28
$G \cdot 10^{-5}$ "	0.07	0.09	0.135	0.079
ν_1	0.071	0.076	0.088	0.174
ν_2	0.036	0.06	0.062	0.038

Table 6 gives numerical values of the elastic constants for the four kinds of plywood, namely the moduli E_1, E_2 in tension along the principal directions (along the fibres of the jacket and perpendicular to the fibres) and also the moduli E' in tension at an angle of 45° to the fibres, the shear moduli G and Poisson's ratios ν_1, ν_2.

Note that the shear modulus G for ФСФ plywood is not given in [6], but it can be calculated if E_1, E_2, E', ν_1, and ν_2 are known (as has been done in Table 6).

Speaking of anisotropic materials, we must refer, if only briefly, to modern composite materials, which have found wide application by now in modern engineering owing to their valuable strength, elastic, and other properties. Such materials are composed of reinforcing elements of high strength and stiffness and of a less strong and less stiff binder providing the solidity of a composition. Extensive use is made of glass-fibre reinforced plastics, which are composed of a plastic material reinforced with very fine glass fibres (cords) twisted into strands of 100 to 200 fibres, or with glass fabric of various weave. Some glass-fibre reinforced plastics are produced by contact moulding and cold curing of binder, others are made by winding glass fibres, strands, strips and hot moulding, and by other technological processes.

Information on glass-fibre reinforced plastics (as to what kinds are used in engineering, how they are fabricated, their grades, etc.) may be found in [6] (Chap. 1) and in [7] (Chap. 1). They also provide detailed data on the strength and elastic properties of glass-fibre reinforced plastics, on quantities characterizing these properties, and on procedures for determining the strength and elastic characteristics (see also the monograph [15]). One of the first works on glass-fibre reinforced plastics (of the CBAM type) was that by A. K. Burov and G. D. Andreevskaya [10].

A reinforced material may be regarded, to some order of approximation, as a homogeneous and anisotropic elastic medium having a certain kind of structural symmetry, depending on the symmetry of reinforcement, which entails elastic symmetry. Some glass-fibre reinforced plastics may be treated as orthotropic elastic media (of course, within the limits in which the strains produced by an external load may be considered elastic); others may be regarded as transversely isotropic and even as isotropic media. The question as to how the elastic characteristics of a reinforced material can be determined theoretically is studied in detail in [55]. Of numerous glass-fibre reinforced plastics we shall consider three kinds, which are of great importance in shipbuilding. These glass-fibre reinforced plastics are studied in two papers, [46] and [45], which contain comprehensive information on these materials. Besides, we shall consider one more glass-fibre reinforced plastic the information on which may be found in the handbook [6]. We list these materials.

(1) Unidirectional, wound glass-fibre reinforced plastic. It is composed of a binder reinforced with parallel glass fibres. Compared to glass-fibre reinforced plastics of different structure, it exhibits a maximum strength and stiffness in the reinforcement direction. The material may be regarded as a transversely isotropic body with planes of isotropy normal to the fibres. By taking the z axis along the fibres, the generalized Hooke's law equations for this body are obtained in the form of (4.8) or (4.9).

(2) Glass-fibre laminate of orthogonal reinforcement. Its base is formed by several layers of parallel fibres, layers with fibres directed in a certain manner alternating with layers in which the fibres are perpendicular to those of the

first layer (for example, a layer of the first kind, a layer of the second kind, a layer of the first kind and so on, which is designated as 1 : 1, or two layers of the first kind, a layer of the second kind, two layers of the first kind and so on, which is designated as 2 : 1, etc.). This material may be regarded as an orthotropic one, in which one plane of elastic symmetry is normal to the fibres of the first kind, the second is normal to the fibres of the second kind, and the third is parallel to the layers (orthogonal to the first two). For this material and the other two, (3) and (4), the generalized Hooke's law equations are of the form of (4.6).

(3) СТЭТ hot moulded glass-fabric laminate.

(4) Plastic based on glass fabric of grade АСТТ (б)-C_2-0 and polyester resin of grade ПН-3 (АСТТ(б)-C_2-0 and ПН-3).

All elastic constants have been obtained for these four materials; their values are given in Table 7.*

Elastic Constants of Glass-fibre Reinforced Plastics (Four Kinds) Table 7

Elastic constants	Name or grade of plastics			
	Filament-wound uni-directional	Orthogonally reinforced, 2 : 1	СТЭТ	АСТТ (б)-C_2-0 and ПН-3
$E_1 \cdot 10^{-5}$ (in kgf/cm²)	5.70	3.68	3.59	1.79
$E_2 \cdot 10^{-5}$ "	1.40	2.68	2.93	1.31
$E_3 \cdot 10^{-5}$ "	1.40	1.10	1.83	0.43
$G_{12} \cdot 10^{-5}$ "	0.57	0.50	0.76	0.28
$G_{23} \cdot 10^{-5}$ "	0.50	0.41	0.63	0.24
$G_{31} \cdot 10^{-5}$ "	0.57	0.45	0.66	0.24
ν_{12}	0.277	0.105	0.177	0.15
ν_{23}	0.400	0.431	0.371	0.31
ν_{31}	0.068	0.405	0.157	0.08

10. Curvilinear Anisotropy

In a homogeneous body with rectilinear anisotropy, all parallel directions are equivalent as regards the elastic

* We have somewhat changed the notation of [45], [46], and [6]. In all cases it is assumed that the direction of the x axis corresponds to that for which the modulus $E = E_1$ is maximum.

properties, and all elements in the form of identical rectangular parallelepipeds with respectively parallel faces have the same elastic properties. But homogeneous bodies may have curvilinear as well as rectilinear anisotropy. The curvilinear anisotropy of a homogeneous body is characterized by the fact that the equivalent directions for its different points are not parallel, but obey some other laws. If we choose a system of curvilinear orthogonal co-ordinates so that the co-ordinate directions at each point coincide with the equivalent directions (as regards the elastic properties), then infinitesimal elements isolated by three pairs of co-ordinate planes will have the same elastic properties. Conversely, elements formed by three pairs of orthogonal planes will, in general, have different elastic properties.

Let a body be homogeneous, curvilinearly anisotropic, and let it obey the generalized Hooke's law, i.e., the strain components are linear functions of the stress components, and vice versa. Denote the co-ordinate directions of the curvilinear co-ordinate system in question by ξ, η, ζ. Assuming that there exists an elastic potential, the generalized Hooke's law equations for a homogeneous, curvilinearly anisotropic body may then be written as

$$\left.\begin{aligned}
\varepsilon_\xi &= a_{11}\sigma_\xi + a_{12}\sigma_\eta + a_{13}\sigma_\zeta + a_{14}\tau_{\eta\zeta} + a_{15}\tau_{\xi\zeta} + a_{16}\tau_{\xi\eta},\\
\varepsilon_\eta &= a_{12}\sigma_\xi + a_{22}\sigma_\eta + \ldots\ldots\ldots\ldots\ldots\ldots + a_{26}\tau_{\xi\eta},\\
&\ldots\ldots\ldots\ldots\ldots\ldots\ldots\ldots\ldots\ldots\\
\gamma_{\xi\eta} &= a_{16}\sigma_\xi + a_{26}\sigma_\eta + \ldots\ldots\ldots\ldots\ldots\ldots + a_{26}\tau_{\xi\eta}.
\end{aligned}\right\} \quad (10.1)$$

The equations contain, in general, 21 elastic constants, but only 18 of them are independent (invariant), as for a rectilinearly anisotropic body. In this case, too, the generalized Hooke's law equations can, of course, be written in an orthogonal Cartesian co-ordinate system, but then the coefficients a_{ij} in the generalized Hooke's law equations are no longer constant, but vary from point to point due to a change in coordinate directions.

Equations (10.1) are simplified if a body exhibits elastic symmetry, and these simplifications are the same as in the case of rectilinear anisotropy. Thus, we may speak of a curvilinearly orthotropic body, of a body that is transversely isotropic with respect to any of the ξ, η, ζ directions, etc.

On the other hand, the concept of curvilinear anisotropy may be generalized by considering curvilinearly anisotropic non-homogeneous bodies for which the coefficients a_{ij} from Eqs. (10.1) are functions of position.

Of the various types of curvilinear anisotropy, two types, considered by Saint-Venant long ago, are of greatest practical interest: (1) cylindrical anisotropy and (2) spherical anisotropy (see [113]).

(a) *Cylindrical anisotropy.* Let a straight line g, an axis of anisotropy, be fixed in relation to a body so that it may pass either inside the body or outside it (for example, in a cavity), or else along its surface. All directions parallel to g and passing through different points are equivalent; all directions intersecting g at right angles (radial) are also equivalent, and all directions orthogonal to the first two (tangential) are equivalent. Infinitesimal elements are equivalent or identical if they are bounded by three pairs of surfaces: two planes normal to g, two planes passing through g, and two cylindrical surfaces with a common axis g. By taking the axis of anisotropy g as the z axis of a cylindrical co-ordinate system r, θ, z, with the x axis, from which the angles θ are measured, directed arbitrarily, we write the generalized Hooke's law equations in the general case of cylindrical anisotropy as

$$\left.\begin{aligned}
\varepsilon_r &= a_{11}\sigma_r + a_{12}\sigma_\theta + a_{13}\sigma_z + a_{14}\tau_{\theta z} + a_{15}\tau_{rz} + a_{16}\tau_{r\theta},\\
\varepsilon_\theta &= a_{12}\sigma_r + a_{22}\sigma_\theta + \ldots\ldots\ldots\ldots\ldots\ldots + a_{26}\tau_{r\theta},\\
&\ldots\ldots\ldots\ldots\ldots\ldots\ldots\ldots\ldots\ldots\\
\gamma_{r\theta} &= a_{16}\sigma_r + a_{26}\sigma_\theta + \ldots\ldots\ldots\ldots\ldots\ldots + a_{66}\tau_{r\theta}.
\end{aligned}\right\} \qquad (10.2)$$

If the body is non-homogeneous, the coefficients a_{ij} are functions of the cylindrical co-ordinates.

Here it is essential to make a very important remark. If the axis of anisotropy passes outside the body (for example, inside a cavity), Eqs. (10.2) are not questionable. But if the axis of anisotropy passes through the body, there must necessarily be relations among different a_{ij} in a homogeneous body. Indeed, on the z axis coinciding with g there is no difference between the r and θ directions, and all radial directions r must be equivalent not only among themselves,

but also among all tangential directions θ. Equations (10.2) can therefore be written in a different way. Rearranging the equations, we write system (10.2) as

$$\left.\begin{aligned}
\varepsilon_r &= a_{22}\sigma_r + a_{12}\sigma_\theta + a_{23}\sigma_z + a_{25}\tau_{\theta z} + a_{24}\tau_{rz} + a_{26}\tau_{r\theta},\\
\varepsilon_\theta &= a_{12}\sigma_r + a_{11}\sigma_\theta + \ldots\ldots\ldots\ldots\ldots\ldots + a_{16}\tau_{r\theta},\\
&\ldots\ldots\ldots\ldots\ldots\ldots\ldots\ldots\ldots\ldots\\
\gamma_{r\theta} &= a_{26}\sigma_r + a_{16}\sigma_\theta + \ldots\ldots\ldots\ldots\ldots\ldots + a_{66}\tau_{r\theta}.
\end{aligned}\right\} \tag{10.3}$$

On comparing the systems, we obtain the obvious equalities:

$$\left.\begin{aligned}
&a_{22} = a_{11}, \quad a_{23} = a_{13}, \quad a_{55} = a_{44}, \quad a_{26} = a_{16},\\
&a_{35} = a_{34}, \quad a_{56} = a_{46}, \quad a_{24} = a_{15}, \quad a_{25} = a_{14},
\end{aligned}\right\} \tag{10.4}$$

(there are altogether eight relations). If at each point there is one plane of elastic symmetry perpendicular to the axis z (or g), then

$$\left.\begin{aligned}
a_{14} = a_{24} = a_{34} = a_{46} = 0,\\
a_{15} = a_{25} = a_{35} = a_{56} = 0;
\end{aligned}\right\} \tag{10.5}$$

$$a_{22} = a_{11}, \quad a_{23} = a_{13}, \quad a_{26} = a_{16}, \quad a_{55} = a_{44}. \tag{10.6}$$

In an orthotropic body with planes of symmetry passing through the axis of anisotropy (radial and tangential), in addition to the above relations we have

$$a_{16} = a_{26} = a_{36} = a_{45} = 0, \tag{10.7}$$

and the non-zero coefficients are related by three equalities:

$$a_{22} = a_{11}, \quad a_{23} = a_{13}, \quad a_{55} = a_{44}. \tag{10.8}$$

All these equalities, (10.4) to (10.8), also hold for a non-homogeneous body. In a non-homogeneous body, equalities (10.4), (10.6), (10.8) can be fulfilled on account of the fact that the corresponding a_{ij} are functions of r (and possibly of the other variables, θ, and z, as well) and become zero or infinite on the axis itself. In a homogeneous body in which the axis of anisotropy *intersects* the body, a_{ij} are constant and there can be no anisotropy of the general kind since equalities (10.4), (10.6), or (10.8) must always be fulfilled. This has been pointed out by Voigt in [128].

In the case of an orthotropic body with cylindrical anisotropy it is sometimes more convenient to deal with the

engineering constants or elastic characteristics, namely Young's and shear moduli and Poisson's ratios. Introducing the corresponding symbols (with letter subscripts), we write Eqs. (10.2) as

$$\left.\begin{aligned}
\varepsilon_r &= \frac{1}{E_r}\sigma_r - \frac{\nu_{\theta r}}{E_\theta}\sigma_\theta - \frac{\nu_{zr}}{E_z}\sigma_z, & \gamma_{\theta z} &= \frac{1}{G_{\theta z}}\tau_{\theta z},\\
\varepsilon_\theta &= -\frac{\nu_{r\theta}}{E_r}\sigma_r + \frac{1}{E_\theta}\sigma_\theta - \frac{\nu_{z\theta}}{E_z}\sigma_z, & \gamma_{rz} &= \frac{1}{G_{rz}}\tau_{rz},\\
\varepsilon_z &= -\frac{\nu_{rz}}{E_r}\sigma_r - \frac{\nu_{\theta z}}{E_\theta}\sigma_\theta + \frac{1}{E_z}\sigma_z, & \gamma_{r\theta} &= \frac{1}{G_{r\theta}}\tau_{r\theta}.
\end{aligned}\right\} \qquad (10.9)$$

If the structure of a body is such that the axis of anisotropy intersecting it is not inside a through cavity, we must necessarily have

$$E_\theta = E_r, \quad \nu_{z\theta} = \nu_{\theta z}, \quad G_{\theta z} = G_{rz}. \qquad (10.10)$$

Equations (10.9) may be written in a different way by introducing the strain coefficients with numeral subscripts a_{ij} ($i, j = r, \theta, z$). In Eqs. (10.9)

$$E_i\nu_{ji} = E_j\nu_{ij}. \qquad (10.11)$$

An example of a body having cylindrical anisotropy is afforded by a wooden block with regular cylindrical annual rings. In the case shown in Fig. 14 the curvature of annual rings can no longer be neglected, and the block may be regarded as a homogeneous body with cylindrical anisotropy (to a first approximation, of course). The axis of anisotropy g coincides with the axis of the core. If this axis, being inside the block, were an ideal straight line, the generalized Hooke's law equations could be written in the form of (10.9), subject to conditions (10.10), but actually the core differs from the remainder of the block also in that often this is a line where radial cracks converge, and hence the solidity is disrupted. The question is more complicated than might appear at first

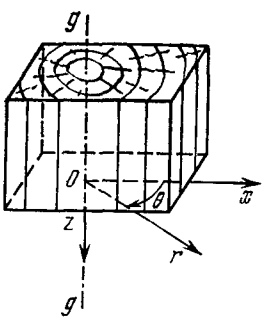

Fig. 14

sight, and wood with a core within the boundaries of a specimen may be treated as a cylindrically anisotropic body only to a first approximation, and even conditionally.

Cylindrical anisotropy may develop in metallic products as a result of the corresponding technological forming processes (such as the extrusion of tubes, drawing of wire). A model of a body having cylindrical anisotropy to a first approximation is an arch constructed of a sufficiently large

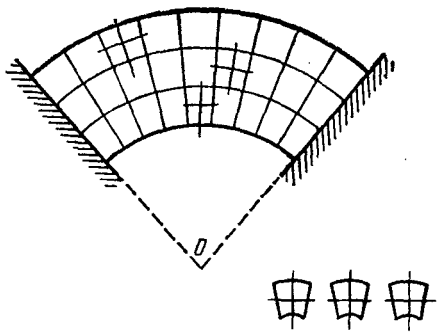

Fig. 15

number of homogeneous elements ("bricks") without clearances. Each element has rectilinear anisotropy, but the principal axes of elasticity for the elements form angles so that the arch as a whole behaves as a cylindrically anisotropic body (Fig. 15).

(2) *Spherical anisotropy.* The curvilinear anisotropy of this type is characterized by the following. Let a point O (centre of anisotropy) and a straight line g (axis of anisotropy) passing through the centre be fixed in relation to a homogeneous body. The directions of all rays emanating from the centre are equivalent; moreover, the directions of the tangents to meridians of all spherical surfaces with common centre O, passing through the points of intersection of the surfaces and g, are equivalent; the directions tangential to parallels of all spherical surfaces are also equivalent (Fig. 16). By taking the equivalent directions as the co-ordinate directions of a spherical system ρ, θ, φ, we have, for this

body, the generalized Hooke's law equations (10.1), where it is necessary to put $\xi = \rho$, $\eta = \theta$, $\zeta = \varphi$. If the centre of anisotropy O lies outside the body or in a cavity of the body, there is no reason to expect that a_{ij} are related by any equalities like (10.4). But if the centre of anisotropy coincides with a point belonging to the body, there is evidently no difference between the directions ρ, θ, φ, i.e., the three directions must be equivalent. By writing the generalized Hooke's law equations, and taking into account the equivalence of all directions ρ, θ. φ, we obtain a series of relations among a_{ij}, which are not given here; they will not be needed in what follows.

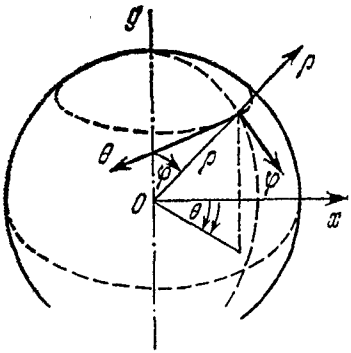

Fig. 16

It may also be said that a non-homogeneous curvilinearly anisotropic body may have elements of elastic symmetry depending on its structure. The most important case is one where through each point there pass three mutually perpendicular planes of elastic symmetry (orthotropic body). For a body with cylindrical anisotropy, the most important case of orthotropy is one where the first of the planes of elastic symmetry is normal to the axis of anisotropy, the second passes through this axis, and the third is normal to the first two.

If the elastic characteristics a_{ij} or E_i, G_{ij}, ν_{ij} for a curvilinearly anisotropic body are functions of position, it may appropriately be called curvilinearly anisotropic and non-homogeneous. For a suitable choice of co-ordinate directions, the generalized Hooke's law for such a body is written as for the corresponding body with rectilinear anisotropy, but the characteristics a_{ij} are now functions of position.

11. General Equations of the Theory of Elasticity and Formulation of Fundamental Problems. Basic Variational Principles

The state of stress in an elastic body may be considered known if the components of stress are known at any of its points (and at any instant if the motion of a body is under discussion). The state of strain is defined by the components of strain, which depend on three projections of displacement on the co-ordinate directions. Thus, to describe fully the state of stress and strain in a body subjected to external forces, we need to determine nine functions: six components of stress and three projections of displacement. In particular, if we use Cartesian co-ordinates, the independent variables are the co-ordinates x, y, z and the time.

A complete system of equations for the determination of six components of stress and three projections of displacement is obtained by taking three equations of equilibrium or motion for a continuous medium, and by adding to them six equations expressing the generalized Hooke's law. This system, containing all the unknown functions and consisting of nine independent equations (three equations of equilibrium or motion for a continuous medium and six equations representing the generalized Hooke's law), is called the fundamental system of equations of equilibrium or motion for an elastic body ([32], [26]).

Let us consider the case when we use Cartesian co-ordinates (x, y, z; t). The fundamental system of equilibrium equations for a body having no elements of elastic symmetry is written as

$$\left.\begin{aligned}
&\frac{\partial\sigma_x}{\partial x}+\frac{\partial\tau_{xy}}{\partial y}+\frac{\partial\tau_{xz}}{\partial z}+X=0,\\
&\cdots\cdots\cdots\cdots\cdots\cdots\cdots\cdots\\
&\varepsilon_x=a_{11}\sigma_x+a_{12}\sigma_y+a_{13}\sigma_z+a_{14}\tau_{yz}+a_{15}\tau_{xz}+a_{16}\tau_{xy},\\
&\varepsilon_y=a_{12}\sigma_x+a_{22}\sigma_y+\cdots\cdots\cdots\cdots\cdots+a_{26}\tau_{xy},\\
&\cdots\cdots\cdots\cdots\cdots\cdots\cdots\cdots\\
&\gamma_{xy}=a_{16}\sigma_x+a_{26}\sigma_y+\cdots\cdots\cdots\cdots\cdots+a_{66}\tau_{xy},
\end{aligned}\right\}\qquad(11.1)$$

where in the case of small strains ε_x, ε_y, . . ., γ_{xy} are related to the displacements by formulas (1.2); X, Y, Z are the projections of the body forces per unit volume.

If a motion is considered, the equations of motion differ from the equations of equilibrium only in that the right-hand sides of the first three equations of (11.1) must involve, not zeros, but terms proportional to the second time derivatives of the displacement $\bar{\rho}\frac{\partial^2 u}{\partial t^2}$, $\bar{\rho}\frac{\partial^2 v}{\partial t^2}$, $\bar{\rho}\frac{\partial^2 w}{\partial t^2}$ ($\bar{\rho}$ is th edensity, i.e., mass in unit volume of substance). The remaining equations are written in the same way as (11.1). System (11.1) may be replaced by an equivalent one. We may take the generalized Hooke's law equations in the form solved for σ and τ (they will contain the moduli A_{ij}), or alternatively we may eliminate the stresses or displacements (the stresses are much easier to eliminate) from system (11.1), etc. The problem of the elastic equilibrium of an anisotropic body reduces to that of determining the above nine functions satisfying system (11.1) (or an equivalent system) and the surface conditions.

Three fundamental problems of elastostatics may be distinguished depending on what is prescribed on the surface: the first, second, and mixed problems (see [32], pp. 70-72).

First fundamental problem. External forces are prescribed over the whole surface; it is required to determine the stresses and displacements at any point inside the body and on the surface. Alternatively, three components of external forces may be prescribed over the surface, namely their projections on three non-coincident directions, for example the normal component σ and two projections of tangential forces on two orthogonal directions. It is most common to prescribe three projections of forces on the directions of the co-ordinate axes, X_n, Y_n, Z_n (n is the direction of the outward normal to the surface; the components of forces refer to unit area).

The boundary conditions are written as

$$\left.\begin{aligned}
\sigma_x \cos(n, x) + \tau_{xy} \cos(n, y) + \tau_{xz} \cos(n, z) &= X_n, \\
\tau_{xy} \cos(n, x) + \sigma_y \cos(n, y) + \tau_{yz} \cos(n, z) &= Y_n, \\
\tau_{xz} \cos(n, x) + \tau_{yz} \cos(n, y) + \sigma_z \cos(n, z) &= Z_n.
\end{aligned}\right\} \quad (11.2)$$

Second fundamental problem. The projections of displacement on three non-coincident directions are prescribed over the whole surface; for example, the projections u^*, v^*, w^*

on the axes of a Cartesian rectangular co-ordinate system. The boundary conditions are of the form

$$u = u^*, \quad v = v^*, \quad w = w^*. \tag{11.3}$$

Mixed problem. Forces are prescribed over a part of the surface, and displacements over the remainder. The boundary conditions on the first part of the surface are written in the form of (11.2), and on the second in the form of (11.3). To mixed problems also belong those where the components prescribed over the surface include one component of forces (for example, normal component) and two components of displacement, or one component of displacement and two components of forces, etc. Depending on the shape of a body and the distribution of forces, it is often more convenient to use a suitable curvilinear co-ordinate system rather than a Cartesian system.

By eliminating the stress components from system (11.1), we obtain three equations containing only the projections of displacement. For an orthotropic body moving under the action of external forces or performing free vibrations the equations of motion in terms of the projections of displacement are of the form

$$\left.\begin{aligned}
&A_{44}\frac{\partial^2 u}{\partial x^2}+A_{66}\frac{\partial^2 u}{\partial y^2}+A_{55}\frac{\partial^2 u}{\partial z^2}+\frac{\partial}{\partial x}\Big[(A_{11}-A_{44})\frac{\partial u}{\partial x}+\\
&\quad+(A_{12}+A_{66})\frac{\partial v}{\partial y}+(A_{13}+A_{55})\frac{\partial w}{\partial z}\Big]+X=\bar{\rho}\frac{\partial^2 u}{\partial t^2},\\
&A_{66}\frac{\partial^2 v}{\partial x^2}+A_{55}\frac{\partial^2 v}{\partial y^2}+A_{44}\frac{\partial^2 v}{\partial z^2}+\frac{\partial}{\partial y}\Big[(A_{12}+A_{66})\frac{\partial u}{\partial x}+\\
&\quad+(A_{22}-A_{55})\frac{\partial v}{\partial y}+(A_{23}+A_{44})\frac{\partial w}{\partial z}\Big]+Y=\bar{\rho}\frac{\partial^2 v}{\partial t^2},\\
&A_{55}\frac{\partial^2 w}{\partial x^2}+A_{44}\frac{\partial^2 w}{\partial y^2}+A_{66}\frac{\partial^2 w}{\partial z^2}+\frac{\partial}{\partial z}\Big[(A_{13}+A_{55})\frac{\partial u}{\partial x}+\\
&\quad+(A_{23}+A_{44})\frac{\partial v}{\partial y}+(A_{33}-A_{66})\frac{\partial w}{\partial v}\Big]+Z=\bar{\rho}\frac{\partial^2 w}{\partial t^2}
\end{aligned}\right\} \tag{11.4}$$

(in the problem of free vibrations $X = Y = Z = 0$).

The uniqueness of solution of the equilibrium equations for a homogeneous body undergoing small strains when the strain components are linear functions of the derivatives o

displacements with respect to the co-ordinates is established dy Kirchhoff's theorem.*

If the exact solution to problems involving the equilibrium of an elastic body is difficult to find (and such cases are frequently encountered in practice), approximate solutions may be obtained by using variational methods described in detail in [23] and [24]. These methods are based on the principle of virtual work, or the principle of virtual displacements as it is sometimes called, and the least work principle.

The virtual work principle. By virtual displacements we mean displacements in an elastic body under which it remains continuous and the boundary conditions on parts of the surface deformed in a given manner or fixed (i.e., on those where displacements are prescribed) are satisfied. In other words, these are displacements admissible by geometrical constraints imposed on an elastic body.

Let X_n, Y_n, Z_n be the projections of external surface forces (per unit area), X, Y, Z the projections of body forces (per unit volume), V the strain energy of the whole body expressed in terms of the displacement components, and δu, δv, δw the variations of displacements admissible by geometrical constraints.

According to the virtual work principle, we have, for the elastic equilibrium of a body,

$$\iiint (X\delta u + Y\delta v + Z\delta w)\, d\omega + \\ + \iint (X_n\delta u + Y_n\delta v + Z_n\delta w)\, dS - \delta V = 0. \quad (11.5)$$

This equation is called the Lagrange variational equation; $d\omega$ is the volume differential, dS is the surface differential, δV is the variation of the strain energy corresponding to the variations of displacements. The triple integral is taken over the entire volume of the body, and the double (surface) integral over the part of the surface where forces are prescribed. From this, by transforming (11.5), we come to the conclusion that the displacements occurring in the actual state of equi-

* See, for example, [24], Sec. 118, pp. 309-311. The question of the uniqueness of solution of the equilibrium equations for a non-homogeneous body is still not completely studied.

librium differ from all possible displacements in that they give a minimum value to the expression (see [23], p. 141, or [24], pp. 314-317)

$$\mathscr{E} = \iiint \overline{V}\, d\omega - \iiint (Xu + Yv + Zw)\, d\omega - \\ - \iint (X_n u + Y_n v + Z_n w)\, dS. \qquad (11.6)$$

The least work principle. Along with the actual stresses $\sigma_x, \sigma_y, \ldots, \tau_{xy}$ occurring in an *elastic* body that is in equilibrium under external forces, we consider statically possible stresses, i.e., those satisfying the equilibrium equations for a continuous medium and the conditions on parts of the surface where forces are prescribed. Let these possible stresses be denoted as

$$\sigma_x + \delta\sigma_x, \quad \sigma_y + \delta\sigma_y, \ \ldots, \ \tau_{xy} + \delta\tau_{xy}.$$

The stresses $\sigma_x + \delta\sigma_x, \ldots, \tau_{xy} + \delta\tau_{xy}$, as well as $\sigma_x, \ldots, \tau_{xy}$, satisfy the equilibrium equations for a continuous medium and the surface conditions involving prescribed forces. Consequently, the variations of stresses satisfy the homogeneous equilibrium conditions for a continuous medium ($X = Y = Z = 0$) and the surface conditions:

$$\left.\begin{aligned} &\delta\sigma_x \cos(n, x) + \delta\tau_{xy} \cos(n, y) + \delta\tau_{xz} \cos(n, z) = \delta X_n, \\ &\delta\tau_{xy} \cos(n, x) + \delta\sigma_y \cos(n, y) + \delta\tau_{yz} \cos(n, z) = \delta Y_n, \\ &\delta\tau_{xz} \cos(n, x) + \delta\tau_{yz} \cos(n, y) + \delta\sigma_z \cos(n, z) = \delta Z_n, \end{aligned}\right\} \qquad (11.7)$$

with $\delta X_n = \delta Y_n = \delta Z_n = 0$ on the part of the surface where forces are prescribed. The analytic expression of the least work principle is the Castigliano variational formula:

$$\delta V = \iint (u\delta X_n + v\delta Y_n + w\delta Z_n)\, dS. \qquad (11.8)$$

Here V is the strain energy as a function of the stress components, and δV its variation corresponding to the

variations of these components. We conclude after some rearrangement that the stresses corresponding to the actual state of equilibrium differ from all statically possible stresses in that they give a minimum value to the expression (see [23], p. 19 and [24], pp. 317-322)

$$\mathscr{E}_1 = \int\int\int \overline{V}\, d\omega - \int\int (X_n u + Y_n v + Z_n w)\, dS. \qquad (11.9)$$

The book by L. S. Leibenzon [23] contains numerous problems of elasticity solved by using a variety of variational methods (see also [25]).

THE SIMPLEST CASES OF ELASTIC EQUILIBRIUM

Chapter 2

This chapter is concerned with the simplest cases of stress distribution in anisotropic bodies, mainly in bars and plates. The formulas for the stress and displacement components will be given without derivation since they are obtained in an elementary way. In all cases considered in this chapter (and in the following ones) use is made of the well-known Saint-Venant principle permitting a considerable simplification in the formulation of some problems*.

12. Extension of a Bar under an Axial Force and Its Own Weight

The simplest problem of the theory of elasticity is that of the extension of a bar by an axial force applied at its end. This problem was considered by W. Voigt as early as 1928 ([38], p. 631), and in greater detail by A. L. Rabinovich [108]. Consider a cylindrical or prismatic bar made of a homogeneous material exhibiting (rectilinear) anisotropy of the most general kind. Suppose one of its ends is fixed, and the other is acted on by forces reducing to a resultant P directed along the axis of the bar. Let the origin of coordinates be placed at the centroid of the fixed section, with the z axis directed along the axis of the bar, the x and y axes being directed arbitrarily (Fig. 17). Let l and S denote the length and the cross-sectional area of the unde-

* See, for example, the course by L. S. Leibenzon [24], Sec. 49, pp. 104-105.

formed bar, and let a_{ij} be the elastic constants (strain coefficients) from the generalized Hooke's law equations, which in this general case are of the form of (3.8). For the present, the weight of the bar itself is neglected.

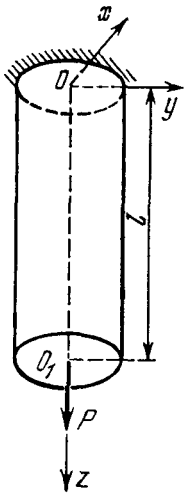

Fig. 17

If it is assumed that the forces at the lower end and the reactions at the upper end are uniformly distributed and are normal to the planes of the extreme sections, the stress and strain components satisfying the equilibrium equations (11.1) for an elastic body and the surface conditions are determined by the formulas

$$\left.\begin{aligned} &\sigma_z = \frac{P}{S}, \\ &\sigma_x = \sigma_y = \tau_{yz} = \tau_{xz} = \tau_{xy} = 0; \end{aligned}\right\} \tag{12.1}$$

$$\left.\begin{aligned} &\varepsilon_x = \frac{P}{S} a_{13}, \quad \gamma_{yz} = \frac{P}{S} a_{34}, \\ &\varepsilon_y = \frac{P}{S} a_{23}, \quad \gamma_{xz} = \frac{P}{S} a_{35}, \\ &\varepsilon_z = \frac{P}{S} a_{33}, \quad \gamma_{xy} = \frac{P}{S} a_{36}. \end{aligned}\right\} \tag{12.2}$$

Determining the displacements by integration, we obtain

$$\left.\begin{aligned} u &= \frac{P}{S}(a_{13}x + a_{36}y + a_{35}z) + \omega_2 z - \omega_3 y + u_0, \\ v &= \frac{P}{S}(a_{23}y + a_{34}z) \qquad\qquad + \omega_3 x - \omega_1 z + v_0, \\ w &= \frac{P}{S} a_{33} z \qquad\qquad\qquad\qquad + \omega_1 y - \omega_2 x + w_0. \end{aligned}\right\} \tag{12.3}$$

Here ω_1, ω_2, ω_3, u_0, v_0, w_0 are constants characterizing a rigid-body displacement in space not accompanied by strain; the first three characterize the displacements during rotation about the co-ordinate axes, and the last three define the translational displacements along the axes. These constants are determined from the fixing conditions of the bar. Assuming an infinitesimal element on the z axis around

the origin to be fixed, we have the conditions, for $x = y = z = 0$:

$$\left.\begin{aligned} u = v = w = 0 \\ \frac{\partial u}{\partial z} = \frac{\partial v}{\partial z} = \frac{\partial v}{\partial x} - \frac{\partial u}{\partial y} = 0. \end{aligned}\right\} \tag{12.4}$$

On satisfying them, we obtain

$$\left.\begin{aligned} u = \frac{P}{S}(a_{13}x + 0.5a_{36}y), \quad v = \frac{P}{S}(0.5a_{36}x + a_{23}y), \\ w = \frac{P}{S}(a_{35}x + a_{34}y + a_{33}z). \end{aligned}\right\} \tag{12.5}$$

Formulas (12.2) show that in the general case of anisotropy the bar not only lengthens in the direction of the force and shortens in the transverse directions, but also undergoes shears in all planes parallel to the co-ordinate planes. These shears are characterized by the coefficients a_{34}, a_{35}, and a_{36}, which are expressed in terms of Young's or the shear moduli and the mutual influence coefficients of the first and second kind

$$\left.\begin{aligned} a_{34} = \frac{\eta_{z,\,yz}}{G_{yz}} = \frac{\eta_{yz,\,z}}{E_z}, \\ a_{35} = \frac{\eta_{z,\,zx}}{G_{xz}} = \frac{\eta_{zx,\,z}}{E_z}, \\ a_{36} = \frac{\eta_{z,\,xy}}{G_{xy}} = \frac{\eta_{xy,\,z}}{E_z}. \end{aligned}\right\} \tag{12.6}$$

The cross sections remain plane, but because of the shears they incline to the line of action of the force. A bar that has the shape of a rectangular parallelepiped is deformed into an oblique parallelepiped (Fig. 18). The absolute extension of the bar (or, more precisely, of its axis) is

$$f = \frac{Pla_{33}}{S} = \frac{Pl}{E_z S}. \tag{12.7}$$

If at each point there is a plane of elastic symmetry normal to the axis, then $a_{34} = a_{35} = 0$ and $\gamma_{yz} = \gamma_{xz} = 0$; the

lateral faces of a bar in the form of a rectangular parallelepiped remain rectangular, and the angles of the cross section change. Finally, if the bar is orthotropic, i.e., it has, in addition, planes of elastic symmetry parallel to the axis, the elongation is not accompanied by shears, and the angles of the faces of the parallelepiped do not distort.

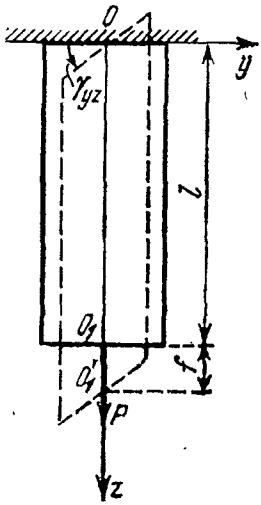

Fig. 18

All formulas are strictly valid only for one special case of the distribution of forces and reactions. But, on the basis of Saint-Venant's principle, they can also be used in the case of forces reducing to forces P arbitrarily distributed over the ends; it is only necessary to exclude from consideration the narrow regions near the ends where the basic picture of the stresses and strains is distorted because of the local stresses and strains dependent on the law of distribution of forces and on the mode of fixing. This remark also applies to other cases of the deformation of bars and to plates.

If the bar shown in Fig. 17 (fixed in the vertical position) is deformed only under its own weight, we obtain ([38], Sec. 331)

$$X = Y = 0, \quad Z = \gamma, \tag{12.8}$$

$$\sigma_z = \gamma (l - z), \quad \sigma_x = \sigma_y = \tau_{yz} = \tau_{xz} = \tau_{xy} = 0, \tag{12.9}$$

where γ is the specific weight of the material.

Assuming that the upper end is fixed in the same way as for the bar extended by a force, i.e., the displacements satisfy conditions (12.4), we obtain

$$\left.\begin{aligned} u &= \gamma\,[-0.5a_{35}z^2 + (a_{13}x + 0.5a_{36}y)(l - z)], \\ v &= \gamma\,[-0.5a_{34}z^2 + (a_{23}y + 0.5a_{36}x)(l - z)], \\ w &= \gamma\,[0.5\,(a_{13}x^2 + a_{23}y^2 + a_{36}xy) + \\ &\qquad + (a_{34}y + a_{35}x)\,l + 0.5a_{33}z\,(2l - z)]. \end{aligned}\right\} \tag{12.10}$$

It is seen from this that the cross sections do not remain plane, but assume the shape of a second-degree surface. In the general case of anisotropy the axis becomes curved, and the equation of the deflected axis is

$$x' = -0.5\gamma a_{35}z^2, \quad y' = -0.5\gamma a_{34}z^2. \tag{12.11}$$

The centroid of the lower end is displaced not only along the z axis, but also sideways, and the projections of its displacement on the co-ordinate axes are determined by the formulas

$$\left.\begin{aligned} f_x &= -0.5\gamma l^2 a_{35} = -0.5\gamma l^2 \frac{\eta_{zx,z}}{E_z}, \\ f_y &= -0.5\gamma l^2 a_{34} = -0.5\gamma l^2 \frac{\eta_{yz,z}}{E_z}, \\ f_z &= 0.5\gamma l^2 a_{33} = 0.5\gamma l^2 \frac{1}{E_z}. \end{aligned}\right\} \tag{12.12}$$

If, however, the bar is fixed so that the centroid of the lower surface remains on the vertical, its displacement along the vertical is as before [see the third formula of (12.12)), and the axis of the bar assumes the shape of a curve:

$$x' = 0.5\gamma a_{35}(lz - z^2), \quad y' = 0.5\gamma a_{34}(lz - z^2). \tag{12.13}$$

There will be no deflection of the axis only if the constants a_{34} and a_{35} are zero (for example, when there is a plane of elastic symmetry normal to the axis).

As formulas (12.1) and (12.9) show, the stress distribution in an extended anisotropic bar is identical with the distribution in the same bar of isotropic material, i.e., it is independent of the elastic properties. The anisotropy has an effect on the strains only. This is true not only for tension, but also for all other cases considered in the present chapter.

13. Shear

A homogeneous body in the form of a rectangular parallelepiped is in equilibrium under the action of tangential forces distributed uniformly over its four faces.

Let l, b, h be the lengths of the edges before deformation, and let t be the force per unit area. We choose coordinate

axes parallel to the edges as in Fig. 19, which shows the projection on the yz plane. In the general case of anisotropy

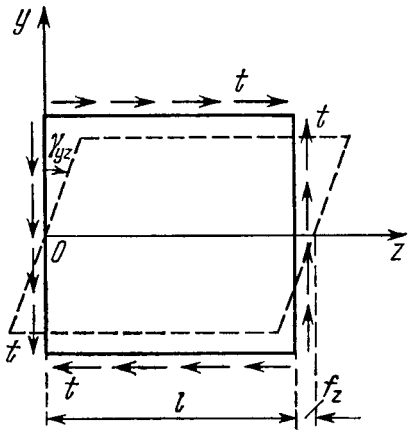

Fig. 19

the stress and strain components are determined by the formulas ([108], pp. 9-10)

$$\tau_{yz} = t, \ \sigma_x = \sigma_y = \sigma_z = \tau_{xz} = \tau_{xy} = 0; \qquad (13.1)$$

$$\left.\begin{aligned} \varepsilon_x &= ta_{14}, \ \gamma_{yz} = ta_{44}, \\ \varepsilon_y &= ta_{24}, \ \gamma_{xz} = ta_{45}, \\ \varepsilon_z &= ta_{34}, \ \gamma_{xy} = ta_{46}, \end{aligned}\right\} \qquad (13.2)$$

Assuming an element of the z axis enclosing the origin to be fixed, we obtain expressions for the displacements satisfying conditions (12.4):

$$\left.\begin{aligned} u &= t\,(a_{14}x + 0.5a_{46}y), \\ v &= t\,(0.5a_{46}x + a_{24}y), \\ w &= t\,(a_{45}x + a_{44}y + a_{34}z). \end{aligned}\right\} \qquad (13.3)$$

In general, all faces and plane sections remain plane, but the angles of all faces distort, so that the body assumes the shape of an oblique parallelepiped. At the same time the distances between the faces also change, i.e., the tangential

forces produce not only the shearing of the faces, but the extensions of the edges as well. The total extension in the z direction is

$$f_z = tla_{34} = tl\frac{\eta_{yz,\,z}}{E_z} = tl\frac{\eta_{z,\,yz}}{G_{yz}}. \tag{13.4}$$

The dilatation θ, i.e., the change in unit volume, depends on the mutual influence coefficients and is determined by the formulas

$$\theta = \varepsilon_x + \varepsilon_y + \varepsilon_z = t\,(a_{14} + a_{24} + a_{34}), \tag{13.5}$$

or

$$\theta = \frac{t}{G_{yz}}\,(\eta_{x,\,yz} + \eta_{y,\,yz} + \eta_{z,\,yz}). \tag{13.6}$$

The change in volume of the whole body $\Delta\omega$ is

$$\Delta\omega = tlbh\,(a_{14} + a_{24} + a_{34}). \tag{13.7}$$

If at each point there is a plane of elastic symmetry normal to the loaded faces (i.e., to the z axis), then $a_{14} = a_{24} = a_{34} = 0$; the tangential forces t produce no extensions in the directions of the edges, and the volume of the body does not change.*

14. Uniform Compression

An elastic homogeneous body bounded by an arbitrary closed surface and having no internal cavities is deformed by normal forces uniformly distributed over the entire surface (Fig. 20).

The body is referred to a system of co-ordinates x, y, z for which the elastic constants from the generalized Hooke's law equations (3.8) or (3.9) are known. In this case ([38], Sec. 281, or [108], pp. 6-8)

$$\sigma_x = \sigma_y = \sigma_z = -p, \qquad \tau_{yz} = \tau_{xz} = \tau_{xy} = 0; \tag{14.1}$$

$$\left.\begin{aligned} \varepsilon_x &= -pS_1, & \gamma_{yz} &= -pS_4, \\ \varepsilon_y &= -pS_2, & \gamma_{xz} &= -pS_5, \\ \varepsilon_z &= -pS_3, & \gamma_{xy} &= -pS_6. \end{aligned}\right\} \tag{14.2}$$

* More precisely, the volume change is a small quantity of higher order in comparison with γ_{yz}, γ_{xz}, γ_{xy}, and is neglected in the linear theory of elasticity.

Here p is the pressure per unit area, and

$$S_k = a_{1k} + a_{2k} + a_{3k} \qquad (k = 1, 2, \ldots, 6). \quad (14.3)$$

The dilatation is

$$\theta = -p\,(S_1 + S_2 + S_3), \quad (14.4)$$

and the change in volume of the whole body is

$$\Delta\omega = -p\omega\,(S_1 + S_2 + S_3), \quad (14.5)$$

where ω is the original volume. Obviously, the volume of the body cannot increase under uniform compression; we

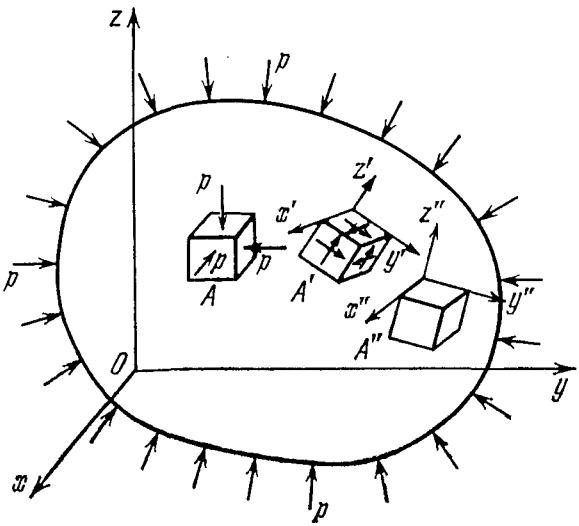

Fig. 20

always have $\Delta\omega \leqslant 0$. The equality sign holds for an absolutely incompressible body. It follows that the elastic constants of every homogeneous anisotropic body satisfy the condition

$$S_1 + S_2 + S_3 \geqslant 0 \quad (14.6)$$

or

$$a_{11} + a_{22} + a_{33} + 2\,(a_{23} + a_{13} + a_{12}) \geqslant 0. \quad (14.7)$$

By expressing a_{ij} in terms of Poisson's ratios and Young's moduli, we obtain, after simple manipulation, a condition that is satisfied by Poisson's ratios referred to an arbitrary system x, y, z ([108], p. 7):

$$\nu_{yz}+\nu_{zx}+\nu_{xy}\leqslant\frac{3}{2}. \tag{14.8}$$

In particular, for an isotropic body we always have $\nu \leqslant 1/2$, the equality sign corresponding everywhere to an absolutely incompressible body.

It follows from formulas (14.1) that on every plane with an arbitrarily directed normal n the shearing stress is zero, and the normal stress is equal in magnitude to the external pressure:

$$\sigma_n = -p, \quad \tau_n = 0. \tag{14.9}$$

Such a distribution of stress, similar to the pressure distribution in a weightless liquid contained in a closed vessel, may be termed hydrostatic.

The distribution of strain in an anisotropic body is more complicated. Formulas (14.2) show that an element in the form of a rectangular parallelepiped isolated from the body is deformed into an oblique parallelepiped. But, as is known, at every point of a continuous medium there are always mutually perpendicular directions such that the angles between these directions do not distort. These directions of the principal strain axes x', y', z' are easily determined if the strain components referred to an arbitrary orthogonal co-ordinate system x, y, z are known.*

We introduce the notation: a'_{ij} = strain coefficients, η' with the appropriate subscripts = mutual influence coefficients, ε'_x, ε'_y, . . ., γ'_{xy}, σ'_x, σ'_y, . . ., τ'_{xy} = strain and stress components referred to the principal axes x', y', z', and

$$S'_k = a'_{1k} + a'_{2k} + a'_{3k} \quad (k = 1, 2, \ldots, 6). \tag{14.10}$$

Since $\gamma'_{yz} = \gamma'_{xz} = \gamma'_{xy} = 0$, it follows that $S'_4 = S'_5 = S'_6 = 0$. This gives us three conditions that must be

* See, for example, the course by L. S. Leibenzon [24], Sec. 6, p. 22.

satisfied by the mutual influence coefficients referred to the principal strain axes:

$$\left.\begin{aligned} \eta'_{x,\,yz} + \eta'_{y,\,yz} + \eta'_{z,\,yz} &= 0, \\ \eta'_{x,\,zx} + \eta'_{y,\,zx} + \eta'_{z,\,zx} &= 0, \\ \eta'_{x,\,xy} + \eta'_{y,\,xy} + \eta'_{z,\,xy} &= 0. \end{aligned}\right\} \tag{14.11}$$

An element A' in the form of a rectangular parallelepiped with edges parallel to the principal strain axes (Fig. 20) remains a rectangular parallelepiped. It is easy to show that it does not change volume under the action of tangential forces t_1, t_2, t_3 applied to the faces. If the element A' is isolated from the body and if, on relieving its faces from pressure, they are loaded by tangential forces, then from the considerations outlined in Sec. 13 the distribution of stress and strain is obtained as

$$\left.\begin{aligned} &\sigma'_x = \sigma'_y = \sigma'_z = 0, \\ &\tau'_{yz} = t_1, \quad \tau'_{xz} = t_2, \quad \tau'_{xy} = t_3; \end{aligned}\right\} \tag{14.12}$$

$$\left.\begin{aligned} \varepsilon'_x &= t_1 a'_{14} + t_2 a'_{15} + t_3 a'_{16}, \\ \varepsilon'_y &= t_1 a'_{24} + t_2 a'_{25} + t_3 a'_{26}, \\ \varepsilon'_z &= t_1 a'_{34} + t_2 a'_{35} + t_3 a'_{36}, \\ \gamma'_{yz} &= t_1 a'_{44} + t_2 a'_{45} + t_3 a'_{46}, \\ \gamma'_{xz} &= t_1 a'_{45} + t_2 a'_{55} + t_3 a'_{56}, \\ \gamma'_{xy} &= t_1 a'_{46} + t_2 a'_{56} + t_3 a'_{66}. \end{aligned}\right\} \tag{14.13}$$

The dilatation is determined by the formula

$$\theta = \varepsilon'_x + \varepsilon'_y + \varepsilon'_z = t_1 S'_4 + t_2 S'_5 + t_3 S'_6 \tag{14.14}$$

and, since S'_4, S'_5, and S'_6 are zero, it follows that $\theta = 0$.

In this connection, let us consider the deformation of an anisotropic body in which the extensions in all directions are the same and the shearing strains are zero, i.e., for a system of co-ordinates x, y, z with arbitrarily directed axes,

$$\varepsilon_x = \varepsilon_y = \varepsilon_z = -\varepsilon, \quad \gamma_{yz} = \gamma_{xz} = \gamma_{xy} = 0. \tag{14.15}$$

In this case the faces of the element A (Fig. 20) are acted on by both the normal and shearing stresses:

$$\left.\begin{aligned} \sigma_x &= -\varepsilon C_1, & \tau_{yz} &= -\varepsilon C_4, \\ \sigma_y &= -\varepsilon C_2, & \tau_{xz} &= -\varepsilon C_5, \\ \sigma_z &= -\varepsilon C_3, & \tau_{xy} &= -\varepsilon C_6, \end{aligned}\right\} \tag{14.16}$$

where

$$C_k = A_{1k} + A_{2k} + A_{3k} \qquad (k = 1, 2, \ldots, 6) \tag{14.17}$$

[see Eqs. (2.5)].

But, as is known, there are always planes on which only normal stresses act (planes normal to the principal stress axes).

Let x'', y'', z'' be the principal stress axes, and let σ''_x, σ''_y, ..., τ''_{xy}, A''_{ij} be the stress components and the elastic constants referred to these axes; also,

$$C''_k = A''_{1k} + A''_{2k} + A''_{3k} \qquad (k = 1, 2, \ldots, 6). \tag{14.18}$$

For this co-ordinate system we have

$$\left.\begin{aligned} \sigma''_x &= -\varepsilon C''_1, & \tau''_{yz} &= 0, \\ \sigma''_y &= -\varepsilon C''_2, & \tau''_{xz} &= 0, \\ \sigma''_z &= -\varepsilon C''_3, & \tau''_{xy} &= 0, \\ & C''_4 = C''_5 = C''_6 = 0. \end{aligned}\right\} \tag{14.19}$$

We come to the following conclusion: in an anisotropic body there are always three mutually perpendicular directions, x'', y'', z'', for which the sums of the following elastic moduli are zero:

$$\left.\begin{aligned} A''_{14} + A''_{24} + A''_{34} &= 0, \\ A''_{15} + A''_{25} + A''_{35} &= 0, \\ A''_{16} + A''_{26} + A''_{36} &= 0. \end{aligned}\right\} \tag{14.20}$$

These directions are determined as the directions of the principal axes of the state of stress in a body subjected to a deformation of the form of (14.15).

15. Bending of a Bar by Moments Applied to Its Ends

A homogeneous bar in the form of a cylinder or a prism of arbitrary section is deformed by forces distributed over the ends and reducing to bending moments acting in the principal plane yz (i.e., in a plane passing through the axis of the bar z and one of the principal axes of inertia y of the cross section; Fig. 21).

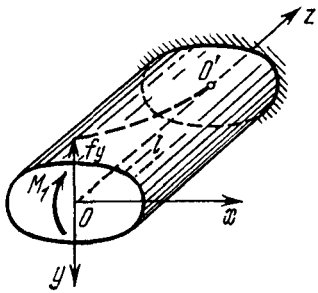

Fig. 21

Denoting by M_1 the magnitude of the bending moment, and by l and I_1 the length of the bar and the moment of inertia of its section with respect to the principal axis x, we obtain the distribution of stress and strain in the case of (rectilinear) anisotropy of the general kind ([38], Sec. 314):

$$\sigma_z = \frac{M_1}{I_1} y, \quad \sigma_x = \sigma_y = \tau_{yz} = \tau_{xz} = \tau_{xy} = 0; \tag{15.1}$$

$$\left.\begin{aligned} \varepsilon_x &= \frac{M_1}{I_1} a_{13} y, & \gamma_{yz} &= \frac{M_1}{I_1} a_{34} y, \\ \varepsilon_y &= \frac{M_1}{I_1} a_{23} y, & \gamma_{xz} &= \frac{M_1}{I_1} a_{35} y, \\ \varepsilon_z &= \frac{M_1}{I_1} a_{33} y, & \gamma_{xy} &= \frac{M_1}{I_1} a_{36} y. \end{aligned}\right\} \tag{15.2}$$

The displacements u, v, w are found from Eqs. (15.2) by integration; the arbitrary constants that will enter into the resulting expressions are determined from the end conditions. Consider two cases.

(1) *Cantilever*. One end of a bar, $z = l$ (see Fig. 21), is fixed, the other, $z = 0$, is free. Assuming that an element on the axis near the clamped section is rigidly fixed, we must satisfy, for $x = y = 0$, $z = l$, the conditions

$$\left.\begin{aligned} &u = v = w = 0, \\ &\frac{\partial u}{\partial z} = \frac{\partial v}{\partial z} = \frac{\partial v}{\partial x} - \frac{\partial u}{\partial y} = 0. \end{aligned}\right\} \tag{15.3}$$

The result is

$$\left.\begin{aligned} u &= \frac{M_1}{2I_1}[2a_{13}xy + a_{36}y^2 - a_{35}y(l-z)], \\ v &= \frac{M_1}{2I_1}[-a_{13}x^2 + a_{23}y^2 - a_{33}(l-z)^2 + a_{35}x(l-z)], \\ w &= \frac{M_1}{2I_1}[a_{35}xy + a_{34}y^2 - 2a_{33}y(l-z)]. \end{aligned}\right\} \quad (15.4)$$

The third formula of (15.4) shows that the cross sections become in general warped during bending, assuming the shape of second-degree surfaces; the warping depends on the coefficients a_{34} and a_{35} (or, what is the same thing, on the mutual influence coefficients $\eta_{yz,\,z}$ and $\eta_{zx,\,z}$). The sections remain plane if $a_{34} = a_{35} = 0$, and this occurs, for example, where there are planes of elastic symmetry normal to the axis. The deflected axis of the bar has the shape of a plane curve (parabola)

$$y' = -\frac{M_1}{2I_1}a_{33}(l-z)^2, \quad (15.5)$$

which can be approximated by a circular arc when the strains are small.

One of the basic equations of the elementary theory of bending relating the curvature of the deflected axis and the bending moment holds for a bar with anisotropy of the most general kind, the only difference being that Young's modulus E, which is the same for all directions in an isotropic beam, is replaced by the modulus E_z for tension-compression in the direction of the axis of the bar:

$$\frac{1}{\rho} = \frac{M_1 a_{33}}{I_1} = \frac{M_1}{E_z I_1}. \quad (15.6)$$

The numerically greatest deflection (at the free end) is

$$f_y = -\frac{M_1 l^2}{2E_z I_1}. \quad (15.7)$$

If the coefficient a_{35} is not zero, the bending is accompanied by twisting; the angle of twist per unit length is

$$\vartheta = \frac{1}{2}\frac{\partial}{\partial z}\left(\frac{\partial v}{\partial x} - \frac{\partial u}{\partial y}\right) = -\frac{M_1}{2I_1}a_{35}. \quad (15.8)$$

(2) *Beam on two supports.* If there are hinged supports at the ends of a bar (Fig. 22), the displacements must satisfy, for $x = y = 0$, $z = 0$ and for $x = y = 0$, $z = l$, the conditions

$$u = v = w = 0. \tag{15.9}$$

These conditions are not sufficient to determine all constants. We require, in addition, that an element of the

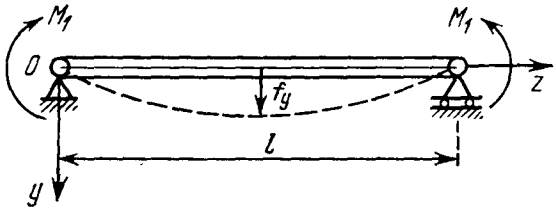

Fig. 22

axis near one of the supports should be prevented from rotating, i.e., we add to conditions (15.9) for $x = y = z = 0$ one more condition:

$$\frac{\partial v}{\partial x} - \frac{\partial u}{\partial y} = 0. \tag{15.10}$$

We then obtain

$$\left.\begin{aligned} u &= \frac{M_1}{2I_1}(2a_{13}xy + a_{36}y^2 + a_{35}yz), \\ v &= \frac{M_1}{2I_1}[-a_{13}x^2 + a_{23}y^2 + a_{33}(lz - z^2) - a_{35}xz], \\ w &= \frac{M_1}{2I_1}[a_{35}xy + a_{34}y^2 + a_{33}y(2z - l)]. \end{aligned}\right\} \tag{15.11}$$

In this case the equation of the deflected axis is

$$y' = \frac{M_1 a_{33}}{2I_1}(lz - z^2), \tag{15.12}$$

and the maximum deflection (at the middle of the span) is

$$f_y = \frac{M_1 l^2}{8E_z I_1}. \tag{15.13}$$

The formulas for the curvature of the deflected axis and for the angle ϑ remain the same, viz. (15.6) and (15.8).

If the moments applied at the ends of the bar act in the other principal plane, xz, the stress distribution is obtained as

$$\sigma_z = \frac{M_2}{I_2} x, \quad \sigma_x = \sigma_y = \tau_{yz} = \tau_{xz} = \tau_{xy} = 0. \tag{15.14}$$

In this case

$$\vartheta = \frac{M_2}{2I_2} a_{34}. \tag{15.15}$$

If the moments M_1 and M_2 act simultaneously, the twist about the axis is given by

$$\vartheta = \frac{1}{2}\left(-\frac{M_1}{I_1} a_{35} + \frac{M_2}{I_2} a_{34} \right). \tag{15.16}$$

It is obviously possible to prevent twisting during bending if the moments are chosen so as to satisfy the condition

$$M_1 a_{35} I_2 = M_2 a_{34} I_1. \tag{15.17}$$

16. Bending of a Rectangular Plate by Moments Distributed Uniformly over Its Sides

A rectangular plate of constant thickness made of homogeneous material with anisotropy of the general kind is deformed by forces distributed over the sides; in each element of the edge having a height equal to the thickness of the plate the forces reduce to bending and twisting moments that do not vary along the length of the side.

Let the middle plane of the plate be taken as the xy plane, with the x and y axes directed along the axes of symmetry of the rectangle (Fig. 23). We introduce the notation: a, b = lengths of the sides, h = thickness, M_1, H = bending and twisting moments on two opposite sides, M_2, H = = moments on the other two sides (per unit length). Assuming that the external forces vary across the thickness of the plate according to a linear law, we obtain the same distribution of stress as in the corresponding isotropic plate (thin slab):

$$\left.\begin{aligned} &\sigma_x = \frac{12M_1}{h^3} z, \quad \sigma_y = \frac{12M_2}{h^3} z, \quad \tau_{xy} = \frac{12H}{h^3} z, \\ &\sigma_z = \tau_{yz} = \tau_{xz} = 0. \end{aligned}\right\} \tag{16.1}$$

The components of strain are found from Eqs. (2.4), and the projections of displacement from these components. Suppose, for definiteness, that an element of the middle

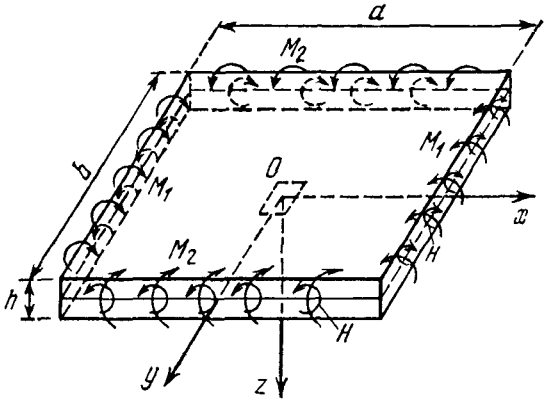

Fig. 23

surface at the centre of the plate is fixed. The conditions for the displacements at $x = y = z = 0$ are then

$$\left.\begin{aligned} u = v = w = 0 \\ \frac{\partial w}{\partial x} = \frac{\partial w}{\partial y} = \frac{\partial v}{\partial x} - \frac{\partial u}{\partial y} = 0. \end{aligned}\right\} \tag{16.2}$$

The displacements are expressed as

$$\left.\begin{aligned} u &= \frac{6}{h^3}[M_1(a_{15}z^2 + a_{16}yz + 2a_{11}xz) + M_2(a_{25}z^2 + \\ &\quad + a_{26}yz + 2a_{12}xz) + H(a_{56}z^2 + a_{66}yz + 2a_{16}xz)], \\ v &= \frac{6}{h^3}[M_1(a_{14}z^2 + 2a_{12}yz + a_{16}xz) + M_2(a_{24}z^2 + \\ &\quad + 2a_{22}yz + a_{26}xz) + H(a_{46}z^2 + 2a_{26}yz + a_{66}xz)], \\ &= \frac{6}{h^3}[M_1(a_{13}z^2 - a_{11}x^2 - a_{12}y^2 - a_{16}xy) + \\ &\quad + M_2(a_{23}z^2 - a_{12}x^2 - a_{22}y^2 - a_{26}xy) + \\ &\quad + H(a_{36}z^2 - a_{16}x^2 - a_{26}y^2 - a_{66}xy)]. \end{aligned}\right\} \tag{16.3}$$

The deflection of the middle surface $W = w(x, y, 0)$ is

$$\left.\begin{aligned} W = -\frac{6}{h^3}\,[M_1(a_{11}x^2+a_{12}y^2+a_{16}xy)+M_2(a_{12}x^2+ \\ +a_{22}y^2+a_{26}xy)+H(a_{16}x^2+a_{26}y^2+a_{66}xy)]. \end{aligned}\right\} \quad (16.4)$$

Formulas (16.3) show that the hypothesis of straight normals is not, in general, true. Straight segments, normal to the middle plane before deformation, become curved during deformation, as evidenced by the terms with z^2 in the expressions for u and v; the curvatures depend on the strain coefficients a_{14}, a_{24}, a_{15}, a_{25}, a_{46}, and a_{56}, and vanish if these elastic constants are zero (and this occurs, for example, in the case when there are planes of elastic symmetry parallel to the middle plane).

Nevertheless, the formulas of the approximate theory of the bending of thin plates based on the hypothesis of straight normals hold for a plate with general anisotropy bent by uniformly distributed moments, namely

$$\left.\begin{aligned} M_x &= -\left(D_{11}\frac{\partial^2 W}{\partial x^2}+D_{12}\frac{\partial^2 W}{\partial y^2}+2D_{16}\frac{\partial^2 W}{\partial x\,\partial y}\right), \\ M_y &= -\left(D_{12}\frac{\partial^2 W}{\partial x^2}+D_{22}\frac{\partial^2 W}{\partial y^2}+2D_{26}\frac{\partial^2 W}{\partial x\,\partial y}\right), \\ H_{xy} &= -\left(D_{16}\frac{\partial^2 W}{\partial x^2}+D_{26}\frac{\partial^2 W}{\partial y^2}+2D_{66}\frac{\partial^2 W}{\partial x\,\partial y}\right). \end{aligned}\right\} \quad (16.5)$$

Here M_x, M_y, H_{xy} are the bending and twisting moments inside the plate acting on linear elements of the middle surface parallel to the x and y axes (in the present case $M_x = M_1$, $M_y = M_2$, $H_{xy} = H$), and D_{ij} are the rigidities of the anisotropic plate determined by the formulas ([27], Sec. 38)

$$D_{ij} = \left(A_{ij} - \frac{A_{i3}A_{j3}}{A_{33}}\right)\frac{h^3}{12} \qquad (i, j = 1, 2, 6) \qquad (16.6)$$

In the special case when a plate is orthotropic ($a_{16} = a_{26} = 0$), is loaded only by bending moments ($H = 0$),

and supported at the corners, the deflection of its middle surface is

$$W=\frac{6}{h^3}\left[(M_1a_{11}+M_2a_{12})\left(\frac{a^2}{4}-x^2\right)+\right.$$
$$\left.+(M_1a_{12}+M_2a_{22})\left(\frac{b^2}{4}-y^2\right)\right]. \qquad (16.7)$$

The maximum deflection (at the centre) is determined by the formula

$$f=\frac{3}{2h^3}\left[(M_1a_{11}+M_2a_{12})\,a^2+(M_1a_{12}+M_2a_{22})\,b^2\right], \qquad (16.8)$$

or alternatively

$$f=\frac{3}{2h^3}\left(M_1\frac{a^2-\nu_{12}b^2}{E_1}+M_2\frac{b^2-\nu_{21}a^2}{E_2}\right). \qquad (16.9)$$

17. Extension and Bending of a Bar Having Cylindrical Anisotropy

Consider a bar in the form of a cylinder or a prism of arbitrary section made of an elastic material with cylindrical anisotropy. Suppose that the axis of anisotropy is parallel to the axis of the bar and passes inside the bar, or outside, or along its surface. Let the bar be extended by an axial force and its own weight (Fig. 17) or deformed by moments applied at the ends (Fig. 21).

To find the distribution of stress and strain, it is necessary to determine six components of stress and three projections of displacement satisfying the fundamental system of equilibrium equations for an elastic body and the boundary conditions. In the present case it is most convenient to use cylindrical co-ordinates taking the axis of anisotropy as the z axis; the fundamental system then becomes

$$\left.\begin{aligned}
&\frac{\partial\sigma_r}{\partial r}+\frac{1}{r}\frac{\partial\tau_{r\theta}}{\partial\theta}+\frac{\partial\tau_{rz}}{\partial z}+\frac{\sigma_r-\sigma_\theta}{r}+R=0,\\
&\dots\dots\dots\dots\dots\dots\dots\dots\\
&\varepsilon_r=a_{11}\sigma_r+a_{12}\sigma_\theta+\dots+a_{16}\tau_{r\theta},\\
&\varepsilon_\theta=a_{12}\sigma_r+a_{22}\sigma_\theta+\dots+a_{26}\tau_{r\theta},\\
&\dots\dots\dots\dots\dots\dots\dots\dots\\
&\gamma_{r\theta}=a_{16}\sigma_r+a_{26}\sigma_\theta+\dots+a_{66}\tau_{r\theta},
\end{aligned}\right\} \qquad (17.1)$$

where a_{ij} are the elastic constants, and ε_r, ε_θ, . . ., $\gamma_{r\theta}$ are related to the projections of displacement u_r, u_θ, w by Eqs. (1.3).

It is natural to inquire whether the distributions of stress in an extended or a bent bar with cylindrical anisotropy are identical with the simple distributions obtained in a homogeneous anisotropic or isotropic bar. This question must in general be answered in the negative.

Let us consider the case of extension by an axial force P neglecting the weight of the bar itself (Fig. 17). In a bar with rectilinear anisotropy or in an isotropic bar an elementary stress distribution will result:

$$\sigma_z = \frac{P}{S}, \quad \sigma_r = \sigma_\theta = \tau_{\theta z} = \tau_{rz} = \tau_{r\theta} = 0 \tag{17.2}$$

(S is the cross-sectional area). The equilibrium equations and the boundary conditions are obviously satisfied, and the displacements u_r, u_θ, w must be determined from the generalized Hooke's law equations. Finding the displacements from these stresses by integrating the last six equations of system (17.1), we ascertain that this can be done only when the constant a_{34} is zero; if, however, $a_{34} \neq 0$, the equations are incompatible. But suppose that the compatibility condition $a_{34} = 0$ is fulfilled. We then obtain

$$\left.\begin{aligned} u_r &= \frac{P}{S} a_{13} r + (\omega_2 \cos\theta - \omega_1 \sin\theta) z + \\ &\qquad + v_0 \sin\theta + u_0 \cos\theta, \\ u_\theta &= \frac{P}{S} [(a_{23} - a_{13}) r\theta + a_{36} r \ln r] - \\ &- (\omega_2 \sin\theta + \omega_1 \cos\theta) z + v_0 \cos\theta - u_0 \sin\theta + \omega_3 r, \\ w &= \frac{P}{S} (a_{35} r + a_{33} z) + (\omega_1 \sin\theta - \omega_2 \cos\theta) r + w_0. \end{aligned}\right\} \tag{17.3}$$

Here ω_1, ω_2, ω_3, u_0, v_0, w_0 are constants expressing rigid-body displacements.

The displacement u_θ contains a term proportional to the angle θ. This means that it is a multiple-valued function of position if $a_{13} \neq a_{23}$ and the axis of anisotropy passes inside the body (through the body or in a cavity) since u_θ receives an increment $P 2\pi r (a_{23} - a_{13})/S$ on passing once

round a closed contour surrounding the axis of anisotropy. There is no multiple valuedness if $a_{13} = a_{23}$ or the axis of anisotopy passes outside the body or along its surface since then it cannot be surrounded by a closed contour lying entirely inside the bar. The multiple-valuedness of displacements indicates an unsuitability of solution (17.2): the displacements must always be single-valued functions of position.

We thus come to the following conclusion. The elementary distribution of stress (17.2) can be obtained in a bar with cylindrical anisotropy in only two special cases: (1) the axis of anisotropy passes outside the bar or along a generator of the lateral surface and $a_{34} = 0$; (2) the axis of anisotropy passes inside the bar and the elastic constants satisfy the conditions

$$a_{34} = 0, \quad a_{13} = a_{23}. \tag{17.4}$$

The second of these conditions may be formulated as follows: Poisson's ratios characterizing the compression in the radial and tangential directions r and θ under tension in the axial direction z must be equal.

If a bar having cylindrical anisotropy is extended under its own weight, the elementary distribution of stress (11.9) occurs only when the elastic constants satisfy the conditions

$$a_{34} = a_{35} = a_{36} = 0, \quad a_{13} = a_{23}, \tag{17.5}$$

no matter where the axis of anisotropy passes since (17.5) are the compatibility conditions for the system of equations determining the displacements.

This is also true for the bending of a bar by moments M_1 and M_2. The stress distribution in a bar with cylindrical anisotropy will be the same as in a homogeneous anisotropic or isotropic bar only if conditions (17.5) are fulfilled (again, no matter where the axis of anisotropy passes).

The discussion of the elastic equilibrium of bars with more general cylindrical anisotropy will be taken up in Chap. 5 of this book.

ELASTIC EQUILIBRIUM OF A BODY BOUNDED BY A CYLINDRICAL SURFACE IN WHICH THE STRESSES DO NOT VARY ALONG THE GENERATORS

Chapter 3

This chapter is concerned with the general problem indicated in the heading for a homogeneous body with general anisotropy, rectilinear or cylindrical [Eqs. (3.8) or (10.2), where a_{ij} are constants]. The following chapters, 4 to 6, deal with problems that are special cases of the general problem of generalized plane strain, plane strain, generalized plane stress, and related problems of the generalized and pure torsion of cylindrical and prismatic bodies.

18. Stress Distribution in a Homogeneous Body with Rectilinear Anisotropy Dependent on Only Two Co-ordinates

We state the problem as follows. A homogeneous body bounded by a cylindrical surface (or planes) with the most general anisotropy is in elastic equilibrium under the action of forces distributed over its surface and body forces. The region of the cross section may be finite or infinite, simply connected or multiply connected; the length of the body may be finite or infinite. It is assumed that the forces distributed over the lateral surface and the body forces act in planes normal to the generators and do not vary along the length. In addition the ends of a cylinder of finite length or a semi-infinite cylinder are acted on by forces reducing to bending moments, twisting moments, and axial (longitudinal) forces; initial stresses are absent.*

Let the body be referred to a Cartesian system of co-ordinates x, y, z in which the z axis is parallel to the genera-

* By "initial" stresses are meant the stresses that may be in a body in the absence of external forces or thermal effects.

tors, and the xy plane is consequently coincident with the plane of any one cross section (for example, of the end section); the x and y axes are directed as appears most convenient considering the shape of the section.

If the region of the section is finite, it is convenient to place the origin at the centroid and take the x and y axes coincident with the principal axes of inertia of the section.

Suppose that the body follows the generalized Hooke's law expressed by Eqs. (3.8) in which the strain coefficients a_{ij} are not, in general, all zero. The strains are small.

Let the projections of the forces distributed over the lateral surface (per unit area) be denoted by X_n, Y_n, where n is the normal to the lateral surface. The projections of the body forces (per unit volume) are denoted by X, Y, assuming that they have a potential $\bar{U}(x, y)$, i.e.,

$$X = -\frac{\partial \bar{U}}{\partial x}, \quad Y = -\frac{\partial \bar{U}}{\partial y}. \tag{18.1}$$

The last restriction is not essential, but it simplifies the derivations involved. The force and the moments to which the forces acting at the ends reduce are denoted by P_z, M_1, M_2, M_t (axial force, bending moments, twisting moment; Fig. 24).

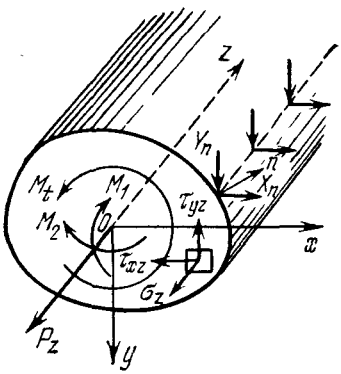

Fig. 24

It appears obvious that the components of stress in the given body loaded as indicated are functions of only two co-ordinates, x, y. We propose to derive the general equations determining the states of stress and strain, and the conditions on the lateral surface and at the ends. This problem was first stated for a homogeneous body by C. Somigliana in [122]. It received further development in the author's book [26] from which we take (with slight modifications) Secs. 17-21 (pp. 87-105 of the book); see also [77].

The fundamental system of equilibrium equations for the given elastic body is of the form

$$\left.\begin{aligned} &\frac{\partial}{\partial x}(\sigma_x - \bar{U}) + \frac{\partial \tau_{xy}}{\partial y} = 0, \\ &\frac{\partial \tau_{xy}}{\partial x} + \frac{\partial}{\partial y}(\sigma_y - \bar{U}) = 0, \\ &\frac{\partial \tau_{xz}}{\partial x} + \frac{\partial \tau_{yz}}{\partial y} = 0; \end{aligned}\right\} \tag{18.2}$$

$$\left.\begin{aligned} \varepsilon_x &= a_{11}\sigma_x + a_{12}\sigma_y + \ldots + a_{16}\tau_{xy}, \\ \varepsilon_y &= a_{12}\sigma_x + a_{22}\sigma_y + \ldots + a_{26}\tau_{xy}, \\ &\ldots\ldots\ldots\ldots\ldots\ldots \\ \gamma_{xy} &= a_{16}\sigma_x + a_{26}\sigma_y + \ldots + a_{66}\tau_{xy}. \end{aligned}\right\} \tag{18.3}$$

We introduce the notation:

$$D = a_{13}\sigma_x + a_{23}\sigma_y + a_{33}\sigma_z + a_{34}\tau_{yz} + \\ + a_{35}\tau_{xz} + a_{36}\tau_{xy}. \tag{18.4}$$

From this

$$\sigma_z = \frac{D}{a_{33}} - \frac{1}{a_{33}}(a_{13}\sigma_x + a_{23}\sigma_y + a_{34}\tau_{yz} + a_{35}\tau_{xz} + a_{36}\tau_{xy}). \tag{18.5}$$

Equations (18.3) are rewritten as

$$\left.\begin{aligned} \frac{\partial u}{\partial x} &= \beta_{11}\sigma_x + \beta_{12}\sigma_y + \ldots + \beta_{16}\tau_{xy} + \frac{a_{13}}{a_{33}}D, \\ \frac{\partial v}{\partial y} &= \beta_{12}\sigma_x + \beta_{22}\sigma_y + \ldots + \beta_{26}\tau_{xy} + \frac{a_{23}}{a_{33}}D, \\ \frac{\partial w}{\partial z} &= D, \\ \frac{\partial v}{\partial z} + \frac{\partial w}{\partial y} &= \beta_{14}\sigma_x + \beta_{24}\sigma_y + \ldots + \beta_{46}\tau_{xy} + \frac{a_{34}}{a_{33}}D, \\ \frac{\partial w}{\partial x} + \frac{\partial u}{\partial z} &= \beta_{15}\sigma_x + \beta_{25}\sigma_y + \ldots + \beta_{56}\tau_{xy} + \frac{a_{35}}{a_{33}}D, \\ \frac{\partial u}{\partial y} + \frac{\partial v}{\partial x} &= \beta_{16}\sigma_x + \beta_{26}\sigma_y + \ldots + \beta_{66}\tau_{xy} + \frac{a_{36}}{a_{33}}D. \end{aligned}\right\} \tag{18.6}$$

The displacements are determined from these equations by integration; here and henceforth we shall adhere to a definite order: we first integrate the third, fourth, and fifth equations and then require that the resulting displacements containing undetermined functions of integration $U_1(x, y)$, $V_1(x, y)$, and $W_1(x, y)$ should satisfy the remaining equations of (18.6), namely the first, second, and sixth equations. By integrating the third, fourth, and fifth equations, we find

$$\left.\begin{aligned} w &= zD + W_1(x, y), \\ v &= -\frac{z^2}{2}\frac{\partial D}{\partial y} + z\left(\beta_{14}\sigma_x + \beta_{24}\sigma_y + \ldots + \beta_{46}\tau_{xy} - \right. \\ &\qquad\qquad \left. - \frac{\partial W_1}{\partial y}\right) + V_1(x, y), \\ u &= -\frac{z^2}{2}\frac{\partial D}{\partial x} + z\left(\beta_{15}\sigma_x + \beta_{25}\sigma_y + \ldots + \beta_{56}\tau_{xy} - \right. \\ &\qquad\qquad \left. - \frac{\partial W_1}{\partial x}\right) + U_1(x, y). \end{aligned}\right\} \tag{18.7}$$

We introduce into consideration rigid-body displacements, i.e., linear functions of position expressing displacements of the body as a whole (displacements involving no strain):

$$\left.\begin{aligned} u' &= \omega_2 z - \omega_3 y + u_0, \\ v' &= \omega_3 x - \omega_1 z + v_0, \\ w' &= \omega_1 y - \omega_2 x + w_0, \end{aligned}\right\} \tag{18.8}$$

where ω_1, ω_2, ω_3 (arbitrary constants) are the components of rotation of the body about three co-ordinate axes, x, y, z; u_0, v_0, w_0 (arbitrary constants) are the translations along the axes.

We further introduce new functions U, V, W instead of U_1, V_1, W_1 by setting

$$\left.\begin{aligned} U_1 &= U - \omega_3 y + u_0, \\ V_1 &= V + \omega_3 x + v_0, \\ W_1 &= W + \omega_1 y - \omega_2 x + w_0. \end{aligned}\right\} \tag{18.9}$$

Substituting expressions (18.7) in the left-hand sides of the first, second, and sixth equations of (18.6), and equating the coefficients of z^2, z and the free terms on the left-hand

and right-hand sides, we obtain three equations for D and two systems of equations for W and U, V:

$$\frac{\partial^2 D}{\partial x^2}=\frac{\partial^2 D}{\partial y^2}=\frac{\partial^2 D}{\partial x\,\partial y}=0; \tag{18.10}$$

$$\left.\begin{aligned}
&\frac{\partial}{\partial x}\left(\beta_{15}\sigma_x+\beta_{25}\sigma_y+\ldots+\beta_{56}\tau_{xy}+\right.\\
&\qquad\qquad\left.+\frac{a_{35}}{a_{33}}D-\frac{\partial W}{\partial x}\right)=0,\\
&\frac{\partial}{\partial y}\left(\beta_{14}\sigma_x+\beta_{24}\sigma_y+\ldots+\beta_{46}\tau_{xy}+\right.\\
&\qquad\qquad\left.+\frac{a_{34}}{a_{33}}D-\frac{\partial W}{\partial y}\right)=0,\\
&\frac{\partial}{\partial y}\left(\beta_{15}\sigma_x+\beta_{25}\sigma_y+\ldots+\beta_{56}\tau_{xy}+\frac{a_{35}}{a_{33}}D-\frac{\partial W}{\partial x}\right)+\\
&\quad+\frac{\partial}{\partial x}\left(\beta_{14}\sigma_x+\beta_{24}\sigma_y+\ldots+\beta_{46}\tau_{xy}+\right.\\
&\qquad\qquad\left.+\frac{a_{34}}{a_{33}}D-\frac{\partial W}{\partial y}\right)=0;
\end{aligned}\right\} \tag{18.11}$$

$$\left.\begin{aligned}
\frac{\partial U}{\partial x}&=\beta_{11}\sigma_x+\beta_{12}\sigma_y+\ldots+\beta_{16}\tau_{xy}+\frac{a_{13}}{a_{33}}D,\\
\frac{\partial V}{\partial y}&=\beta_{12}\sigma_x+\beta_{22}\sigma_y+\ldots+\beta_{26}\tau_{xy}+\frac{a_{23}}{a_{33}}D,\\
\frac{\partial U}{\partial y}+\frac{\partial V}{\partial x}&=\beta_{16}\sigma_x+\beta_{26}\sigma_y+\ldots+\beta_{66}\tau_{xy}+\frac{a_{36}}{a_{33}}D.
\end{aligned}\right\} \tag{18.12}$$

It follows from (18.10) that D is a linear function of x and y with arbitrary coefficients A, B, C:

$$D = Ax + By + C, \tag{18.13}$$

and hence the normal stress at cross sections is [see (18.5)]

$$\begin{aligned}
\sigma_z=&\frac{1}{a_{33}}(Ax+By+C)-\\
&-\frac{1}{a_{33}}(a_{13}\sigma_x+a_{23}\sigma_y+a_{34}\tau_{yz}+a_{35}\tau_{xz}+a_{36}\tau_{xy}).
\end{aligned} \tag{18.14}$$

By integrating the first two equations of (18.11), and satisfying the third equation, we obtain equations for W:

$$\left.\begin{aligned}\frac{\partial W}{\partial x}&=\beta_{15}\sigma_x+\beta_{25}\sigma_y+\ldots+\beta_{56}\tau_{xy}+\\&\qquad+\frac{a_{35}}{a_{33}}D+\vartheta y-\omega_2,\\\frac{\partial W}{\partial y}&=\beta_{14}\sigma_x+\beta_{24}\sigma_y+\ldots+\beta_{46}\tau_{xy}+\\&\qquad+\frac{a_{34}}{a_{33}}D-\vartheta x+\omega_1.\end{aligned}\right\}\tag{18.15}$$

Here

$$\beta_{ij}=a_{ij}-\frac{a_{i3}a_{j3}}{a_{33}}\qquad(i,\ j=1,\ 2,\ 4,\ 5,\ 6)\tag{18.16}$$

are quantities called the reduced strain coefficients [77]. By eliminating U, V, and W from (18.12) and (18.15) (by differentiation, addition, and subtraction), we obtain two equations for σ and τ:

$$\begin{aligned}&\frac{\partial^2}{\partial y^2}(\beta_{11}\sigma_x+\beta_{12}\sigma_y+\ldots+\beta_{16}\tau_{xy})+\\&\qquad+\frac{\partial^2}{\partial x^2}(\beta_{12}\sigma_x+\beta_{22}\sigma_y+\ldots+\beta_{26}\tau_{xy})-\\&\qquad-\frac{\partial^2}{\partial x\,\partial y}(\beta_{16}\sigma_x+\beta_{26}\sigma_y+\ldots+\beta_{66}\tau_{xy})=0;\end{aligned}\tag{18.17}$$

$$\begin{aligned}&\frac{\partial}{\partial y}(\beta_{15}\sigma_x+\beta_{25}\sigma_y+\ldots+\beta_{56}\tau_{xy})-\\&\qquad-\frac{\partial}{\partial x}(\beta_{14}\sigma_x+\beta_{24}\sigma_y+\ldots+\beta_{46}\tau_{xy})=\\&\qquad\qquad=-2\vartheta+\frac{Aa_{34}-Ba_{35}}{a_{33}}.\end{aligned}\tag{18.18}$$

The final expressions for the displacements are written as

$$\left.\begin{aligned}u&=-\frac{A}{2}z^2-\vartheta yz+U(x,\ y)+u',\\v&=-\frac{B}{2}z^2+\vartheta xz+V(x,\ y)+v',\\w&=(Ax+By+C)z+W(x,\ y)+w'.\end{aligned}\right\}\tag{18.19}$$

These expressions contain altogether 10 constants. Formulas (18.19) show that the terms with the factor ϑ are equal

to the corresponding terms of the displacements in simple torsion ([28], p. 39); u', v', w' are the rigid-body displacements (18.7).

The constants A, B, C, ϑ are found from the equilibrium conditions at the ends (or at a cross section for a bar of infinite length). The constants entering into the rigid-body displacements are determined from the end conditions. Note that there must be exactly six of these conditions, and not more or less. Consequently, we cannot solve the problem by this method if the ends are fixed in an arbitrary manner. In the case of a finite section we assume that the centroid of the section and an infinitesimal plane element enclosing it or an element of the axis passing through the centroid are rigidly fixed. To solve the problem when the ends are arbitrarily fixed, a more rigorous approach (or method) is needed which will not be discussed here.

19. Stress Functions

The stress components can be expressed in terms of two functions, $F(x, y)$, $\psi(x, y)$, of two variables, x, y, so that the equilibrium equations for a continuous medium (1.6) or (18.2) are satisfied identically. Assume

$$\left.\begin{aligned} \sigma_x = \frac{\partial^2 F}{\partial y^2} + \bar{U}, \quad \sigma_y = \frac{\partial^2 F}{\partial x^2} + \bar{U}, \quad \tau_{xy} = -\frac{\partial^2 F}{\partial x\, \partial y}, \\ \tau_{xz} = \frac{\partial \psi}{\partial y}, \quad \tau_{yz} = -\frac{\partial \psi}{\partial x}. \end{aligned}\right\} \tag{19.1}$$

The sixth component, σ_z, is determined from formula (18.14). Further we take two equations, (18.17) and (18.18), and express the stresses in terms of F and ψ (stress functions). We obtain a system of two equations for the stress functions, which can be written in compact form as

$$\left.\begin{aligned} L_4 F + L_3 \psi = &-(\beta_{12} + \beta_{22}) \frac{\partial^2 \bar{U}}{\partial x^2} + \\ &+ (\beta_{16} + \beta_{26}) \frac{\partial^2 \bar{U}}{\partial x\, \partial y} - (\beta_{11} + \beta_{12}) \frac{\partial^2 \bar{U}}{\partial y^2}, \\ L_3 F + L_2 \psi = &-2\vartheta + \frac{A a_{34} - B a_{35}}{a_{33}} + \\ &+ (\beta_{14} + \beta_{24}) \frac{\partial \bar{U}}{\partial x} - (\beta_{15} + \beta_{25}) \frac{\partial \bar{U}}{\partial y}. \end{aligned}\right\} \tag{19.2}$$

Here L_4, L_3, L_2 are differential operators of the fourth, third, and second orders of the form

$$\left.\begin{aligned} L_4 &= \beta_{22}\frac{\partial^4}{\partial x^4} - 2\beta_{26}\frac{\partial^4}{\partial x^3\,\partial y} + (2\beta_{12}+\beta_{66})\frac{\partial^4}{\partial x^2\,\partial y^2} - \\ &\qquad - 2\beta_{16}\frac{\partial^4}{\partial x\,\partial y^3} + \beta_{11}\frac{\partial^4}{\partial y^4}, \\ L_3 &= -\beta_{24}\frac{\partial^3}{\partial x^3} + (\beta_{25}+\beta_{46})\frac{\partial^3}{\partial x^2\,\partial y} - \\ &\qquad - (\beta_{14}+\beta_{56})\frac{\partial^3}{\partial x\,\partial y^2} + \beta_{15}\frac{\partial^3}{\partial y^3}, \\ L_2 &= \beta_{44}\frac{\partial^2}{\partial x^2} - 2\beta_{45}\frac{\partial^2}{\partial x\,\partial y} + \beta_{55}\frac{\partial^2}{\partial y^2}. \end{aligned}\right\} \tag{19.3}$$

The stresses and displacements corresponding to the stress functions F and ψ must be continuous and single valued within the body. The boundary conditions must be satisfied on the lateral (cylindrical) surface. If external forces $Z_n = 0$, X_n, Y_n are prescribed there as functions of position on the contour of the section (the first fundamental problem), the surface conditions, or, what is the same thing, the conditions on the contour of the cross section are of the form

$$\left.\begin{aligned} \sigma_x \cos(n, x) + \tau_{xy}\cos(n, y) &= X_n, \\ \tau_{xy}\cos(n, x) + \sigma_y \cos(n, y) &= Y_n, \\ \tau_{xz}\cos(n, x) + \tau_{yz}\cos(n, y) &= 0. \end{aligned}\right\} \tag{19.4}$$

Here n is the outward normal to the contour of the cross section whose equation may conveniently be written in parametric form, namely $x = x(s)$, $y = y(s)$. The parameter s is often taken to be the arc length of the contour measured from a certain starting point in the positive direction. The positive direction for the measurement of arcs is chosen so that the contour (both the outer and the inner contour, i.e., the contour of a cutout in the case of a multiply connected region) is described counterclockwise. For the outer contour of the region of the section we then have

$$\cos(n, x) = \frac{dy}{ds}, \quad \cos(n, y) = -\frac{dx}{ds} \tag{19.5}$$

and for the inner contour*

$$\cos(n, x) = -\frac{dy}{ds}, \quad \cos(n, y) = \frac{dx}{ds}. \tag{19.6}$$

On integrating (19.4) with respect to the arc length of the contour from the starting point O to a variable point s, we rewrite conditions (19.4) as

$$\left.\begin{aligned} \frac{\partial F}{\partial x} &= \int_0^s \left(\mp Y_n - \bar{U}\frac{dx}{ds}\right) ds + c_1, \\ \frac{\partial F}{\partial y} &= \int_0^s \left(\pm X_n - \bar{U}\frac{dy}{ds}\right) ds + c_2, \\ \psi &= c_3. \end{aligned}\right\} \tag{19.7}$$

The upper signs are to be taken for the outer contour, and the lower signs for the inner contour. The constants c_1, c_2, c_3 may be fixed arbitrarily on either of the contours bounding the section; in particular, for a finite simply connected region we have to take $c_i = 0$.

If projections of displacement u^*, v^*, w^* are prescribed on the lateral surface (contour of the section) (the second fundamental problem), we have there the conditions

$$u = u^*(s), \; v = v^*(s), \; w = w^*(s). \tag{19.8}$$

The conditions at the ends or at the cross section, where the forces reducing to the resultant P_z and to the bending and twisting moments are acting, are initially written as

$$\left.\begin{aligned} &\iint \tau_{xz}\, dx\, dy = 0, && \iint \sigma_z y\, dx\, dy = M_1, \\ &\iint \tau_{yz}\, dx\, dy = 0, && \iint \sigma_z x\, dx\, dy = M_2, \\ &\iint \sigma_z\, dx\, dy = P_z, && \iint (\tau_{yz}x - \tau_{xz}y)\, dx\, dy = M_t. \end{aligned}\right\} \tag{19.9}$$

---

* N. I. Muskhelishvili ([32], p. 140) takes for the positive sense of description of a contour that which leaves the region on the left.

Here and henceforth (Chaps. 3 to 7) the double integrals are taken over the region of the cross section of a cylindrical body.

The force P_z and the moments M_1, M_2, M_t may either be given or have to be determined (reactive), depending on the end conditions.

If there are planes of elastic symmetry normal to the z axis in the body, then

$$a_{34} = a_{35} = 0, \quad \beta_{14} = \beta_{15} = \beta_{24} = \beta_{25} = \beta_{46} = \beta_{56} = 0,$$

and system (19.2) falls into two independent equations: one for F, and the other for ψ.

Accordingly the problem falls into a plane strain problem and a torsion problem, which are to be solved independently. The plane problem and torsion will be discussed in greater detail in Chaps. 4 to 6.

Let us consider the case when the region of the cross section is finite and simply connected. We place the origin at the centroid of the cross section, with the x and y axes directed along the principal axes of inertia. Let us transform the end conditions (19.9).

To begin with, we ascertain that the first two conditions of (19.9) are satisfied identically.

We have

$$\left.\begin{aligned} &\iint \tau_{xz}\, dx\, dy = \iint \frac{d\psi}{\partial y}\, dx\, dy = \int_\gamma \psi \cos(n,\ y)\, ds = 0, \\ &\iint \tau_{yz}\, dx\, dy = -\iint \frac{\partial\psi}{\partial x}\, dx\, dy = \\ &\qquad\qquad = -\int_\gamma \psi \cos(n,\ x)\, dx = 0. \end{aligned}\right\} \quad (19.10)$$

(the single integral is taken along the entire contour γ of the section). These integrals are identically zero since $\psi =$ $=$ constant on the contour. The remaining four conditions of (19.9) contain altogether 17 integrals of stresses and stresses multiplied by linear functions (x and y). It may be

verified that two more integrals are zero, and two integrals are expressed in terms of the twisting moment M_t. We have

$$\iint \tau_{xz} x\, dx\, dy = \iint \left[\tau_{xz} x + \frac{x^2}{2}\left(\frac{\partial \tau_{xz}}{\partial x} + \frac{\partial \tau_{yz}}{\partial y}\right)\right] dx\, dy =$$

$$= \iint \left[\frac{\partial}{\partial x}\left(\frac{x^2}{2}\tau_{xz}\right) + \frac{\partial}{\partial y}\left(\frac{x^2}{2}\tau_{yz}\right)\right] dx\, dy =$$

$$= \int_\gamma \frac{x^2}{2}\left[\tau_{xz}\cos(n, x) + \tau_{yz}\cos(n, y)\right] ds = 0. \quad (19.11)$$

Similarly

$$\iint \tau_{yz} y\, dx\, dy = 0. \quad (19.12)$$

The end conditions take the form

$$\left.\begin{aligned} CS - \iint (a_{13}\sigma_x + a_{23}\sigma_y + a_{36}\tau_{xy})\, dx\, dy &= P_z a_{33}, \\ BI_1 - \iint (a_{13}\sigma_x + a_{23}\sigma_y + a_{35}\tau_{xz} + a_{36}\tau_{xy})\, y\, dx\, dy &= \\ &= M_1 a_{33}, \\ AI_2 - \iint (a_{13}\sigma_x + a_{23}\sigma_y + a_{34}\tau_{yz} + a_{36}\tau_{xy})\, x\, dx\, dy &= \\ &= M_2 a_{33}, \end{aligned}\right\} \quad (19.13)$$

$$\iint (\tau_{yz} x - \tau_{xz} y)\, dx\, dy = M_t. \quad (19.14)$$

Here S is the cross-sectional area, I_1, I_2 are its principal moments of inertia (with respect to the x and y axes).

The integrals of stresses over the cross-sectional area and of stresses multiplied by x or y can be expressed in terms of the given quantities, viz. the surface and body forces. To make this transformation, we insert under the integral signs expressions equal to zero, namely the left-hand sides of the equilibrium equations for a continuous medium (18.2) or the left-hand sides of the equations multiplied by powers or products of x and y. Next the double integrals are transformed into integrals along the contour γ of the cross section, taking into account the boundary conditions (19.4). In the present cases we shall not introduce into consideration a potential for body forces since it is more convenient to denote the body forces simply by X, Y. Leaving out the

transformations involved, we state only the final results:*

$$\left.\begin{aligned}
&\iint \sigma_x\,dx\,dy = \int_\gamma xX_n\,ds + \iint xX\,dx\,dy,\\
&\iint \sigma_y\,dx\,dy = \int_\gamma yY_n\,ds + \iint yY\,dx\,dy,\\
&\iint \tau_{xy}\,dx\,dy = \int_\gamma xY_n\,ds + \iint xY\,dx\,dy =\\
&\qquad\qquad = \int_\gamma yX_n\,ds + \iint yX\,dx\,dy,\\
&\iint \tau_{xz}\,dx\,dy = 0, \quad \iint \tau_{yz}\,dx\,dy = 0;
\end{aligned}\right\} \tag{19.15}$$

$$\left.\begin{aligned}
&\iint \sigma_x y\,dx\,dy = \int_\gamma (xyX_n - 0.5x^2Y_n)\,ds +\\
&\qquad\qquad + \iint (xyX - 0.5x^2Y)\,dx\,dy,\\
&\iint \sigma_y y\,dx\,dy = 0.5\int_\gamma y^2Y_n\,ds + 0.5\iint y^2Y\,dx\,dy,\\
&\iint \tau_{xy} y\,dx\,dy = 0.5\int_\gamma y^2X_n\,ds + 0.5\iint y^2X\,dx\,dy,\\
&\iint \tau_{yz} y\,dx\,dy = 0, \quad \iint \tau_{xz} y\,dx\,dy = -0.5M_t;
\end{aligned}\right\} \tag{19.16}$$

$$\left.\begin{aligned}
&\iint \sigma_x x\,dx\,dy = 0.5\int_\gamma x^2X_n\,ds + 0.5\iint x^2X\,dx\,dy,\\
&\iint \sigma_y x\,dx\,dy = \int_\gamma (xyY_n - 0.5y^2X_n)\,ds +\\
&\qquad\qquad + \iint (xyY - 0.5y^2X)\,dx\,dy,\\
&\iint \tau_{xy} x\,dx\,dy = 0.5\int_\gamma x^2Y_n\,ds + 0.5\iint x^2Y\,dx\,dy,\\
&\iint \tau_{yz} x\,dx\,dy = 0.5M_t, \quad \iint \tau_{xz} x\,dx\,dy = 0.
\end{aligned}\right\} \tag{19.17}$$

* The same integrals but in the absence of body forces and with no forces applied to the lateral surface are given by Voigt ([38], Sec. 306) who was mainly interested in torsion and bending problems.

In the end conditions we can transform to the projections of surface and body forces, and instead of (19.13), (19.14) we then obtain

$$CS - \int_{\gamma} [(a_{13}x + a_{36}y) X_n + a_{23}y Y_n] \, ds -$$

$$- \iint [(a_{13}x + a_{36}y) X + a_{23}y Y] \, dx \, dy = P_z a_{33}; \quad (19.18)$$

$$BI_1 - \int_{\gamma} [(a_{13}xy + 0.5a_{36}y^2) X_n + 0.5 (a_{23}y^2 - a_{13}x^2) Y_n] \, ds -$$

$$- \iint [(a_{13}xy + 0.5a_{36}y^2) X + 0.5 (a_{23}y^2 - a_{13}x^2) Y] \, dx \, dy +$$

$$+ 0.5a_{35}M_t = M_1 a_{33}; \quad (19.19)$$

$$AI_2 - \int_{\gamma} [0.5 (a_{13}x^2 - a_{23}y^2) X_n + (a_{23}xy + 0.5a_{36}x^2) Y_n] \, ds -$$

$$- \iint [0.5 (a_{13}x^2 - a_{23}y^2) X + (a_{23}xy + 0.5a_{36}x^2) Y] \, dx \, dy -$$

$$- 0.5a_{34}M_t = M_2 a_{33}. \quad (19.20)$$

Equations (19.18) to (19.20) uniquely determine the coefficients A, B, C entering into formula (18.14) for the stress σ_z. The constant ϑ is found from the last (sixth) condition of (19.9). For a simply connected finite region this condition is easily simplified by expressing the integral on the left-hand side of the sixth equation of (19.9) and transforming it. We have

$$\iint (\tau_{yz}x - \tau_{xz}y) \, dx \, dy = - \iint \left[\frac{\partial}{\partial x} (x\psi) + \frac{\partial}{\partial y} (y\psi) \right] dx \, dy +$$

$$+ 2 \iint \psi \, dx \, dy. \quad (19.21)$$

By transforming the double integral into an integral along the contour where it is permissible to take $\psi = 0$, we obtain an equation for determining ϑ:

$$2 \iint \psi \, dx \, dy = M_t. \quad (19.22)$$

20. General Expressions for Stress Functions in a Homogeneous Rectilinearly Anisotropic Body

The general solution of the system of equations (19.2) may be written as

$$F = F_1 + F_0, \quad \psi = \psi_1 + \psi_0. \tag{20.1}$$

Here F_1, ψ_1 are the general solution of the homogeneous system

$$\left.\begin{aligned} L_4F_1 + L_3\psi_1 &= 0, \\ L_3F_1 + L_2\psi_1 &= 0, \end{aligned}\right\} \tag{20.2}$$

and F_0, ψ_0 are a particular solution of the non-homogeneous system (19.2). A particular solution depends on the right-hand sides of the non-homogeneous equations, and if these right-hand sides are simple (for example, are composed of elementary functions), the particular solutions are usually not difficult to obtain.

To obtain the general solution of the homogeneous system, we eliminate either of the functions, say ψ_1, from it. We then obtain a sixth-order equation for the remaining function:

$$(L_4L_2 - L_3^2)\, F_1 = 0. \tag{20.3}$$

A similar equation is obtained for the other function. The operator of the sixth order $L_4L_2 - L_3^2$ can be decomposed into six linear operators of the first order D_k, and Eq. (20.3) is represented as

$$D_6D_5D_4D_3D_2D_1F_1 = 0. \tag{20.4}$$

Here

$$D_k = \frac{\partial}{\partial y} - \mu_k \frac{\partial}{\partial x}, \tag{20.5}$$

and μ_k are the roots of the sixth-degree algebraic (characteristic) equation corresponding to the differential equation (20.3):

$$l_4(\mu)\, l_2(\mu) - l_3^2(\mu) = 0, \tag{20.6}$$

where we have used the notation:

$$\left.\begin{aligned} l_4(\mu) &= \beta_{11}\mu^4 - 2\beta_{16}\mu^3 + (2\beta_{12} + \beta_{66})\mu^2 - \\ &\qquad - 2\beta_{26}\mu + \beta_{22}, \\ l_3(\mu) &= \beta_{15}\mu^3 - (\beta_{14} + \beta_{56})\mu^2 + (\beta_{25} + \beta_{46})\mu - \beta_{24}, \\ l_2(\mu) &= \beta_{55}\mu^2 - 2\beta_{45}\mu + \beta_{44}. \end{aligned}\right\} \tag{20.7}$$

The integration of the sixth-order linear equation can be reduced to a successive integration of six first-order equations. Suppose that there are no multiple roots among μ_k. Denote:

$$\left.\begin{aligned} D_1F_1 = \varphi_2, \quad D_2\varphi_2 = \varphi_3, \quad D_3\varphi_3 = \varphi_4, \\ D_4\varphi_4 = \varphi_5, \quad D_5\varphi_5 = \varphi_6. \end{aligned}\right\} \tag{20.8}$$

The function φ_6 satisfies the equation

$$D_6\varphi_6 = 0; \tag{20.9}$$

its general integral is equal to an arbitrary function of the argument $x + \mu_6 y$, which, for convenience, we designate as the fifth-order derivative of some function $f_6(x + \mu_6 y)$:

$$\varphi_6 = f_6^{\mathrm{V}}(x + \mu_6 y). \tag{20.10}$$

The function φ_5 satisfies the non-homogeneous equation

$$D_5\varphi_5 = f_6^{\mathrm{V}}(x + \mu_6 y), \tag{20.11}$$

which is easily integrated. The result is

$$\varphi_5 = f_5^{\mathrm{IV}}(x + \mu_5 y) + \frac{f_6^{\mathrm{IV}}(x + \mu_6 y)}{\mu_6 - \mu_5}. \tag{20.12}$$

In this way we determine successively φ_4, φ_3, φ_2, and finally F_1 from (20.8). By changing the notation for the arbitrary functions, we obtain the general expressions for F_1 and ψ_1:

$$F_1 = \sum_{k=1}^{6} F_{1k}(x + \mu_k y), \quad \psi_1 = \sum_{k=1}^{6} \psi_{1k}(x + \mu_k y). \tag{20.13}$$

The functions F_{1k} and ψ_{1k} satisfy not only Eq. (20.3), but also the system of equations (20.2). It follows that there

must be a relationship among them, which is easily established in an elementary way. The resulting expression is

$$\psi_{1k}(x+\mu_k y) = \\ = -\frac{l_3(\mu_k)}{l_2(\mu_k)} F'_{1k}(x+\mu_k y) + a_k(x+\mu_k y) + b_k. \quad (20.14)$$

Here a_k, b_k are arbitrary constants; a prime denotes the derivative with respect to the whole argument $x + \mu_k y$.

This method of solution obviously fails if some of the roots are equal. But in this case, too, the finding presents no great difficulty, and we shall not elaborate upon this point.

The general expression for the stress function F can also be obtained in a somewhat different way. A particular solution of Eq. (20.3) is sought in the form

$$F_1 = f(x + \mu y). \quad (20.15)$$

Substituting in (20.3), and cancelling out f^{VI} (since the equation contains the sixth-order derivatives only), we obtain an algebraic equation of the sixth degree in μ having six roots. If none of the roots are multiple, the general expression for F_1 is obtained in the form of a sum of six functions $f_k(x + \mu_k y)$ $(k = 1, 2, \ldots, 6)$. When there are multiple roots, the problem becomes somewhat more complicated, but even in the case of roots of any multiplicity the solution can easily be found.

Next we draw on four theorems, very important to the whole theory of the equilibrium of a body bounded by a cylindrical surface ([77], pp. 351-353 and [26], Sec. 19). In the proof we proceed from two basic propositions: (1) any six real numbers can be taken as the values of the stress components at a given point of an elastic anisotropic body; (2) the strain energy $\overline{V}$ per unit volume is positive for all values of the stress components (real and not all zero simultaneously).

Theorem 1. *The equation $l_4(\mu) = 0$ cannot have real roots.*

A homogeneous body with general anisotropy obviously undergoes elastic strains and is in stable equilibrium if none of the components of stress exceed in absolute value some number $\varepsilon > 0$.

We assign the stresses at a given point:

$$\left.\begin{aligned} &\sigma_x = \frac{k^2}{N}, \quad \sigma_y = \frac{1}{N}, \\ &\sigma_z = -\frac{1}{a_{33}N}(a_{13}k^2 + a_{23} - a_{36}k), \\ &\tau_{yz} = \tau_{xz} = 0, \quad \tau_{xy} = -\frac{k}{N}, \end{aligned}\right\} \tag{20.16}$$

where k and N are real numbers; at this point we then have

$$\overline{V} = \frac{1}{2N^2} l_4(k). \tag{20.17}$$

By assigning to k all possible real values, we select N each time so that all the components of stress are numerically less than ε. For all values of the stresses assigned in this way $\overline{V} > 0$, and hence $l_4(k) > 0$ for real k; consequently, the equation $l_4(\mu) = 0$ has no real roots.

Theorem 2. *The equation $l_2(\mu) = 0$ cannot have real roots.*

The proof is carried out in a similar way. By assigning the values of the stresses

$$\left.\begin{aligned} &\sigma_x = \sigma_y = \tau_{xy} = 0, \\ &\sigma_z = \frac{1}{a_{33}N}(a_{34} - a_{35}k), \\ &\tau_{yz} = -\frac{1}{N}, \quad \tau_{xz} = \frac{k}{N}, \end{aligned}\right\} \tag{20.18}$$

we have

$$\overline{V} = \frac{1}{2N^2} l_2(k) > 0, \tag{20.19}$$

and hence $l_2(k) > 0$ for all real k.

Theorem 3. *The equation $l_4(\mu)\, l_2(\mu) - l_3^2(\mu) = 0$ cannot have real roots.*

To prove this theorem, we assign the stresses at a point as follows:

$$\left.\begin{aligned} &\sigma_x = \frac{k^2}{N}, \quad \sigma_y = \frac{1}{N}, \quad \tau_{xy} = -\frac{k}{N}, \\ &\sigma_z = -\frac{1}{a_{33}N}(a_{13}k^2 + a_{23} - a_{36}k - a_{34}\lambda + a_{35}\lambda k), \\ &\tau_{yz} = -\frac{\lambda}{N}, \quad \tau_{xz} = \frac{\lambda k}{N}, \end{aligned}\right\} \tag{20.20}$$

where $\lambda = -l_3(k)/l_2(k)$ is a finite quantity, and in particular zero.

We obtain an expression for the elastic potential at the point:

$$\overline{V} = \frac{1}{2N^2} \frac{l_4(k)\, l_2(k) - l_3^2(k)}{l_2(k)} > 0, \tag{20.21}$$

and the theorem is thus proved.

Theorem 4. *The equation*

$$a_{11}\mu^4 - 2a_{16}\mu^3 + (2a_{12} + a_{66})\,\mu^2 - 2a_{26}\mu + a_{22} = 0 \tag{20.22}$$

cannot have real roots.

The theorem is proved in the same way as Theorem 1, but in the present case we must set

$$\left.\begin{aligned} \sigma_x = \frac{k^2}{N}, \quad \sigma_y = \frac{1}{N}, \quad \tau_{xy} = -\frac{k}{N}, \\ \sigma_z = \tau_{yz} = \tau_{xz} = 0. \end{aligned}\right\} \tag{20.23}$$

For clarity we note that in the proof of all of the four theorems the cases when the free terms in the equations are zero are excluded from the consideration a priori. These are special cases, which are of no great interest to us, though.

It is quite evident that if β_{22}, β_{44}, a_{22} or the constant term in the more complicated equation $l_4 l_2 - l_3^2 = 0$ are zero, the corresponding theorems cease to be valid since one root of the equation is necessarily real, viz. zero. But then each of the equations becomes an equation of odd degree, and hence has at least one more real root, and altogether not less than two.

The equations

$$\mathscr{L}_4(\mu) = 0, \quad \mathscr{L}_2(\mu) = 0, \quad \mathscr{L}_4(\mu)\,\mathscr{L}_2(\mu) - \mathscr{L}_3^2(\mu) = 0 \tag{20.24}$$

and the equation corresponding to (20.22) whose left-hand sides are constructed in the same way as those of the equations considered above, the only difference being that the coefficients a_{ij} are replaced by the moduli A_{ij}, cannot have real roots either, except in special cases. This statement need not be proved, but follows immediately from the

generalized Hooke's law equations according to which a_{ij} are uniquely expressed in terms of A_{ij}, and vice versa.

On the basis of Theorem 3 we can state that μ_k are always complex or pure imaginary numbers, three of them being the conjugates to the other three. We shall refer to μ_k as the *complex parameters* of the given problem and designate them as follows:

$$\left.\begin{aligned} &\mu_1=\alpha_1+i\beta_1, \quad \mu_2=\alpha_2+i\beta_2, \quad \mu_3=\alpha_3+i\beta_3, \\ &\bar{\mu}_1=\alpha_1-i\beta_1, \quad \bar{\mu}_2=\alpha_2-i\beta_2, \quad \bar{\mu}_3=\alpha_3-i\beta_3 \end{aligned}\right\} \tag{20.25}$$

(here $i=\sqrt{-1}$; β_k will always be assumed positive). Further we introduce the following notation and names:

$z_k = x + \mu_k y$ = complicated or generalized complex variables ($k = 1, 2, 3$);

$\bar{z}_k = x + \bar{\mu}_k y$ = conjugate complicated or generalized complex variables;

$$\lambda_1=-\frac{l_3(\mu_1)}{l_2(\mu_1)}, \quad \lambda_2=-\frac{l_3(\mu_2)}{l_2(\mu_2)}, \quad \lambda_3=-\frac{l_3(\mu_3)}{l_4(\mu_3)}. \tag{20.26}$$

Let the symbol Re, as usual, denote the real part of a complex expression. We can write down general expressions for the stress functions, which will involve the real parts of three functions of the complicated complex variables:

$$\left.\begin{aligned} &F=2\,\mathrm{Re}\,[F_{11}(z_1)+F_{12}(z_2)+F_{13}(z_3)]+F_0, \\ &\psi=2\,\mathrm{Re}\left[\lambda_1F'_{11}(z_1)+\lambda_2F'_{12}(z_2)+\frac{1}{\lambda_3}F'_{13}(z_3)\right]+\psi_0 \end{aligned}\right\} \tag{20.27}$$

(a prime denotes the first-order derivatives with respect to z_k).

21. General Formulas for Stress Components and Projections of Displacement. Boundary Conditions

We now introduce new functions of the complicated or generalized complex variables z_k:

$$\Phi_k(z_k)=F'_{1k}(z_k) \quad (k=1,\ 2); \quad \Phi_3(z_3)=\frac{1}{\lambda_3}F'_{13}(z_3); \tag{21.1}$$

the derivatives of $\Phi_k(z_k)$ with respect to z_k will be denoted by $\Phi'_k(z_k)$.

With the help of these new functions, which will be termed *complex potentials*, the expressions for the first derivatives of F with respect to x and y and for ψ can be written as

$$\left.\begin{aligned}\frac{\partial F}{\partial x} &= 2\,\mathrm{Re}\,[\Phi_1(z_1)+\Phi_2(z_2)+\lambda_3\Phi_3(z_3)]+\frac{\partial F_0}{\partial x},\\ \frac{\partial F}{\partial y} &= 2\,\mathrm{Re}\,[\mu_1\Phi_1+\mu_2\Phi_2+\mu_3\lambda_3\Phi_3]+\frac{\partial F_0}{\partial y},\\ \psi &= 2\,\mathrm{Re}\,[\lambda_1\Phi_1+\lambda_2\Phi_2+\Phi_3]+\psi_0.\end{aligned}\right\} \tag{21.2}$$

From formulas (19.1), with (21.2), we obtain the general expressions for the stress components:

$$\left.\begin{aligned}\sigma_x &= 2\,\mathrm{Re}\,[\mu_1^2\Phi_1'(z_1)+\mu_2^2\Phi_2'(z_2)+\mu_3^2\lambda_3\Phi_3'(z_3)]+\\ &\qquad+\frac{\partial^2 F_0}{\partial y^2}+\overline{U},\\ \sigma_y &= 2\,\mathrm{Re}\,[\Phi_1'+\Phi_2'+\lambda_3\Phi_3']+\frac{\partial^2 F_0}{\partial x^2}+\overline{U},\\ \tau_{xy} &= -2\,\mathrm{Re}\,[\mu_1\Phi_1'+\mu_2\Phi_2'+\mu_3\lambda_3\Phi_3']-\frac{\partial^2 F_0}{\partial x\,\partial y},\\ \tau_{yz} &= -2\,\mathrm{Re}\,[\lambda_1\Phi_1'+\lambda_2\Phi_2'+\Phi_3']-\frac{\partial\psi_0}{\partial x},\\ \tau_{xz} &= 2\,\mathrm{Re}\,[\mu_1\lambda_1\Phi_1'+\mu_2\lambda_2\Phi_2'+\mu_3\Phi_3']+\frac{\partial\psi_0}{\partial y};\end{aligned}\right\} \tag{21.3}$$

$$\sigma_z=\frac{1}{a_{33}}(Ax+By+C)-\frac{1}{a_{33}}(a_{13}\sigma_x+a_{23}\sigma_y+ \\ +a_{34}\tau_{yz}+a_{35}\tau_{xz}+a_{36}\tau_{xy}). \tag{21.4}$$

Substituting (21.3) in Eqs. (18.12) and (18.15), we obtain, upon integration ([77], pp. 354-355),

$$\left.\begin{aligned}U &= 2\,\mathrm{Re}\sum_{k=1}^{3} p_k\Phi_k(z_k)+U_0,\\ V &= 2\,\mathrm{Re}\sum_{k=1}^{3} q_k\Phi_k(z_k)+V_0,\\ W &= 2\,\mathrm{Re}\sum_{k=1}^{3} r_k\Phi_k(z_k)+W_0.\end{aligned}\right\} \tag{21.5}$$

Here we have used the notation:

$$\left.\begin{aligned} p_k &= \beta_{11}\mu_k^2 + \beta_{12} - \beta_{16}\mu_k + \lambda_k(\beta_{15}\mu_k - \beta_{14}), \\ q_k &= \beta_{12}\mu_k + \frac{\beta_{22}}{\mu_k} - \beta_{26} + \lambda_k\left(\beta_{25} - \frac{\beta_{24}}{\mu_k}\right), \\ r_k &= \beta_{14}\mu_k + \frac{\beta_{24}}{\mu_k} - \beta_{46} + \lambda_k\left(\beta_{45} - \frac{\beta_{44}}{\mu_k}\right) \\ &\qquad (k = 1,\ 2); \end{aligned}\right\} \tag{21.6}$$

$$\left.\begin{aligned} p_3 &= \lambda_3(\beta_{11}\mu_3^2 + \beta_{12} - \beta_{16}\mu_3) + \beta_{15}\mu_3 - \beta_{14}, \\ q_3 &= \lambda_3\left(\beta_{12}\mu_3 + \frac{\beta_{22}}{\mu_3} - \beta_{26}\right) + \beta_{25} - \frac{\beta_{24}}{\mu_3}, \\ r_3 &= \lambda_3\left(\beta_{14}\mu_3 + \frac{\beta_{24}}{\mu_3} - \beta_{46}\right) + \beta_{45} - \frac{\beta_{44}}{\mu_3}; \end{aligned}\right\} \tag{21.7}$$

U_0, V_0, W_0 are the solutions of Eqs. (18.12) and (18.15), corresponding to the functions F_0, ψ_0, $\overline{U}$ and to the linear functions $Ax + By + C$, ϑx, ϑy, which contain the constants A, B, C, ϑ.

In the case of the first fundamental problem when forces X_n, Y_n are given, the boundary conditions or the conditions on the contour of the cross section take the form

$$\left.\begin{aligned} 2\,\mathrm{Re}\,[\Phi_1 + \Phi_2 + \lambda_3\Phi_3] &= f_1(s) - \frac{\partial F_0}{\partial x} + c_1, \\ 2\,\mathrm{Re}\,[\mu_1\Phi_1 + \mu_2\Phi_2 + \mu_3\lambda_3\Phi_3] &= f_2(s) - \frac{\partial F_0}{\partial y} + c_2, \\ 2\,\mathrm{Re}\,[\lambda_1\Phi_1 + \lambda_2\Phi_2 + \Phi_3] &= -\psi_0 + c_3, \end{aligned}\right\} \tag{21.8}$$

where

$$\left.\begin{aligned} f_1(s) &= \int_0^s \left(\mp Y_n - \overline{U}\frac{dx}{ds}\right) ds, \\ f_2(s) &= \int_0^s \left(\pm X_n - \overline{U}\frac{dy}{ds}\right) ds, \end{aligned}\right\} \tag{21.9}$$

and c_1, c_2, c_3 are constants, which may be fixed arbitrarily on either of the contours bounding the region of the cross section; the upper signs refer to the outer contour, and the

lower signs to the contour of the hole (cutout). In the case of the second fundamental problem when displacements are prescribed on the cylindrical surface, namely

$$\left.\begin{aligned} u^* &= az^2 - \vartheta^* yz + U^*(s) + \alpha z, \\ v^* &= bz^2 + \vartheta^* xz + V^*(s) + \beta z, \\ w^* &= -2(ax + by + c)z + W^*(s), \end{aligned}\right\} \tag{21.10}$$

the boundary conditions are obtained in the form

$$\left.\begin{aligned} 2\,\mathrm{Re}\sum_{k=1}^{3} p_k\Phi_k &= -U_0 + U^* + \omega_3 y - u_0, \\ 2\,\mathrm{Re}\sum_{k=1}^{3} q_k\Phi_k &= -V_0 + V^* - \omega_3 x - v_0, \\ 2\,\mathrm{Re}\sum_{k=1}^{3} r_k\Phi_k &= -W_0 + W^* - w_0, \end{aligned}\right\} \tag{21.11}$$

with

$$\left.\begin{aligned} &A = -2a, \quad B = -2b, \quad C = -2c; \\ &\vartheta = \vartheta^*, \quad \omega_1 = -\beta, \quad \omega_2 = a. \end{aligned}\right\} \tag{21.12}$$

The present problem of the equilibrium of a body bounded by a cylindrical surface is reduced to that of determining the complex potentials, i.e., three functions $\Phi_k(z_k)$ of three different complex variables $z_k = x + \mu_k y$ in the regions S of the cross section. These functions must be such that the stresses and displacements defined by them are single-valued functions of the co-ordinates x and y and continuous up to the contour. On the contour of the region Φ_k must satisfy conditions (21.8) or (21.10) (the first and second fundamental problems). In other words, three combinations of Φ_k and of the conjugate functions are given on the contour.

The functions Φ_k may be regarded from a different point of view, namely as functions of the ordinary complex variables $z_k = x_k + iy_k$, where

$$x_k = x + \alpha_k y, \quad y_k = \beta_k y \quad (k = 1, 2, 3). \tag{21.13}$$

But if this standpoint is taken, the complex potentials Φ_1, Φ_2, Φ_3 must be determined, not in the region S of the cross section, but in regions S_1, S_2, S_3 obtained from S by

the affine transformation (21.13). Figure 25 shows how the regions S_k ($k = 1, 2, 3$) are obtained from S.

The points A_1, A_2, A_3 (z_1, z_2, z_3) on the contours of the regions S_1, S_2, S_3 must be affine-corresponding in relation to the given point A of the contour S defined by the arc s.

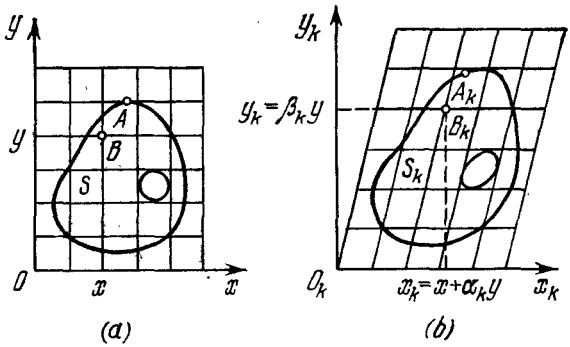

Fig. 25

These features of the mathematical aspect of the elasticity problem under consideration add to the difficulties of its exact efficient solution. Only for certain few regions S_k was it possible to carry the solution through, i.e., to exact formulas determining the functions Φ_k or F and ψ explicitly and permitting a calculation of the stresses and displacements. For the great majority of regions, so far we have to be content with an approximate solution using one or another of the approximate methods.

22. Stress Distribution in a Continuously Non-homogeneous, Rectilinearly Anisotropic Body Dependent on Two Co-ordinates

Consider a continuously non-homogeneous body of infinite or finite length bounded by a cylindrical surface or planes and acted on by surface and body forces normal to the generators and constant along the length as in Sec. 18 (Fig. 24). Let the coefficients a_{ij} be continuous, single-valued, and differentiable functions of the co-ordinates

x and y and constant along the length. The forces at the ends of a body of finite length reduce to longitudinal forces and bending and twisting moments. It is obvious that in the case of a non-homogeneous body such as this the stresses are also independent of z.

The fundamental system of equilibrium equations for such a body is of the form of (18.2), (18.3), but a_{ij} are not constants in these equations, but functions (continuous, differentiable) of the variables x and y. In this section we shall derive equations for a continuously non-homogeneous, rectilinearly anisotropic body having, at each point, a plane of elastic symmetry normal to the generators (13 independent coefficients a_{ij} [15]).

The procedure for the derivation of the general equations for a non-homogeneous body is exactly the same as that for a homogeneous body, and hence we may omit all intermediate computations and give only the final formulas and equations. These are as follows:

(1) The expressions for displacements are identical in form with those for a homogeneous body, namely

$$\left.\begin{aligned} u &= -\frac{A}{2}z^2 - \vartheta yz + U(x, y) + u', \\ v &= -\frac{B}{2}z^2 + \vartheta xz + V(x, y) + v', \\ w &= (Ax + By + C)z + W(x, y) + w', \end{aligned}\right\} \tag{22.1}$$

where u', v', w' are the rigid-body displacements (18.8).

(2) The functions U, V, W satisfy the equations

$$\left.\begin{aligned} \frac{\partial U}{\partial x} &= \beta_{11}\sigma_x + \beta_{12}\sigma_y + \beta_{16}\tau_{xy} + \\ &\quad + \frac{a_{13}}{a_{33}}(Ax + By + C), \\ \frac{\partial V}{\partial y} &= \beta_{12}\sigma_x + \beta_{22}\sigma_y + \beta_{26}\tau_{xy} + \\ &\quad + \frac{a_{23}}{a_{33}}(Ax + By + C), \\ \frac{\partial U}{\partial y} + \frac{\partial V}{\partial x} &= \beta_{16}\sigma_x + \beta_{26}\sigma_y + \beta_{66}\tau_{xy} + \\ &\quad + \frac{a_{36}}{a_{33}}(Ax + By + C); \end{aligned}\right\} \tag{22.2}$$

$$\left.\begin{aligned}\frac{\partial W}{\partial x}&=a_{45}\tau_{yz}+a_{55}\tau_{xz}+\vartheta y,\\ \frac{\partial W}{\partial y}&=a_{44}\tau_{yz}+a_{45}\tau_{xz}-\vartheta x,\end{aligned}\right\}\tag{22.3}$$

where

$$\left.\begin{aligned}&\beta_{ij}=a_{ij}-\frac{a_{i3}a_{j3}}{a_{33}}\qquad (i,\ j=1,\ 2,\ 6),\\ &\beta_{44}=a_{44},\quad \beta_{45}=a_{55},\qquad \beta_{55}=a_{55}\end{aligned}\right\}\tag{22.4}$$

are functions of x and y.

(3) The stress components are expressed in terms of two stress functions (as in a homogeneous body):

$$\left.\begin{aligned}&\sigma_x=\frac{\partial^2 F}{\partial y^2}+\overline{U},\quad \sigma_y=\frac{\partial^2 F}{\partial x^2}+\overline{U},\quad \tau_{xy}=-\frac{\partial^2 F}{\partial x\,\partial y},\\ &\tau_{xz}=\frac{\partial\psi}{\partial y},\quad \tau_{yz}=-\frac{\partial\psi}{\partial x}\end{aligned}\right\}\tag{22.5}$$

($\overline{U}$ is the body force potential);

$$\sigma_z=\frac{1}{a_{33}}(Ax+By+C)-\frac{1}{a_{33}}(a_{13}\sigma_x+a_{23}\sigma_y+a_{36}\tau_{xy}).\tag{22.6}$$

(4) The functions F and ψ satisfy two equations (each function satisfies its particular equation):

$$\begin{aligned}&\frac{\partial^2}{\partial x^2}\left(\beta_{22}\frac{\partial^2 F}{\partial x^2}+\beta_{12}\frac{\partial^2 F}{\partial y^2}-\beta_{26}\frac{\partial^2 F}{\partial x\,\partial y}\right)+\\ &\quad+\frac{\partial^2}{\partial y^2}\left(\beta_{12}\frac{\partial^2 F}{\partial x^2}+\beta_{11}\frac{\partial^2 F}{\partial y^2}-\beta_{16}\frac{\partial^2 F}{\partial x\,\partial y}\right)-\\ &\quad-\frac{\partial^2}{\partial x\,\partial y}\left(\beta_{26}\frac{\partial^2 F}{\partial x^2}+\beta_{16}\frac{\partial^2 F}{\partial y^2}-\beta_{66}\frac{\partial^2 F}{\partial x\,\partial y}\right)=\\ &=-\frac{\partial^2}{\partial x^2}\left[\frac{a_{22}}{a_{33}}(Ax+By+C)\right]-\frac{\partial^2}{\partial y^2}\left[\frac{a_{13}}{a_{33}}(Ax+By+C)\right]+\\ &\quad+\frac{\partial^2}{\partial x\,\partial y}\left[\frac{a_{36}}{a_{33}}(Ax+By+C)\right]-\frac{\partial^2}{\partial x^2}[(\beta_{12}+\beta_{22})\overline{U}]-\\ &\quad-\frac{\partial^2}{\partial y^2}[(\beta_{11}+\beta_{12})\overline{U}]+\frac{\partial^2}{\partial x\,\partial y}[(\beta_{16}+\beta_{26})\overline{U}];\end{aligned}\tag{22.7}$$

$$\frac{\partial}{\partial x}\left(a_{44}\frac{\partial\psi}{\partial x}-a_{45}\frac{\partial\psi}{\partial y}\right)+\frac{\partial}{\partial y}\left(-a_{45}\frac{\partial\psi}{\partial x}+a_{55}\frac{\partial\psi}{\partial y}\right)=-2\vartheta;\tag{22.8}$$

(5) The functions F and ψ satisfy conditions (19.7) when forces are prescribed. If displacements are prescribed, conditions (19.8) must be fulfilled. The constants A, B, C, ϑ are determined from the end conditions (19.9).

The boundary conditions in the case of the first fundamental problem are, formally, no different from those for F and ψ for a homogeneous body. The end conditions are also identical with those for a homogeneous body (19.9). In the present case of the anisotropy of a non-homogeneous body the stated problem, as in the case of a homogeneous body having at least one plane of elastic symmetry, falls into two independent problems: (1) the determination of four stresses, σ_x, σ_y, τ_{xy}, σ_z (from the function F); (2) the determination of two stresses, τ_{yz}, τ_{xz} (from the function ψ).

23. Stress Distribution in a Homogeneous Body Having Cylindrical Anisotropy Dependent on Two Co-ordinates, r, θ

Consider, now, the elastic equilibrium of a homogeneous body having general cylindrical anisotropy. It is assumed that the body is bounded by a cylindrical surface and end planes or is infinite or semi-infinite; related to the body is a straight line g, the axis of anisotropy, parallel to the generators, passing outside the body or inside a cavity (if any), or passing through the body or along its surface.* If g is chosen as the z axis of a cylindrical co-ordinate system and the x axis from which the polar angles θ are measured is taken parallel to one of the principal axes of inertia, the generalized Hooke's law equations are written in the form of (10.2), where a_{ij} are constants. Let O' denote the centroid of the end and consider a second co-ordinate system x', y', z' with the z' axis parallel to g and the x' and y' axes coincident with the principal axes of inertia. The body is acted on by surface forces, distributed over the cylindrical surface and normal to the axis of anisotropy, and body forces; both

* In the latter two cases it is well to recall what has been said in Sec. 10 about the equality of some of the strain coefficients a_{ij} and other elastic constants, and take this into account in the derivation of the general equations. In this section we shall always refer to a body with a finite region of the cross section.

these forces are constant along the generator (i.e, along the length). In addition the forces distributed over the ends reduce to an axial force P_z, bending moments with components M_1, M_2 with respect to the axes x', y', and a twisting moment M_t (Fig. 26).

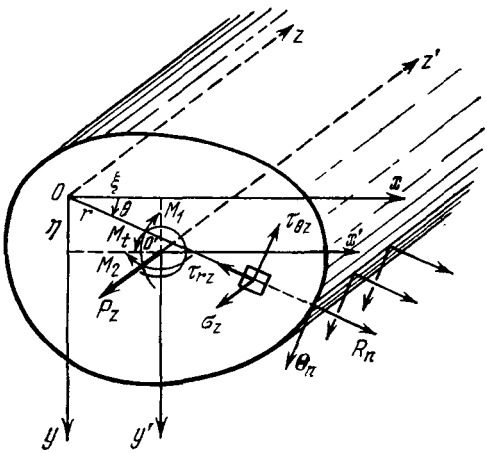

Fig. 26

Let the projections of the external surface forces be denoted by R_n, Θ_n ($Z_n = 0$) and the projections of the body forces by R, Θ ($Z = 0$). Suppose that the body forces have a potential $\overline{U}(r, \theta)$, i.e.,

$$\left.\begin{aligned} R &= -\frac{\partial \overline{U}}{\partial r}, \\ \Theta &= -\frac{1}{r}\frac{\partial \overline{U}}{\partial \theta}. \end{aligned}\right\} \tag{23.1}$$

We have to determine nine unknown functions in the region of the body, namely six components of stress, σ_z, σ_θ, ..., $\tau_{r\theta}$, and three projections of displacement, u_r, u_θ, w. We have just nine independent equations for these functions. As in the case of a body with rectilinear anisotropy, the fundamental system is composed of three equilibrium equations for a continuous medium and six equations

expressing the generalized Hookes's law; we write down some of these equations:

$$\left.\begin{aligned}\frac{\partial(\sigma_r-\overline{U})}{\partial r}+\frac{1}{r}\frac{\partial\tau_{r\theta}}{\partial\theta}+\frac{\sigma_r-\sigma_\theta}{r}&=0,\\ \frac{\partial\tau_{r\theta}}{\partial r}+\frac{1}{r}\frac{\partial(\sigma_\theta-\overline{U})}{\partial\theta}+\frac{2\tau_{r\theta}}{r}&=0,\\ \frac{\partial\tau_{rz}}{\partial r}+\frac{1}{r}\frac{\partial\tau_{\theta z}}{\partial\theta}+\frac{\tau_{rz}}{r}&=0;\end{aligned}\right\}\tag{23.2}$$

$$\left.\begin{aligned}\varepsilon_r&=a_{11}\sigma_r+a_{12}\sigma_\theta+\ldots+a_{16}\tau_{r\theta},\\ \varepsilon_\theta&=a_{12}\sigma_r+a_{22}\sigma_\theta+\ldots+a_{26}\tau_{r\theta},\\ &\ldots\ldots\ldots\ldots\ldots\ldots\\ \gamma_{r\theta}&=a_{16}\sigma_r+a_{26}\sigma_\theta+\ldots+a_{66}\tau_{r\theta}.\end{aligned}\right\}\tag{23.3}$$

The general equations for the given problem are derived in the same way as for a body with rectilinear anisotropy, except that the starting equations are altered to suit the particular kind of anisotropy and the final results are different. To begin with, we introduce the notation:

$$D=a_{13}\sigma_r+a_{23}\sigma_\theta+a_{33}\sigma_z+a_{34}\tau_{\theta z}+a_{35}\tau_{rz}+a_{36}\tau_{r\theta},\tag{23.4}$$

from which

$$\sigma_z=\frac{D}{a_{33}}-\frac{1}{a_{33}}(a_{13}\sigma_r+a_{23}\sigma_\theta+a_{34}\tau_{\theta z}+a_{35}\tau_{rz}+a_{36}\tau_{r\theta}).\tag{23.5}$$

On substituting in (23.3), and introducing the reduced strain coefficients

$$\beta_{ij}=a_{ij}-\frac{a_{i3}a_{j3}}{a_{33}}\qquad(i,j=1,2,4,5,6),\tag{23.6}$$

we rewrite Eqs. (23.3) as

$$\left.\begin{aligned}\frac{\partial u_r}{\partial r}&=\beta_{11}\sigma_r+\beta_{12}\sigma_\theta+\ldots+\beta_{16}\tau_{r\theta}+\frac{a_{13}}{a_{33}}D,\\ \frac{1}{r}\frac{\partial u_\theta}{\partial\theta}+\frac{u_r}{r}&=\beta_{12}\sigma_r+\beta_{22}\sigma_\theta+\ldots+\beta_{26}\tau_{r\theta}+\frac{a_{23}}{a_{33}}D,\\ \frac{\partial w}{\partial z}&=D,\\ \frac{1}{r}\frac{\partial w}{\partial\theta}+\frac{\partial u_\theta}{\partial z}&=\beta_{14}\sigma_r+\beta_{24}\sigma_\theta+\ldots+\beta_{46}\tau_{r\theta}+\frac{a_{34}}{a_{33}}D,\end{aligned}\right\}\tag{23.7}$$

$$\left.\begin{aligned}
&\frac{\partial u_r}{\partial z}+\frac{\partial w}{\partial r}=\beta_{15}\sigma_r+\beta_{25}\sigma_\theta+\ldots+\beta_{56}\tau_{r\theta}+\frac{a_{35}}{a_{33}}D,\\
&\frac{1}{r}\frac{\partial u_r}{\partial\theta}+\frac{\partial u_\theta}{\partial r}-\frac{u_\theta}{r}=\beta_{16}\sigma_r+\beta_{26}\sigma_\theta+\ldots\\
&\qquad\qquad\ldots+\beta_{66}\tau_{r\theta}+\frac{a_{36}}{a_{33}}D.
\end{aligned}\right\}$$

By integrating the third, fourth, and fifth equations of (23.7), we obtain displacements containing three new functions, $U(r, \theta)$, $V(r, \theta)$, $W(r, \theta)$. Further, by satisfying the first, second, and sixth equations of (23.7), we obtain, as before, D as a linear function of the co-ordinates x and y:

$$D = Ar\cos\theta + Br\sin\theta + C. \tag{23.8}$$

After elementary manipulation we further obtain a system of three equations for U, V and a system of two equations for W:

$$\left.\begin{aligned}
&\varepsilon_r^0\equiv\frac{\partial U}{\partial r}=\beta_{11}\sigma_r+\beta_{12}\sigma_\theta+\ldots+\beta_{16}\tau_{r\theta}+\frac{a_{13}}{a_{33}}D,\\
&\varepsilon_\theta^0\equiv\frac{1}{r}\frac{\partial V}{\partial\theta}+\frac{U}{r}=\beta_{12}\sigma_r+\beta_{22}\sigma_\theta+\ldots\\
&\qquad\qquad\ldots+\beta_{26}\tau_{r\theta}+\frac{a_{23}}{a_{33}}D,\\
&\gamma_{r\theta}^0\equiv\frac{1}{r}\frac{\partial U}{\partial\theta}+\frac{\partial V}{\partial r}-\frac{V}{r}=\beta_{16}\sigma_r+\beta_{26}\sigma_\theta+\ldots\\
&\qquad\qquad\ldots+\beta_{66}\tau_{r\theta}+\frac{a_{36}}{a_{33}}D;
\end{aligned}\right\} \tag{23.9}$$

$$\left.\begin{aligned}
&\frac{\partial W}{\partial r}=\beta_{15}\sigma_r+\beta_{25}\sigma_\theta+\ldots+\beta_{56}\tau_{r\theta}+\frac{a_{35}}{a_{33}}D,\\
&\frac{1}{r}\frac{\partial W}{\partial\theta}=\beta_{14}\sigma_r+\beta_{24}\sigma_\theta+\ldots+\beta_{46}\tau_{r\theta}+\frac{a_{34}}{a_{33}}D.
\end{aligned}\right\} \tag{23.10}$$

By eliminating U, V, W from Eqs. (23.9) and (23.10), we derive a system of two equations containing only the stresses. The elimination of the functions U, V from (23.9) is performed by using the identity*

$$\left(\frac{\partial^2}{\partial\theta^2}-r\frac{\partial}{\partial r}\right)\varepsilon_r^0+r\frac{\partial^2}{\partial r^2}(r\varepsilon_\theta^0)-\frac{\partial^2}{\partial r\,\partial\theta}(r\gamma_{r\theta}^0)=0. \tag{23.11}$$

* The validity of this equality can be verified by a simple substitution.

The elimination of W from (23.10) is made in an elementary way, merely by differentiation and subtraction. As a result, instead of (23.9) and (23.10) we obtain obvious equations for the stresses, which will not be written out here.

When the functions U, V, W have been found, the projections of displacement are determined from the formulas

$$\left.\begin{aligned} u_r &= -\frac{z^2}{2}(A\cos\theta + B\sin\theta) + U + u_r', \\ u_\theta &= -\frac{z^2}{2}(-A\sin\theta + B\cos\theta) + V + \vartheta rz + u_\theta', \\ w &= z(Ar\cos\theta + Br\sin\theta + C) + W + w'. \end{aligned}\right\} \quad (23.12)$$

These formulas include rigid-body displacements denoted by primes, which are written out in full as

$$\left.\begin{aligned} u_r' &= z(\omega_2\cos\theta - \omega_1\sin\theta) + u_0\cos\theta + v_0\sin\theta, \\ u_\theta' &= -z(\omega_2\sin\theta + \omega_1\cos\theta) + \omega_3 r - \\ &\qquad\qquad - u_0\sin\theta + v_0\cos\theta, \\ w' &= -r(\omega_2\cos\theta - \omega_1\sin\theta) + w_0. \end{aligned}\right\} \quad (23.13)$$

We introduce two stress functions. In a cylindrical co-ordinate system these functions are related to the stress components by the equations

$$\left.\begin{aligned} &\sigma_r = \frac{1}{r}\frac{\partial F}{\partial r} + \frac{1}{r^2}\frac{\partial^2 F}{\partial\theta^2} + \bar{U}, \\ &\sigma_\theta = \frac{\partial^2 F}{\partial r^2} + \bar{U}, \quad \tau_{r\theta} = -\frac{\partial^2}{\partial r\,\partial\theta}\left(\frac{F}{r}\right), \\ &\tau_{rz} = \frac{1}{r}\frac{\partial\psi}{\partial\theta}, \quad \tau_{\theta z} = -\frac{\partial\psi}{\partial r}. \end{aligned}\right\} \quad (23.14)$$

On the basis of (23.9) to (23.11) and (23.14) we obtain a system of equations that is satisfied by the two functions

in question. This system is written as

$$\left.\begin{aligned}
L_4'F + L_3'\psi = {} & \frac{2}{a_{33}}\left[-a_{36}A + (a_{13}-a_{33})B\right]\frac{\sin\theta}{r} + \\
& + \frac{2}{a_{33}}\left[(a_{13}-a_{23})A + a_{36}B\right]\frac{\cos\theta}{r} - \\
& - (\beta_{12}+\beta_{22})\frac{\partial^2\overline{U}}{\partial r^2} - (\beta_{11}+\beta_{12})\frac{1}{r^2}\frac{\partial^2\overline{U}}{\partial\theta^2} + \\
& + (\beta_{16}+\beta_{26})\frac{1}{r}\frac{\partial^2\overline{U}}{\partial r\,\partial\theta} + \\
& + (\beta_{11}-2\beta_{22}-\beta_{12})\frac{1}{r}\frac{\partial\overline{U}}{\partial r} + (\beta_{16}+\beta_{26})\frac{1}{r^2}\frac{\partial\overline{U}}{\partial\theta}, \\
L_3''F + L_2'\psi = {} & \frac{1}{a_{33}}(2a_{34}A - a_{35}B)\cos\theta + \\
& + \frac{1}{a_{33}}(a_{35}A + 2a_{34}B)\sin\theta + C\frac{a_{34}}{r} - 2\vartheta + \\
& + (\beta_{14}+\beta_{24})\left(\frac{\partial\overline{U}}{\partial r} - \frac{\overline{U}}{r}\right) - (\beta_{15}+\beta_{25})\frac{1}{r}\frac{\partial\overline{U}}{\partial\theta}.
\end{aligned}\right\} \quad (23.15)$$

By L_4', L_3', L_3'', L_2' are meant differential operators of the fourth, third, and second orders, namely

$$\begin{aligned}
L_4' = {} & \beta_{22}\frac{\partial^4}{\partial r^4} - 2\beta_{26}\frac{1}{r}\frac{\partial^4}{\partial r^3\,\partial\theta} + \\
& + (2\beta_{12}+\beta_{66})\frac{1}{r^2}\frac{\partial^4}{\partial r^2\,\partial\theta^2} - 2\beta_{16}\frac{1}{r^3}\frac{\partial^4}{\partial r\,\partial\theta^3} + \\
& + \beta_{11}\frac{1}{r^4}\frac{\partial^4}{\partial\theta^4} + 2\beta_{22}\frac{1}{r}\frac{\partial^3}{\partial r^3} - (2\beta_{12}+\beta_{66})\frac{1}{r^3}\times \\
& \times\frac{\partial^3}{\partial r\,\partial\theta^2} + 2\beta_{16}\frac{1}{r^4}\frac{\partial^3}{\partial\theta^3} - \\
& - \beta_{11}\frac{1}{r^2}\frac{\partial^2}{\partial r^2} - 2(\beta_{16}+\beta_{26})\frac{1}{r^3}\frac{\partial^2}{\partial r\,\partial\theta} + \\
& + (2\beta_{11}+2\beta_{12}+\beta_{66})\frac{1}{r^4}\frac{\partial^2}{\partial\theta^2} + \beta_{11}\frac{1}{r^3}\frac{\partial}{\partial r} + \\
& + 2(\beta_{16}+\beta_{26})\frac{1}{r^4}\frac{\partial}{\partial\theta},
\end{aligned}$$

$$\left.\begin{aligned}
L_3' = &-\beta_{24}\frac{\partial^3}{\partial r^3} + (\beta_{25}+\beta_{46})\frac{1}{r}\frac{\partial^3}{\partial r^2\,\partial\theta} - \\
&-(\beta_{14}+\beta_{56})\frac{1}{r^2}\frac{\partial^3}{\partial r\,\partial\theta^2} + \beta_{15}\frac{1}{r^3}\frac{\partial^3}{\partial\theta^3} + \\
&+(\beta_{14}-2\beta_{24})\frac{1}{r}\frac{\partial^2}{\partial r^2} + (\beta_{46}-\beta_{15})\frac{1}{r^2}\frac{\partial^2}{\partial r\,\partial\theta} + \\
&+\beta_{15}\frac{1}{r^3}\frac{\partial}{\partial\theta}, \\
L_3'' = &-\beta_{24}\frac{\partial^3}{\partial r^3} + (\beta_{25}+\beta_{46})\frac{1}{r}\frac{\partial^3}{\partial r^2\,\partial\theta} - \\
&-(\beta_{14}+\beta_{56})\frac{1}{r^2}\frac{\partial^3}{\partial r\,\partial\theta^2} + \beta_{15}\frac{1}{r^3}\frac{\partial^3}{\partial\theta^3} - \\
&-(\beta_{14}+\beta_{24})\frac{1}{r}\frac{\partial^2}{\partial r^2} + (\beta_{15}-\beta_{46})\frac{1}{r^2}\frac{\partial^2}{\partial r\,\partial\theta} + \\
&+(\beta_{14}+\beta_{56})\frac{1}{r^3}\frac{\partial^2}{\partial\theta^2} + \beta_{46}\frac{1}{r^3}\frac{\partial}{\partial\theta}, \\
L_2' = &\,\beta_{44}\frac{\partial^2}{\partial r^2} - 2\beta_{45}\frac{1}{r}\frac{\partial^2}{\partial r\,\partial\theta} + \beta_{55}\frac{1}{r^2}\frac{\partial^2}{\partial\theta^2} + \\
&+\beta_{44}\frac{1}{r}\frac{\partial}{\partial r}.
\end{aligned}\right\} \tag{23.16}$$

When external forces are prescribed, the conditions on the cylindrical surface, i.e., on the contour of the section may be written as

$$\left.\begin{aligned}
\sigma_r\cos(n,\ r) + \tau_{r\theta}\cos(n,\ \theta) &= R_n, \\
\tau_{r\theta}\cos(n,\ r) + \sigma_\theta\cos(n,\ \theta) &= \Theta_n, \\
\tau_{rz}\cos(n,\ r) + \tau_{\theta z}\cos(n,\ \theta) &= 0,
\end{aligned}\right\} \tag{23.17}$$

where n is the direction of the outward normal, R_n, Θ_n are the projections of the forces distributed over the lateral surface on the directions of the r and θ axes (per unit area). As in the case of a body with rectilinear anisotropy, conditions (23.17) can be transformed by integration along the contour of the section, so that they reduce to the following: the derivatives $\partial F/\partial r$ and $\partial F/\partial\theta$ are prescribed on the contour as functions of the arc length s (or the polar angle θ, which is more convenient in cases where the body is bounded

by the surfaces of coaxial cylinders). The boundary condition for ψ is very simple, viz. ψ = constant.

After satisfying the conditions on the lateral surface, we have still to determine the constants A, B, C, ϑ from the end conditions. For a body with a finite region of the end cross sections (and of any cross section), the forces must reduce to a force P and to a moment with three components, M_1, M_2, M_t. After some manipulation we obtain equations for the constants A, B, C, ϑ in the co-ordinate system x, y, z:

$$(A\xi + B\eta + C)\,S - \iint (a_{13}\sigma_r + a_{23}\sigma_\theta + a_{34}\tau_{\theta z} + a_{35}\tau_{rz} + a_{36}\tau_{r\theta})\,dS = Pa_{33}; \tag{23.18}$$

$$BI_1 - \iint (a_{13}\sigma_r + \ldots + a_{36}\tau_{r\theta})\,(r\sin\theta - \eta)\,dS = M_1 a_{33}, \tag{23.19}$$

$$AI_2 - \iint (a_{13}\sigma_r + \ldots + a_{36}\tau_{r\theta})\,(r\cos\theta - \xi)\,dS = M_2 a_{33}, \tag{23.20}$$

$$\iint \tau_{\theta z} r\,dS = M_t. \tag{23.21}$$

Here ξ, η are the co-ordinates of the centroid in the co-ordinate system x, y, z for which the z axis coincides with the axis of anisotropy, S is the cross-sectional area, I_1, I_2 are the moments of inertia with respect to the x', y' principal axes.

On solving a particular problem of the type considered here, we obtain stress functions satisfying the system of equations (23.15), (23.16) and the conditions on the contour; they contain the constants A, B, C, ϑ, which in some cases may be regarded as known beforehand, and in others are to be determined from Eqs. (23.18) to (23.21).

24. Stress Distribution in a Continuously Non-homogeneous Body Having Cylindrical Anisotropy Dependent on Two Co-ordinates

The problem is formulated as in the preceding section, but it is assumed that the body is continuously non-homogeneous, has cylindrical anisotropy, and is orthotropic.

It is bounded by the surface of a cylinder and, in general, by end planes; there may be cylindrical cavities within the body. The axis of anisotropy g is parallel to the generators of the outer surface and of the surfaces of the cavities and is taken as the z axis of a cylindrical co-ordinate system r, θ, z. The body is acted on by surface forces R_n, Θ_n ($Z_n = 0$) and body forces R, Θ ($Z = 0$) having a potential $\overline{U}$. At the ends (and at the cross sections) the forces reduce to an axial force P_z and a moment with three components (Fig. 26). All elastic characteristics, a_{ij}, and the "engineering" characteristics, E_i, G_{ij}, ν_{ij}, are considered to be continuous single-valued differentiable functions of two co-ordinates, r, θ.

The generalized Hooke's law equations are written as

$$\left.\begin{aligned} \varepsilon_r &= a_{11}\sigma_r + a_{12}\sigma_\theta + a_{13}\sigma_z, \\ \varepsilon_\theta &= a_{12}\sigma_r + a_{22}\sigma_\theta + a_{23}\sigma_z, \\ \varepsilon_z &= a_{13}\sigma_r + a_{23}\sigma_\theta + a_{33}\sigma_z, \\ \gamma_{\theta z} &= a_{44}\tau_{\theta z}, \quad \gamma_{rz} = a_{55}\tau_{rz}, \quad \gamma_{r\theta} = a_{66}\tau_{r\theta}. \end{aligned}\right\} \tag{24.1}$$

The equilibrium equations for a continuous medium and the conditions on the lateral surface and at the ends are no different from those for a homogeneous body having cylindrical anisotropy, (23.2), (23.17), and (23.18) to (23.21). We do not, therefore, need to repeat the derivation, but give the final results, which reduce to the following:

(1) The expressions for displacements are identical in form with (23.12).

(2) The functions U, V, W entering into (23.12) satisfy equations of the type of (23.9) and (23.10), where

$$D = Ar\cos\theta + Br\sin\theta + C, \tag{24.2}$$

(A, B, C are constants),

$$\beta_{ij} = a_{ij} - \frac{a_{i3}a_{j3}}{a_{33}} \quad (i,\ j = 1,\ 2,\ 6), \tag{24.3}$$

and all coefficients β_{ij}, a_{ij}, except β_{11}, β_{12}, β_{22}, β_{66}, a_{11}, a_{22}, a_{33}, a_{44}, a_{55}, a_{66}, a_{12}, a_{13}, a_{23}, are zero.

(3) The stress components σ_r, σ_θ, $\tau_{r\theta}$, $\tau_{\theta z}$, τ_{rz} are expressed in terms of two stress functions, F and ψ, by formulas (23.14);

$$\sigma_z = E_z (Ar \cos\theta + Br \sin\theta + C) + \nu_{zr}\sigma_r + \nu_{z\theta}\sigma_\theta. \tag{24.4}$$

(4) The stress functions F and ψ satisfy two equations with variable coefficients (each function satisfies its particular equation):

$$\begin{aligned}
&\left(\frac{\partial^2}{\partial\theta^2} - r\frac{\partial}{\partial r}\right)\left(\frac{\beta_{11}}{r}\frac{\partial F}{\partial r} + \frac{\beta_{11}}{r^2}\frac{\partial^2 F}{\partial\theta^2} + \beta_{12}\frac{\partial^2 F}{\partial r^2}\right) + \\
&\quad + r\frac{\partial^2}{\partial r^2}\left[r\left(\frac{\beta_{12}}{r}\frac{\partial F}{\partial r} + \frac{\beta_{12}}{r^2}\frac{\partial^2 F}{\partial\theta^2} + \beta_{22}\frac{\partial^2 F}{\partial r^2}\right)\right] + \\
&\quad + \frac{\partial^2}{\partial r\,\partial\theta}\left[\beta_{66} r \frac{\partial^2}{\partial r\,\partial\theta}\left(\frac{F}{r}\right)\right] = \\
&= \left(\frac{\partial^2}{\partial\theta^2} - r\frac{\partial}{\partial r}\right)[\nu_{zr}(Ar\cos\theta + Br\sin\theta + C)] + \\
&\quad + r\frac{\partial^2}{\partial r^2}[\nu_{z\theta}(Ar\cos\theta + Br\sin\theta + C)] - \\
&- \left(\frac{\partial^2}{\partial\theta^2} - r\frac{\partial}{\partial r}\right)[(\beta_{11} + \beta_{12})\bar{U}] - r\frac{\partial^2}{\partial r^2}[(\beta_{12} + \beta_{22}) r\bar{U}],
\end{aligned} \tag{24.5}$$

$$\frac{\partial}{\partial\theta}\left(\frac{1}{G_{rz}}\frac{1}{r}\frac{\partial\psi}{\partial\theta}\right) + \frac{\partial}{\partial r}\left(\frac{r}{G_{\theta z}}\frac{\partial\psi}{\partial r}\right) = -2\vartheta r. \tag{24.6}$$

The reduced coefficients $\beta_{ij}(r, \theta)$ are expressed in terms of the elastic moduli and Poisson's ratios as follows:

$$\left.\begin{aligned}
\beta_{11} &= \frac{1 - \nu_{rz}\nu_{zr}}{E_r}, \quad & \beta_{12} &= -\frac{\nu_{r\theta} + \nu_{rz}\nu_{z\theta}}{E_r}, \\
\beta_{22} &= \frac{1 - \nu_{\theta z}\nu_{z\theta}}{E_\theta}, \quad & \beta_{66} &= \frac{1}{G_{r\theta}}.
\end{aligned}\right\} \tag{24.7}$$

(5) On satisfying the conditions on the lateral surface, we obtain F and ψ containing four constants, A, B, C, ϑ, which must be found from conditions at the ends (or at the cross sections) of the type of (23.18) to (23.21).

GENERALIZED PLANE STRAIN AND PLANE PROBLEM FOR A BODY WITH RECTILINEAR ANISOTROPY

Chapter 4

The present chapter is concerned with special cases of the elastic equilibrium of a body with rectilinear anisotropy bounded by a cylindrical surface and acted on by surface and body forces normal to the generators and constant along the length. If the coefficients a_{ij}, A_{ij} are also constant along the length and the planes of the cross sections coincide with the planes of elastic symmetry, these sections remain plane after deformation, and the state of stress and strain is known as plane strain. In more general cases of anisotropy when the planes of elastic symmetry intersect the geometrical axis at an angle other than 90° or are parallel to it, or else are non-existent at all, the deformation can no longer be referred to as plane strain; it may be termed generalized plane strain. In Chap. 4 the investigation is carried out in a Cartesian co-ordinate system, i.e., it is assumed that the generalized Hooke's law is expressed by Eqs. (18.3), where a_{ij} are constants. The case of a rectilinearly orthotropic non-homogeneous body and a number of special problems are also discussed.

25. Generalized Plane Strain in a Homogeneous Rectilinearly Anisotropic Body

Consider a homogeneous body having general rectilinear anisotropy [Eqs. (18.3)] and bounded by a cylindrical surface.

Let the body be loaded by surface and body forces acting in the planes of the cross sections, i.e., normal to the generators, and not varying along the length. It is supposed, to

begin with, that the length is infinite and the region of the cross section is arbitrary, finite or infinite, simply connected or multiply connected. The origin of co-ordinates is placed at an arbitrary point of a cross section, the z axis is taken parallel to the generators, and the x, y axes are chosen according to convenience and the shape of the section (Fig. 27).

It is evident that in an infinitely long body loaded as indicated above all cross sections are in identical conditions, and hence the stresses and displacements (apart from rigid-body displacements) do not vary along the generators, i.e., they depend only on two co-ordinates, x and y. In an isotropic or anisotropic body at each point of which there is a plane of elastic symmetry normal to the generators, the cross sections remain plane, or, in other words, the deformation is plane strain. If, however, there are planes of elastic symmetry, but none of them is parallel to the xy plane, and particularly in the general case of anisotropy, the deformation is no longer plane strain (since it is not possible to satisfy all equations and conditions of the theory of elasticity assuming $w = 0$); the cross sections will warp, but all identically. This kind of deformation is described as generalized plane strain in distinction to plane (or pure plane) strain.

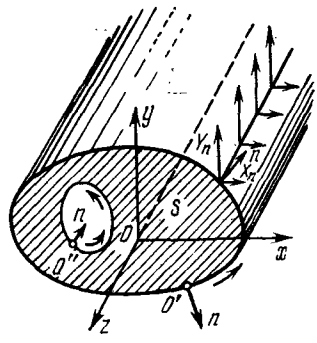

Fig. 27

Consider first the generalized plane deformation of a homogeneous body.

Since the components of stress and the projections of displacement are independent of z [see (18.19)], it follows that we must put, in the formulas and equations of Secs. 18 and 19,

$$A = B = C = \vartheta = 0, \qquad \omega_1 = \omega_2 = 0. \tag{25.1}$$

The displacements are determined by the formulas

$$\left.\begin{aligned} u &= U(x, y) - \omega_3 y + u_0, \\ v &= V(x, y) + \omega_3 x + v_0, \\ w &= W(x, y) + w_0, \end{aligned}\right\} \tag{25.2}$$

U, V, W are related to the stresses by the equations

$$\left.\begin{aligned} \frac{\partial U}{\partial x} &= \beta_{11}\sigma_x + \beta_{12}\sigma_y + \ldots + \beta_{16}\tau_{xy}, \\ \frac{\partial V}{\partial y} &= \beta_{12}\sigma_x + \beta_{22}\sigma_y + \ldots + \beta_{26}\tau_{xy}, \\ \frac{\partial U}{\partial y} + \frac{\partial V}{\partial x} &= \beta_{16}\sigma_x + \beta_{26}\sigma_y + \ldots + \beta_{66}\tau_{xy}; \end{aligned}\right\} \tag{25.3}$$

$$\left.\begin{aligned} \frac{\partial W}{\partial x} &= \beta_{15}\sigma_x + \beta_{25}\sigma_y + \beta_{45}\tau_{yz} + \beta_{55}\tau_{xz} + \beta_{56}\tau_{xy}, \\ \frac{\partial W}{\partial y} &= \beta_{14}\sigma_x + \beta_{24}\sigma_y + \qquad \ldots \qquad + \beta_{46}\tau_{xy}. \end{aligned}\right\} \tag{25.4}$$

The stress σ_z is determined by the formula

$$\sigma_z = -\frac{1}{a_{33}}(a_{13}\sigma_x + a_{23}\sigma_y + a_{34}\tau_{yz} + a_{35}\tau_{xz} + a_{36}\tau_{xy}). \tag{25.5}$$

We proceed in the same way as in the general case considered in Chap. 3, namely we introduce the stress functions F and ψ

$$\left.\begin{aligned} \sigma_x = \frac{\partial^2 F}{\partial y^2} + \overline{U}, \quad \sigma_y = \frac{\partial^2 F}{\partial x^2} + \overline{U}, \quad \tau_{xy} = -\frac{\partial^2 F}{\partial x\,\partial y}; \\ \tau_{xz} = \frac{\partial \psi}{\partial y}, \quad \tau_{yz} = -\frac{\partial \psi}{\partial x} \end{aligned}\right\} \tag{25.6}$$

($\overline{U}$ is the body force potential) and obtain the equations

$$\left.\begin{aligned} L_4 F + L_3 \psi &= -(\beta_{12} + \beta_{22})\frac{\partial^2 \overline{U}}{\partial x^2} + \\ &\quad + (\beta_{16} + \beta_{26})\frac{\partial^2 \overline{U}}{\partial x\,\partial y} - (\beta_{11} + \beta_{12})\frac{\partial^2 \overline{U}}{\partial y^2}, \\ L_3 F + L_2 \psi &= (\beta_{14} + \beta_{24})\frac{\partial \overline{U}}{\partial x} - (\beta_{15} + \beta_{25})\frac{\partial \overline{U}}{\partial y}. \end{aligned}\right\} \tag{25.7}$$

Here L_4, L_3, L_2 are the operators that have already been used in Sec. 19 [formulas (19.3)].

The boundary conditions are of the form of (19.7) (the first fundamental problem) or (19.8) (the second fundamental problem).

Let us briefly consider the case when there are no body forces. Then the expressions for the derivatives of F and for ψ, for the stresses and displacements in terms of the complex potentials $\Phi_k(z_k)$ and the boundary conditions for them are obtained from (21.2), (21.3), (21.5) to (21.9) putting

$$\overline{U} = F_0 = \psi_0 = 0, \quad U_0 = V_0 = 0. \tag{25.8}$$

We shall not write out all these expressions and conditions, but state, without proof, the results of investigations of the functions Φ_k, which have been carried out in sufficient detail in [77].

(1) If the region S of the section has a cutout (the body has a longitudinal cylindrical cavity) and the forces acting on its contour reduce to a resultant force vector with projections P_x, P_y (per unit length in the axial direction) and to a resultant couple, then each of the functions Φ_k is made up of a continuous, single-valued part and a multiple-valued part receiving a constant (independent of z_k) increment Δ_k on passing once round the contour γ bounding the hole. The increments of the functions Φ_k and of the conjugate functions $\overline{\Phi}_k$ (denoted by $\overline{\Delta}_k$ here) are determined from the system of six equations:

$$\left.\begin{aligned}
&\Delta_1 + \Delta_2 + \lambda_3\Delta_3 + \overline{\Delta}_1 + \overline{\Delta}_2 + \overline{\lambda}_3\overline{\Delta}_3 = P_y,\\
&\mu_1\Delta_1 + \mu_2\Delta_2 + \mu_3\lambda_3\Delta_3 + \overline{\mu}_1\overline{\Delta}_1 + \overline{\mu}_2\overline{\Delta}_2 +\\
&\qquad\qquad + \overline{\mu}_3\overline{\lambda}_3\overline{\Delta}_3 = -P_x,\\
&\lambda_1\Delta_1 + \lambda_2\Delta_2 + \Delta_3 + \overline{\lambda}_1\overline{\Delta}_1 + \overline{\lambda}_2\overline{\Delta}_2 + \overline{\Delta}_3 = 0,\\
&p_1\Delta_1 + p_2\Delta_2 + p_3\Delta_3 + \overline{p}_1\overline{\Delta}_1 + \overline{p}_2\overline{\Delta}_2 + \overline{p}_3\overline{\Delta}_3 = 0,\\
&q_1\Delta_1 + q_2\Delta_2 + q_3\Delta_3 + \overline{q}_1\overline{\Delta}_1 + \overline{q}_2\overline{\Delta}_2 + \overline{q}_3\overline{\Delta}_3 = 0,\\
&r_1\Delta_1 + r_2\Delta_2 + r_3\Delta_3 + \overline{r}_1\overline{\Delta}_1 + \overline{r}_2\overline{\Delta}_2 + \overline{r}_3\overline{\Delta}_3 = 0.
\end{aligned}\right\} \tag{25.9}$$

(2) If the region S has n holes (cutouts), i.e., the body has n longitudinal parallel cavities, and if the forces on the

contour of each of them reduce to a resultant force vector with projections P_{xi}, P_{yi} ($i = 1, 2, \ldots, n$) and to a resultant couple, then the equations determining the increments of the multiple-valued parts of the functions Φ_k hold for each of the contours γ_i bounding one hole. In other words, we obtain n systems of equations similar to (25.9), where Δ_k and $\overline{\Delta}_k$ must be replaced, respectively, by Δ_{ki} and $\overline{\Delta}_{ki}$, the increments of the functions Φ_k and $\overline{\Phi}_k$ on passing once round the contour γ_i, and P_{xi}, P_{yi} must be substituted for P_x, P_y. We have altogether n systems each of which contains six unknowns (increments).

(3) If the region S has holes (cutouts), but the force system acting on each of them is balanced or the forces reduce just to a resultant couple, then all equations of the form of (25.9) are homogeneous. The determinant of each system is different from zero, and hence all increments Δ_k, $\overline{\Delta}_k$ are zero, all three functions Φ_k are holomorphic and single-valued (in their regions S_k). This is also true in the case of the region S without a cutout.

For a body of finite length the deformation is not, in general, generalized plane strain since the displacements depend on the third variable, z. For such a body, the formulas derived for an infinite cylinder are strictly valid only when the forces acting at the ends are distributed in the same manner as the stresses τ_{xz}, τ_{yz}, σ_z at the cross sections of an infinite cylinder. But, on the basis of Saint-Venant's principle, it may be stated that the stress distribution in a body of finite length is, to a first approximation, the same as it is in an infinite body, if its ends are fixed; it is then necessary to exclude from consideration zones of local stresses near the ends.

If the ends of a body of finite length are free from forces and are not fixed, the following exact conditions must be fulfilled at the ends:

$$\tau_{xz} = \tau_{yz} = \sigma_z = 0 \tag{25.10}$$

these conditions may be replaced by approximate ones by requiring that the resultant force vector and the resultant moment of the forces at the ends should be zero. To solve this problem, it is necessary to return to the equations of

Sec. 21 without setting beforehand the constants A, B, C, ϑ equal to zero. On determining F, ψ or Φ_k satisfying the appropriate conditions on the lateral surface (or on the contour of the cross section), we next find these constants from Eqs. (19.13), (19.14) or (19.18), (19.20), where we must put $P_z = M_1 = M_2 = M_t = 0$.

26. Plane Strain and Generalized Plane Stress

Suppose that the body in the form of a cylinder of infinite length (see Fig. 27) considered in the preceding section has, at each point, a plane of elastic symmetry normal to the generators, i.e., to the z axis. In this case we deal with pure plane strain since all equations of the theory of elasticity can be satisfied assuming $w = w_0 =$ constant, and considering the displacements u, v to be functions of only two variables, x and y. Then $\gamma_{xz} = \gamma_{yz} = \varepsilon_z = 0$ and the stresses are determined by the formulas

$$\left.\begin{aligned} &\tau_{xz} = \tau_{yz} = 0, \\ &\sigma_z = -\frac{1}{a_{33}}(a_{13}\sigma_x + a_{23}\sigma_y + a_{36}\tau_{xy}); \end{aligned}\right\} \tag{26.1}$$

$$\sigma_x = \frac{\partial^2 F}{\partial y^2} + \overline{U}, \quad \sigma_y = \frac{\partial^2 F}{\partial x^2} + \overline{U}, \quad \tau_{xy} = -\frac{\partial^2 F}{\partial x\,\partial y}. \tag{26.2}$$

The function F satisfies the equation

$$\begin{aligned} \beta_{22}\frac{\partial^4 F}{\partial x^4} - 2\beta_{26}\frac{\partial^4 F}{\partial x^3\,\partial y} + (2\beta_{12} + \beta_{66})\frac{\partial^4 F}{\partial x^2\,\partial y^2} - 2\beta_{16}\frac{\partial^4 F}{\partial x\,\partial y^3} + \\ + \beta_{11}\frac{\partial^4 F}{\partial y^4} = -(\beta_{12} + \beta_{22})\frac{\partial^2 \overline{U}}{\partial x^2} + (\beta_{16} \quad \beta_{26})\frac{\partial^2 \overline{U}}{\partial x\,\partial y} - \\ - (\beta_{12} + \beta_{11})\frac{\partial^2 \overline{U}}{\partial y^2}. \end{aligned} \tag{26.3}$$

The general expression for the function F depends on the complex parameters μ_k, the roots of the algebraic equation $l_4(\mu) = 0$ (see Sec. 20). In the case of distinct complex parameters

$$F = 2\mathrm{Re}\,[F_{11}(z_1) + F_{12}(z_2)] + F_0, \tag{26.4}$$

where $F_{11}(z_1)$, $F_{12}(z_2)$ are arbitrary analytic functions of the generalized (complicated) complex variables

$$z_1 = x + \mu_1 y, \quad z_2 = x + \mu_2 y, \tag{26.5}$$

and F_0 is a particular solution of the non-homogeneous equation (26.3).

In the case of pairwise equal roots ($\mu_1 = \mu_2$, $\overline{\mu_1} = \overline{\mu_2}$)

$$F = 2\mathrm{Re}\,[\overline{z_1} F_{11}(z_1) + F_{12}(z_1)] + F_0. \tag{26.6}$$

If $\mu_1 = \mu_2 = \alpha + \beta i$, then $z_1 = x_1 + iy_1$, where $x_1 = x + \alpha y$, $y_1 = \beta y$.

To determine the stresses and displacements, it is necessary to find two functions, $F_{11}(z_1)$, $F_{12}(z_1)$, of the ordinary complex variable $z_1 = x_1 + iy_1$, i.e., to solve the plane problem for an isotropic body, though not for the region S of the section, but for a region S_1 obtained from the given one by affine transformation (see Fig. 25). The subject of the plane problem and of the methods of its solution has been studied in great detail by N.I. Muskhelishvili [32].* Leaving out the discussion of the case of equal complex parameters μ_1 and μ_2, we shall consider them unequal in what follows.

Introducing the complex potentials

$$\Phi_1(z_1) = F'_{11}(z_1), \quad \Phi_2(z_2) = F'_{12}(z_2) \tag{26.7}$$

(the primed symbols represent the derivatives of the functions with respect to the complicated complex variable), we obtain the general expressions for the first derivatives of F and for the components of stress and the projections of displacement in the absence of body forces:

$$\left.\begin{aligned} \frac{\partial F}{\partial x} &= 2\,\mathrm{Re}\,[\Phi_1(z_1) + \Phi_2(z_2)], \\ \frac{\partial F}{\partial y} &= 2\,\mathrm{Re}\,[\mu_1\Phi_1 + \mu_2\Phi_2]; \end{aligned}\right\} \tag{26.8}$$

$$\left.\begin{aligned} \sigma_x &= 2\,\mathrm{Re}\,[\mu_1^2\Phi'_1(z_1) + \mu_2^2\Phi'_2(z_2)], \\ \sigma_y &= 2\,\mathrm{Re}\,[\Phi'_1 + \Phi'_2], \\ \tau_{xy} &= -2\,\mathrm{Re}\,[\mu_1\Phi'_1 + \mu_2\Phi'_2]; \end{aligned}\right\} \tag{26.9}$$

$$\left.\begin{aligned} u &= 2\,\mathrm{Re}\,[p_1\Phi_1(z_1) + p_2\Phi_2(z_2)] - \omega_3 y + u_0, \\ v &= 2\,\mathrm{Re}\,[q_1\Phi_1(z_1) + q_2\Phi_2(z_2)] + \omega_3 x + v_0 \end{aligned}\right\} \tag{26.10}$$

* It will be recalled that N. I. Muskhelishvili has considered only isotropic bodies. Nevertheless, his methods may be used to advantage in the investigation of some cases of the elastic equilibrium of anisotropic bodies.

(rigid-body displacements for planes parallel to xy have been retained). In these formulas

$$\left.\begin{aligned} p_1 &= \beta_{11}\mu_1^2 + \beta_{12} - \beta_{16}\mu_1, \\ p_2 &= \beta_{11}\mu_2^2 + \beta_{12} - \beta_{16}\mu_2, \\ q_1 &= \beta_{12}\mu_1 + \frac{\beta_{22}}{\mu_1} - \beta_{26}, \\ q_2 &= \beta_{12}\mu_2 + \frac{\beta_{22}}{\mu_2} - \beta_{26}. \end{aligned}\right\} \tag{26.11}$$

The problem is reduced to that of determining two complex potentials, Φ_1 and Φ_2, satisfying the boundary conditions on the contour of the region S of the cross section. The boundary conditions involving prescribed forces X_n, Y_n on the contour are of the form

$$\left.\begin{aligned} 2\,\mathrm{Re}\,(\Phi_1 + \Phi_2) &= \mp \int_0^s Y_n\,ds + c_1, \\ 2\,\mathrm{Re}\,(\mu_1\Phi_1 + \mu_2\Phi_2) &= \pm \int_0^s X_n\,ds + c_2 \end{aligned}\right\} \tag{26.12}$$

(the upper signs on the right-hand sides of (26.12) are to be taken for the outer contour, and the lower signs for the inner contour, i.e., for the contour of a cutout; c_1, c_2 are constants, which may be assigned arbitrarily on either of the contours bounding the region). When displacements u^*, v^* are prescribed, the boundary conditions are of the form

$$\left.\begin{aligned} 2\,\mathrm{Re}\,(p_1\Phi_1 + p_2\Phi_2) &= u^* + \omega_3 y - u_0, \\ 2\,\mathrm{Re}\,(q_1\Phi_1 + q_2\Phi_2) &= v^* - \omega_3 x - v_0. \end{aligned}\right\} \tag{26.13}$$

By considering $\Phi_1(z_1)$, $\Phi_2(z_2)$ as functions of the ordinary complex variables $z_k = x_k + iy_k$ $(k = 1, 2)$, we must determine them in regions S_1, S_2 that are in affine correspondence with the region S of the cross section (see Sec. 21).

The conditions that must be satisfied by these functions inside the region of the cross section or in their regions S_1, S_2 are obtained from the conditions of a more complicated problem; they have been previously investigated in sufficient detail (see Sec. 25 or [77]).

All formulas for an infinite cylinder may, by virtue of Saint-Venant's principle, be applied to a body of finite length with fixed ends. In the case of free and unloaded ends the axial forces P_z and the bending moments M_1, M_2 resulting at the ends can be removed by superimposing the following elementary distribution on the stress distribution in an infinite cylinder:

$$\left.\begin{aligned} \sigma_z &= -\frac{P_z}{S} - \frac{M_1}{I_1}y - \frac{M_2}{I_2}x, \\ \sigma_x &= \sigma_y = \tau_{yz} = \tau_{xz} = \tau_{xy} = 0. \end{aligned}\right\} \tag{26.14}$$

Consider the elastic equilibrium of a flat plate of uniform thickness h of homogeneous anisotropic material having, at each point, a plane of elastic symmetry parallel to the middle plane. Suppose that the surface forces are distributed along the edge, and the body forces over the plate, that they are symmetrical with respect to the middle plane and vary only slightly across the thickness. By taking the middle plane as the co-ordinate plane xy, and choosing the x and y axes according to convenience (Fig. 28), we shall consider the average values (across the thickness) of stresses and displacements parallel to the xy plane rather than the true stresses and displacements:

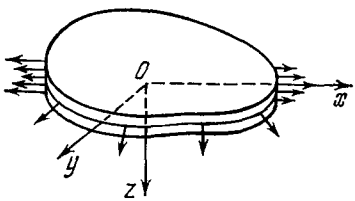

Fig. 28

$$\left.\begin{aligned} &\bar{\sigma}_x = \frac{1}{h}\int_{-h/2}^{h/2} \sigma_x\,dz, \quad \bar{\sigma}_y = \frac{1}{h}\int_{-h/2}^{h/2} \sigma_y\,dz, \\ &\bar{\tau}_{xy} = \frac{1}{h}\int_{-h/2}^{h/2} \tau_{xy}\,dz; \\ &\bar{u} = \frac{1}{h}\int_{-h/2}^{h/2} u\,dz, \quad \bar{v} = \frac{1}{h}\int_{-h/2}^{h/2} v\,dz. \end{aligned}\right\} \tag{26.15}$$

From Eqs. (18.2), (18.3) we obtain equations that are satisfied by $\bar{\sigma}_x$, $\bar{\sigma}_y$, $\bar{\tau}_{xy}$, $\bar{u}$, $\bar{v}$ (the average value of σ_z, i.e.,

$\bar{\sigma}_z$ is neglected in comparison with $\bar{\sigma}_x$, $\bar{\sigma}_y$, $\bar{\tau}_{xy}$). The resulting equations for the average stresses are the same as Eqs. (26.2) in the case of plane strain. The function F satisfies Eq. (26.3) in which the reduced strain coefficients β_{ij} must be replaced by the corresponding coefficients a_{ij}:

$$a_{12}\frac{\partial^4 F}{\partial x^4} - 2a_{26}\frac{\partial^4 F}{\partial x^3\,\partial y} + (2a_{12}+a_{66})\frac{\partial^4 F}{\partial x^2\,\partial y^2} - \\ - 2a_{16}\frac{\partial^4 F}{\partial x\,\partial y^3} + a_{11}\frac{\partial^2 F}{\partial y^4} = -(a_{12}+a_{22})\frac{\partial^2 \bar{U}}{\partial x^2} + \\ + (a_{16}+a_{26})\frac{\partial^2 \bar{U}}{\partial x\,\partial y} - (a_{11}+a_{12})\frac{\partial^2 \bar{U}}{\partial y^2}. \quad (26.16)$$

The boundary conditions are no different from (26.12) or (26.13), except that the complex parameters μ_1, μ_2, $\bar{\mu}_1$, $\bar{\mu}_2$ are the roots of the equation

$$a_{11}\mu^4 - 2a_{16}\mu^3 + (2a_{12} + a_{66})\,\mu^2 - 2a_{26}\mu + a_{22} = 0. \quad (26.17)$$

Hence, the solution found for any case of plane strain is also the solution for the corresponding case of generalized plane stress. Clearly, if β_{ij} are replaced by a_{ij}, the structure of the functions Φ_1, Φ_2 and of the formulas for the stresses and displacements is unaltered; only the coefficients in the formulas are changed.

The problems of plane strain and of generalized plane stress are combined under the common name the *plane problem of the theory of elasticity*.

The questions of the existence and uniqueness of the solution of the plane problem for an anisotropic body are sufficiently well studied. They are discussed in [98], [118], and [121], where the plane problem is reduced to integral equations.

27. Plane Problem for a Continuously Non-homogeneous, Rectilinearly Orthotropic Body. Extension and Bending by Moments

Based on the results of Sec. 22, we can obtain, as special cases, the equations and boundary conditions for the plane problem and the related problem of a continuously non-

homogeneous cylinder extended by an axial force and bent by moments (Saint-Venant's problem).

Consider a body in the form of a cylinder of finite or infinite length with strain coefficients a_{ij} constant along its length and dependent on two co-ordinates. For simplicity, we shall consider only an orthotropic body in which through each point there pass three planes of elastic symmetry: one plane normal to the generators and two orthogonal planes parallel to the generators, the planes at different points being respectively parallel. Let the origin of co-ordinates be placed at the centroid of a cross section and let co-ordinate axes be chosen so that the z axis is parallel to the generators, and the x and y axes are normal to the planes of elastic symmetry; they are not, in general, coincident with the principal axes of inertia of the section.

(1) *Plane strain.* Let a body whose length is infinite be in equilibrium under forces distributed over the lateral surface, normal to the generators, and constant along the length. As in the case of a homogeneous body, we assume

$$\left.\begin{array}{c} w = w_0 = \text{constant}, \quad u = u(x, y), \quad v = v(x, y) \\ A = B = C = \vartheta = 0 \end{array}\right\} \tag{27.1}$$

and obtain

$$\sigma_x = \frac{\partial^2 F}{\partial y^2} + \bar{U}, \quad \sigma_y = \frac{\partial^2 F}{\partial x^2} + \bar{U}, \quad \tau_{xy} = -\frac{\partial^2 F}{\partial x\, \partial y}; \tag{27.2}$$

$$\tau_{xz} = \tau_{yz} = 0, \quad \sigma_z = \nu_{31}\sigma_x + \nu_{32}\sigma_y. \tag{27.3}$$

The function F satisfies the equation

$$\frac{\partial^2}{\partial x^2}\left(\beta_{22}\frac{\partial^2 F}{\partial x^2} + \beta_{12}\frac{\partial^2 F}{\partial y^2}\right) + \\ + \frac{\partial^2}{\partial y^2}\left(\beta_{12}\frac{\partial^2 F}{\partial x^2} + \beta_{11}\frac{\partial^2 F}{\partial y^2}\right) + \frac{\partial^2}{\partial x\, \partial y}\left(\beta_{66}\frac{\partial^2 F}{\partial x\, \partial y}\right) = \\ = -\frac{\partial^2}{\partial x^2}[(\beta_{12} + \beta_{22})\bar{U}] - \frac{\partial^2}{\partial y^2}[(\beta_{11} + \beta_{12})\bar{U}]. \tag{27.4}$$

The boundary conditions in the case of the first fundamental problem reduce to a specification of the first derivatives of F on the contour (to within additive constants). The coefficients β_{ij} are related to the elastic characteristics a_{ij} by equations (22.4).

(2) *Generalized plane stress.* In this case the average stresses and displacements across the thickness $\bar{\sigma}_x$, $\bar{\sigma}_y$, $\bar{\tau}_{xy}$, $\bar{u}$, $\bar{v}$ are only considered.

The stresses are expressed in terms of the stress function by formulas (27.2). The function F satisfies Eq. (27.4), where β_{ij} must be replaced by the coefficients a_{ij}. The latter are related to the engineering characteristics as follows:

$$\left.\begin{aligned} a_{11} &= \frac{1}{E_1}, \\ a_{12} &= -\frac{\nu_{12}}{E_1} = -\frac{\nu_{21}}{E_2}, \\ a_{22} &= \frac{1}{E_2}, \\ a_{66} &= \frac{1}{G_{12}}. \end{aligned}\right\} \tag{27.5}$$

(3) *Extension by an axial force and bending by moments.* If the length of a body and the region of the cross section

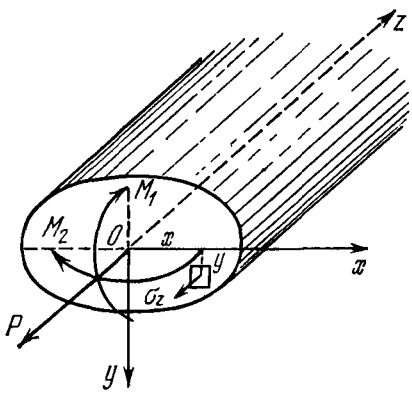

Fig. 29

are finite and if the load is distributed only over the ends so that it reduces at each end to an axial force P (applied at the centroid, which is taken as the origin) and to moments M_1, M_2 about the x, y axes (Fig. 29), we cannot set $w =$

= constant a priori in the equations of Sec. 22, and the formulas for the stresses are obtained as

$$\sigma_x = \frac{\partial^2 F}{\partial y^2}, \quad \sigma_y = \frac{\partial^2 F}{\partial x^2}, \quad \tau_{xy} = -\frac{\partial^2 F}{\partial x\, \partial y}; \tag{27.6}$$

$$\left.\begin{aligned} &\tau_{xz} = \tau_{yz} = 0, \\ &\sigma_z = E_3 (Ax + By + C) + \nu_{31}\sigma_x + \nu_{32}\sigma_y. \end{aligned}\right\} \tag{27.7}$$

The stress function satisfies the equation

$$\frac{\partial^2}{\partial x^2}\left(\beta_{22}\frac{\partial^2 F}{\partial x^2} + {}_{12}\frac{\partial^2 F}{\partial y^2}\right) + \frac{\partial^2}{\partial y^2}\left(\beta_{12}\frac{\partial^2 F}{\partial x^2} + \beta_{11}\frac{\partial^2 F}{\partial y^2}\right) +$$
$$+ \frac{\partial^2}{\partial x\, \partial y}\left(\beta_{66}\frac{\partial^2 F}{\partial x\, \partial y}\right) = -\frac{\partial^2}{\partial x^2}\left[\frac{a_{23}}{a_{33}}(Ax + By + C)\right] -$$
$$- \frac{\partial^2}{\partial y^2}\left[\frac{a_{13}}{a_{33}}(Ax + By + C)\right] \tag{27.8}$$

and the boundary conditions on the contour of the cross section

$$\frac{\partial F}{\partial x} = c_1, \quad \frac{\partial F}{\partial y} = c_2. \tag{27.9}$$

The function F satisfying Eq. (27.8) and conditions (27.9) contains three constants, A, B, C, which are found from the conditions at the ends (and at any cross section):

$$\left.\begin{aligned} &\int\int \sigma_z\, dx\, dy = P, \quad \int\int \sigma_z y\, dx\, dy = M_1, \\ &\int\int \sigma_z x\, dx\, dy = M_2. \end{aligned}\right\} \tag{27.10}$$

In passing, we note that each of Eqs. (27.10) contains, in general, all three unknowns, A, B, C, if the x and y axes are not coincident with the principal axes of inertia of the section.

The problem has an elementary solution if Poisson's ratio ν_{31} depends only on x, and ν_{32} only on y, or if both Poisson's ratios are constants. The general nature of stress distribution is then the same as in a homogeneous rod:

$$\left.\begin{aligned} &\sigma_z = E_3 (Ax + By + C), \\ &\sigma_x = \sigma_y = \tau_{yz} = \tau_{xz} = \tau_{xy} = 0. \end{aligned}\right\} \tag{27.11}$$

The only non-vanishing stress component (out of six) may be a non-linear function of x and y, depending on $E_3(x, y)$.

28. Stress Distribution in an Elastic Homogeneous Half-space under Forces Applied to the Boundary Plane

Of special problems of generalized plane strain one of the simplest is that of stress distribution in an elastic homogeneous half-space under forces applied to the boundary plane and dependent only on one co-ordinate.

Consider the elastic equilibrium of a semi-infinite homogeneous body bounded by a plane (elastic half-space) in a state of generalized plane strain under forces applied to the boundary plane.

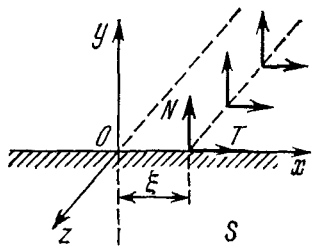

Fig. 30

Let this plane be taken as the xz plane, with the y axis directed outward and the other axes as shown in Fig. 30. Suppose that (1) the material exhibits rectilinear anisotropy of the most general kind, (2) the forces act in planes normal to the z axis and do not vary along this axis, (3) the resultant vector of forces distributed over any portion of a strip parallel to x is finite and tends to a definite limit as the ends of the portion go into infinity.

The region S of the section is a half-plane in this case (the lower half-plane, $y \leqslant 0$); the regions of the functions Φ_1, Φ_2, Φ_3, i.e., S_1, S_2, S_3 are also half-planes. If the forces satisfy the conditions stated above, it is natural to assume that the stresses are zero at infinity, and this is true when $\Phi_k'(\infty) = 0$ $(k = 1, 2, 3)$.

N.I. Muskhelishvili has obtained a solution of the problem for an isotropic elastic half-plane based on some properties of Cauchy-type integrals taken along a straight line [32]. Muskhelishvili's method may be used successfully to solve the problem of the elastic equilibrium of an *anisotropic*

half-space. We recall two necessary formulas. Let $f(z)$ be a function of the complex variable $z = x + iy$, holomorphic in the lower half-plane $y \leqslant 0$ and continuous up to the boundary, with $f(\infty) = 0$. If z is a point in the lower half-plane and if ξ is a point of the boundary (abscissa), the following equalities hold:

$$\left.\begin{aligned} &\frac{1}{2\pi i}\int_{-\infty}^{\infty}\frac{f(\xi)}{\xi - z}\,d\xi = -f(z), \\ &\frac{1}{2\pi i}\int_{-\infty}^{\infty}\frac{\overline{f(\xi)}}{\xi - z}\,d\xi = 0. \end{aligned}\right\} \tag{28.1}$$

Let the normal and tangential components of the external forces (per unit area) be denoted by $N(\xi)$ and $T(\xi)$, respectively. The boundary conditions when $y = 0$ are written as

$$\sigma_y = N(\xi), \quad \tau_{xy} = T(\xi), \quad \tau_{yz} = 0. \tag{28.2}$$

Suppose that all three complex parameters, μ_k, are distinct.

From this we obtain conditions for the functions Φ_k', $\overline{\Phi_k'}$ (see [26], p. 116):

$$\left.\begin{aligned} &\Phi_1'(\xi) + \Phi_2'(\xi) + \lambda_3\Phi_3'(\xi) + \\ &\qquad + \overline{\Phi_1'}(\xi) + \overline{\Phi_2'}(\xi) + \overline{\lambda_3}\overline{\Phi_3'}(\xi) = N(\xi), \\ &\mu_1\Phi_1'(\xi) + \mu_2\Phi_2'(\xi) + \mu_3\lambda_3\Phi_3'(\xi) + \\ &\qquad + \overline{\mu_1}\overline{\Phi_1'}(\xi) + \overline{\mu_2}\overline{\Phi_2'}(\xi) + \overline{\mu_3}\overline{\lambda_3}\overline{\Phi_3'}(\xi) = T(\xi), \\ &\lambda_1\Phi_1'(\xi) + \lambda_2\Phi_2'(\xi) + \Phi_3'(\xi) + \\ &\qquad + \overline{\lambda_1}\overline{\Phi_1'}(\xi) + \overline{\lambda_2}\overline{\Phi_2'}(\xi) + \overline{\Phi_3'}(\xi) = 0. \end{aligned}\right\} \tag{28.3}$$

We multiply both sides of this equality by $\frac{1}{2\pi i}\frac{d\xi}{\xi - z}$, where z is a point inside the region S, and integrate them between the limits $(-\infty, \infty)$. On the basis of (28.1) we then obtain

$$\left.\begin{aligned} &\Phi_1'(z) + \Phi_2'(z_2) + \lambda_3\Phi_3'(z) = -\frac{1}{2\pi i}\int_{-\infty}^{\infty}\frac{N(\xi)}{\xi - z}\,d\xi, \\ &\mu_1\Phi_1' + \mu_2\Phi_2' + \mu_3\lambda_3\Phi_3' = \frac{1}{2\pi i}\int_{-\infty}^{\infty}\frac{T(\xi)}{\xi - z}\,d\xi, \\ &\lambda_1\Phi_1' + \lambda_2\Phi_2' + \Phi_3' = 0. \end{aligned}\right\} \tag{28.4}$$

By solving these equations, we find

$$\left.\begin{aligned}
\Phi_1'(z) &= \frac{1}{2\pi i\Delta}\int_{-\infty}^{\infty}\frac{N(\xi)(\mu_3\lambda_2\lambda_3-\mu_2)+T(\xi)(\lambda_2\lambda_3-1)}{\xi-z}\,d\xi,\\
\Phi_2'(z) &= \frac{1}{2\pi i\Delta}\int_{-\infty}^{\infty}\frac{N(\xi)(\mu_1-\mu_3\lambda_1\lambda_3)+T(\xi)(1-\lambda_1\lambda_3)}{\xi-z}\,d\xi,\\
\Phi_3'(z) &= \frac{1}{2\pi i\Delta}\int_{-\infty}^{\infty}\frac{N(\xi)(\mu_2\lambda_1-\mu_1\lambda_2)+T(\xi)(\lambda_1-\lambda_2)}{\xi-z}\,d\xi.
\end{aligned}\right\}\qquad(28.5)$$

Here

$$\Delta=\mu_2-\mu_1+\lambda_2\lambda_3(\mu_1-\mu_3)+\lambda_1\lambda_3(\mu_3-\mu_2)\qquad(28.6)$$

is the determinant of system (28.4). We shall always assume that this quantity is different from zero. It becomes zero when the complex parameters are equal, but this case, as has been noted, is not considered here. Whether Δ can vanish when all three complex parameters are distinct or two are equal remains to be seen.

When $y=0$, $x=\xi$, the complex variables (the basic variable z and the complicated variables z_1, z_2, z_3) assume the same value of ξ (real); consequently ([26], p. 117),

$$\left.\begin{aligned}
\Phi_1'(z_1) &= \frac{1}{2\pi i\Delta}\int_{-\infty}^{\infty}\frac{N(\xi)(\mu_3\lambda_2\lambda_3-\mu_2)+T(\xi)(\lambda_2\lambda_3-1)}{\xi-z_1}\,d\xi,\\
\Phi_2'(z_2) &= \frac{1}{2\pi i\Delta}\int_{-\infty}^{\infty}\frac{N(\xi)(\mu_1-\mu_3\lambda_1\lambda_3)+T(\xi)(1-\lambda_1\lambda_3)}{\xi-z_2}\,d\xi,\\
\Phi_3'(z_3) &= \frac{1}{2\pi i\Delta}\int_{-\infty}^{\infty}\frac{N(\xi)(\mu_2\lambda_1-\mu_1\lambda_2)+T(\xi)(\lambda_1-\lambda_2)}{\xi-z_3}\,d\xi.
\end{aligned}\right\}\qquad(28.7)$$

If there are planes of elastic symmetry normal to the z axis, we obtain a solution of the plane problem (plane

strain) from formulas (28.7), which now take the form

$$\left.\begin{aligned}
\Phi_1'(z_1) &= \frac{1}{\mu_1-\mu_2}\frac{1}{2\pi i}\int_{-\infty}^{\infty}\frac{N(\xi)\mu_2+T(\xi)}{\xi-z_1}\,d\xi,\\
\Phi_2'(z_2) &= \frac{-1}{\mu_1-\mu_2}\frac{1}{2\pi i}\int_{-\infty}^{\infty}\frac{N(\xi)\mu_1+T(\xi)}{\xi-z_2}\,d\xi,\\
\Phi_3'(z_3) &= 0.
\end{aligned}\right\}\qquad(28.8)$$

The second fundamental problem is solved in a similar way.

Muskhelishvili's method can be used to obtain a solution for a more complicated case when the elastic half-space is bounded from above, not by a plane, but by the concave surface of a parabolic cylinder (Fig. 31)

$$y = ax^2 \qquad (28.9)$$

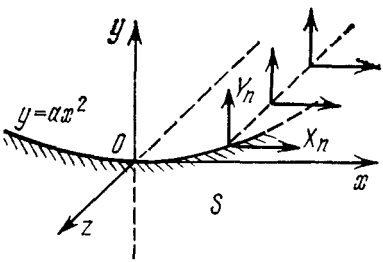

Fig. 31

and is in a state of generalized plane strain under external surface forces X_n, Y_n ($Z_n = 0$). It is first necessary to map conformally the regions S and S_k onto the lower half-plane. In the present case this can be done so that to each point on the boundary of the region S correspond points of the boundaries of the regions S_1, S_2, S_3 that are in affine correspondence among themselves, and to all four affine-corresponding points corresponds one and only one point on the boundary of the half-plane. This problem is discussed in greater detail in the author's paper [78], and so we shall not elaborate upon it, but present only the final formulas for the functions Φ_k':

$$\Phi_1'(z_1) = \frac{1}{\sqrt{1+4a\mu_1 z_1}}\frac{1}{2\pi i\Delta}\times$$
$$\times\int_{-\infty}^{\infty}\frac{Y_n(\mu_3\lambda_2\lambda_3-\mu_2)+X_n(\lambda_2\lambda_3-1)}{\xi-\zeta_1(z_1)}\sqrt{1+4a^2\xi^2}\,d\xi,$$

$$\left.\begin{aligned}
\Phi_2'(z_2) &= \frac{1}{\sqrt{1+4a\mu_2 z_2}}\,\frac{1}{2\pi i\Delta}\times\\
&\times\int_{-\infty}^{\infty}\frac{Y_n(\mu_1-\mu_3\lambda_1\lambda_3)+X_n(1-\lambda_1\lambda_3)}{\xi-\zeta_2(z_2)}\sqrt{1+4a^2\xi^2}\,d\xi,\\
\Phi_3'(z_3) &= \frac{1}{\sqrt{1+4a\mu_3 z_3}}\,\frac{1}{2\pi i\Delta}\times\\
&\times\int_{-\infty}^{\infty}\frac{Y_n(\mu_2\lambda_1-\mu_1\lambda_2)+X_n(\lambda_1-\lambda_2)}{\xi-\zeta_3(z_3)}\sqrt{1+4a^2\xi^2}\,d\xi.
\end{aligned}\right\}\qquad(28.10)$$

Here

$$\zeta_k(z_k)=\frac{1}{2\mu_k a}\left(\sqrt{1+4a\mu_k z_k}-1\right)\qquad(28.11)$$

are functions assuming the same value of x when $y = ax^2$.

29. The Case of a Load Distributed Uniformly along a Straight Line

Consider a special case: a normal load is distributed uniformly along an infinite straight line $x = 0$, $y = 0$. It is assumed that the half-space is homogeneous, but possesses anisotropy of the general kind. To obtain a solution of this problem, we first consider the case when the normal forces $p/(2\varepsilon)$ are distributed uniformly over a strip of width 2ε (Fig. 32). In this case all integrals in (28.5) are easily taken and we find the functions Φ_k' containing ε as a parameter. By allowing ε to tend to zero, we obtain

$$\left.\begin{aligned}
\Phi_1'(z_1) &= \frac{p}{2\pi i\Delta}\,\frac{\mu_3\lambda_2\lambda_3-\mu_2}{z_1},\\
\Phi_2'(z_2) &= \frac{p}{2\pi i\Delta}\,\frac{\mu_1-\mu_3\lambda_1\lambda_3}{z_2},\\
\Phi_3'(z_3) &= \frac{p}{2\pi i\Delta}\,\frac{\mu_2\lambda_1-\mu_1\lambda_2}{z_3}.
\end{aligned}\right\}\qquad(29.1)$$

It is just as easy to obtain formulas for the half-space loaded by tangential forces distributed uniformly along a straight line; the corresponding expressions for Φ_k' will not be given here.

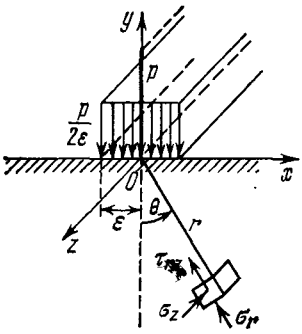

Fig. 32

To determine the stresses, it is necessary to substitute functions (29.1) (or the functions for tangential forces) in formulas (21.3), (21.4) and separate the real parts.

In the case of a load distributed uniformly along the straight line $y = 0$ (the z axis) it is more convenient to use a cylindrical co-ordinate system r, θ, z measuring the r co-ordinate from the z axis, and θ from the y axis produced (Fig. 32). The formulas for the case of a normal load are then obtained as

$$\left.\begin{aligned}
\sigma_r = &-\frac{p}{\pi r}\operatorname{Re}\left\{\frac{i}{\Delta}\left[(\mu_3\lambda_2\lambda_3-\mu_2)\frac{(\cos\theta+\mu_1\sin\theta)^2}{\sin\theta-\mu_1\cos\theta}+\right.\right.\\
&+(\mu_1-\mu_3\lambda_1\lambda_3)\frac{(\cos\theta+\mu_2\sin\theta)^2}{\sin\theta-\mu_2\cos\theta}+\\
&\left.\left.+\lambda_3(\mu_2\lambda_1-\mu_1\lambda_2)\frac{(\cos\theta+\mu_3\sin\theta)^2}{\sin\theta-\mu_3\cos\theta}\right]\right\},\\
\tau_{rz} = &-\frac{p}{\pi r}\operatorname{Re}\times\\
&\times\left\{\frac{i}{\Delta}\left[\lambda_1(\mu_3\lambda_2\lambda_3-\mu_2)\frac{\cos\theta+\mu_1\sin\theta}{\sin\theta-\mu_1\cos\theta}+\right.\right.\\
&+\lambda_2(\mu_1-\mu_3\lambda_1\lambda_3)\frac{\cos\theta+\mu_2\sin\theta}{\sin\theta-\mu_2\cos\theta}+\\
&\left.\left.+(\mu_2\lambda_1-\mu_1\lambda_2)\frac{\cos\theta+\mu_3\sin\theta}{\sin\theta-\mu_3\cos\theta}\right]\right\},\\
\sigma_\theta = \tau_{\theta z} = \tau_{r\theta} &= 0;
\end{aligned}\right\}\qquad(29.2)$$

The component σ_z is found from (25.5).

Thus, of the six stress components in cylindrical co-ordinates only three are not zero; for the general case of anisotropy the expressions obtained after separating the

real parts are rather unwieldy and we shall not write them out.

Note that all stress components are inversely proportional to the distance from the loaded line (the z axis). Points at which the stress σ_r on a cylindrical surface $r =$ constant is a maximum lie, in general, off the line of action of the forces $\theta = 0$, and points where $\sigma_r = 0$ do not lie on the boundary plane.

Consider, in greater detail, the plane problem (which, as has been previously mentioned, has two variants) for an orthotropic body. In the case of plane strain we have an elastic half-space loaded by forces distributed uniformly along an infinite straight line on the boundary plane. It is assumed that at each point there are three planes of elastic symmetry parallel to the co-ordinate planes, of which one is parallel to the boundary plane; the line along which the load is distributed (the z axis) is normal to another plane of elastic symmetry. In the case of generalized plane stress we consider a semi-infinite orthotropic plate loaded at its edge. In both cases the region of the body (in the xy plane) is a half-plane. Accordingly, the body under investigation will be called an elastic half-plane, as is done in the case of an isotropic medium (see, for example, [32]).

We first consider the action of a normal force p applied to the boundary of the half-plane. In the case of orthotropy formulas (29.2) are considerably simplified and, on separating the real parts, take the form

$$\left.\begin{aligned} \sigma_r &= -\frac{p}{\pi}(u_1+u_2)\sqrt{\beta_{11}\beta_{22}}\,\frac{\cos\theta}{r\mathscr{L}(\theta)}, \\ \sigma_\theta &= \tau_{r\theta} = \tau_{\theta z} = \tau_{rz} = 0. \end{aligned}\right\} \tag{29.3}$$

Here

$$\mathscr{L}(\theta) = \beta_{11}\sin^4\theta + (2\beta_{12}+\beta_{66})\sin^2\theta\cos^2\theta + \\ + \beta_{22}\cos^4\theta \tag{29.4}$$

is a positive quantity different from zero for all values of θ; u_1, u_2 are the roots of the equation

$$\beta_{11}u^4 - (2\beta_{12}+\beta_{66})u^2 + \beta_{22} = 0. \tag{29.5}$$

These roots are related to the roots of the equation $l_4(\mu) = 0$ by the expressions $u_1 = -i\mu_1$, $u_2 = -i\mu_2$, and hence may only be real or conjugate complex numbers; consequently, $u_1 + u_2$ is always a real number. In the case of plane strain β_{ij} are the reduced strain coefficients, $\beta_{ij} = a_{ij} - a_{i3}a_{j3}/a_{33}$; in the other case of the plane problem β_{ij} must be replaced by the corresponding coefficients a_{ij}. Note also that $\mathscr{L}(\theta)$ is equal to the reduced elastic constant β_{rr} for the radial direction r:

$$\mathscr{L}(\theta) = \beta_{rr}, \tag{29.6}$$

or, if generalized plane stress is under consideration, $\mathscr{L}$ is the reciprocal of Young's modulus for the radial direction:

$$\mathscr{L}(\theta) = \frac{1}{E_r}. \tag{29.7}$$

Formulas (29.3) show that the stress distribution produced in an elastic half-plane by a normal force is one which may be described as a radial or raylike distribution: on all planes normal to a radius vector r drawn in the xy plane from the point of application of the force there is a stress directed along r, and on planes passing through the radius vector (and normal to xy) no stresses occur.

The stress σ_r is a principal one, it is inversely proportional to the distance r, and for a given r = constant σ_r varies with θ according to a rather complex law; the stresses σ_θ and $\tau_{r\theta}$ are zero.

In the case of plane strain there is another stress component, σ_z; it acts on planes normal to the loaded line (i.e., in planes parallel to xy) and is numerically equal to

$$\sigma_z = -\sigma_r \frac{1}{a_{33}} (a_{13}\cos^2\theta + a_{23}\sin^2\theta). \tag{29.8}$$

Points at which the stress σ_r is the same (equal to some value σ_0) are situated on a fourth-order curve. The equation of the family of these curves is of the form

$$\beta_{11}x^4 + (2\beta_{12} + \beta_{66})x^2y^2 + \beta_{22}y^4 + \\ + \frac{p}{\pi\sigma_0}(u_1 + u_2)\sqrt{\beta_{11}\beta_{22}}\,(x^2 + y^2)\,y = 0. \tag{29.9}$$

All these curves are closed, symmetrical about the line of action of the force, and tangent al to the boundary of the half-plane at the point of application of the force O. In the case of a normal compressive force all curves situated in the half-plane correspond to negative σ_0, and only on the boundary $\sigma_0 = 0$; in this case they may be called isobars (lines of constant pressure). The material of the half-plane is compressed under the action of a compressive force; the

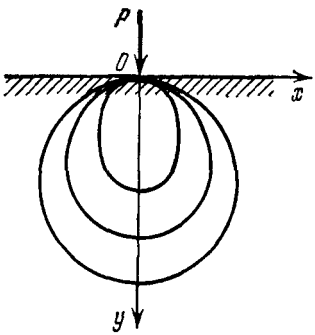

Fig. 33

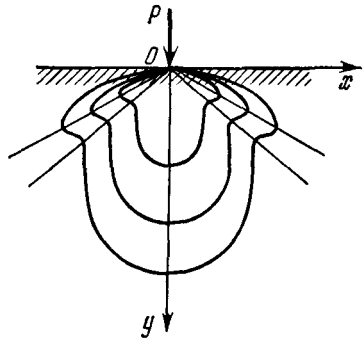

Fig. 34

boundary, with the exception of the point of application of the force O, which is a singular point, is a neutral line: at each point (except for the single point O) all stresses are zero.

The shape of the lines of constant stress σ_r depends on the relation among the reduced or true strain coefficients. Three basic types of curves may be mentioned.

(1) If the elastic constants satisfy the conditions

$$2\beta_{12} + \beta_{66} > 1.5\beta_{22} \tag{29.10}$$

or

$$2\beta_{12} + \beta_{66} = 1.5\beta_{22}, \quad 8\beta_{11} - 3\beta_{22} \geqslant 0, \tag{29.11}$$

the curves have the shape of ovals for which the line of action of the force is an axis of symmetry (Fig. 33). The stress σ_r attains the numerically greatest value on the line of action of the force.

(2) If, in addition to conditions (29.10) or (29.11), further conditions are fulfilled, namely

$$\left.\begin{aligned} &2\beta_{12}+\beta_{66}>4\beta_{11}, \\ &(2\beta_{12}+\beta_{66}-4\beta_{11})^2-4\beta_{11}(4\beta_{12}+2\beta_{66}-3\beta_{22})>0, \end{aligned}\right\} \quad (29.12)$$

the curves $\sigma_r = \sigma_0$ have symmetrical lateral projections and, depending on their length, the stress may attain the numerically greatest value, not under the force, but on the axes of the projections (Fig. 34).

(3) If

$$2\beta_{12} + \beta_{66} < 1.5\beta_{22} \quad (29.13)$$

or

$$2\beta_{12} + \beta_{66} = 1.5\beta_{22}, \quad 8\beta_{11} - 3\beta_{22} < 0, \quad (29.14)$$

the general nature of the curves $\sigma_r = \sigma_0$ is altered as shown in Fig. 35. Clearly, the stress σ_r is numerically greatest, not under the force, but on two symmetrical rays.

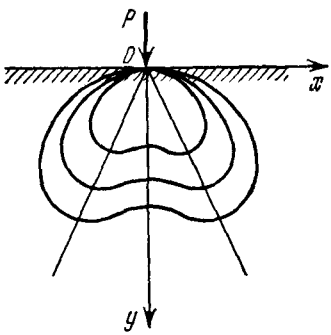

Fig. 35

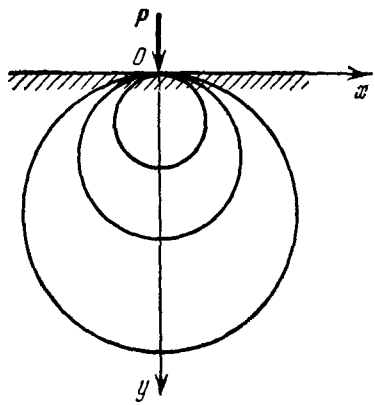

Fig. 36

For some relations among the constants, the curves may degenerate into ellipses with the major or minor axis directed along the line of action of the force. If the half-plane is isotropic, then

$$\beta_{11} = \beta_{22} = 0.5\,(2\beta_{12} + \beta_{66}), \quad u_1 = u_2 = 1, \quad (29.15)$$

and we obtain the classical solution of Flamant's problem [37]:

$$\sigma_r = -\frac{2p}{\pi}\frac{\cos\theta}{r}, \quad \sigma_\theta = \tau_{r\theta} = 0. \tag{29.16}$$

The lines of constant stress transform into circles (Fig. 36).

By using formulas (28.8), where $N = 0$, we can easily determine the stresses in a half-space due to tangential

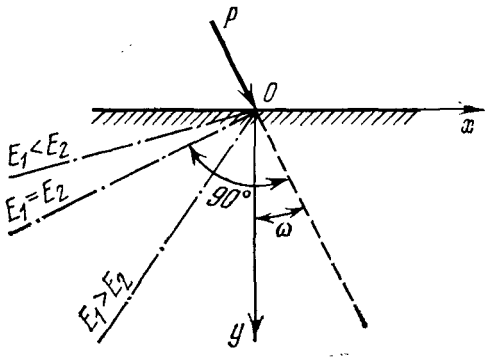

Fig. 37

forces t (per unit length) perpendicular to the z axis and distributed uniformly along this axis. Leaving out elementary intermediate computations, we give formulas for an orthotropic half-space in cylindrical co-ordinates:

$$\left.\begin{aligned} \sigma_r &= -\frac{t}{\pi}(u_1+u_2)\,\beta_{11}\frac{\sin\theta}{r\mathscr{L}(\theta)}, \\ \sigma_\theta &= \tau_{r\theta} = 0. \end{aligned}\right\} \tag{29.17}$$

By superimposing solutions (29.3) and (29.17), we obtain the stress distribution in an orthotropic half-space or in a corresponding plate due to a force p acting in the plane of elastic symmetry xy and making an angle ω with the y axis (Fig. 37):

$$\left.\begin{aligned} \sigma_r = &-\frac{p}{\pi}(u_1+u_2)\sqrt{\beta_{11}\beta_{22}}\,\frac{1}{r\mathscr{L}(\theta)}\times \\ &\times\left(\cos\omega\cos\theta+\sqrt{\frac{\beta_{11}}{\beta_{22}}}\sin\omega\sin\theta\right), \\ \sigma_\theta = \tau_{r\theta} &= 0. \end{aligned}\right\} \tag{29.18}$$

In the case of an oblique force there is a neutral line inside the half-plane, a straight line on which all stresses are zero. This line is perpendicular to the line of action of the force if $\beta_{11} = \beta_{22}$; otherwise it intersects the line of action of the force at an acute or obtuse angle (see Fig. 37).

If the half-plane is orthotropic, but one of the planes of elastic symmetry intersects the boundary at an arbitrary angle, or if it is not orthotropic, the solution for these cases is also easily obtained by Muskhelishvili's method [see (28.8)]. The case of a non-orthotropic half-plane has been investigated in [104]. We state, without derivation, the basic results for a half-space or a plate having, at each point, not three, but only one plane of elastic symmetry parallel to xy. In [104] the x axis is taken along the boundary and the y axis is directed into the region, i.e., the upper, and not the lower, half-plane is considered. We shall not change the directions of the axes and choose them as in [104]. Let

$$\mu_1 = \alpha + \beta i, \quad \mu_2 = \gamma + \delta i \quad (\beta > 0,\ \delta > 0)$$

be the complex parameters, the roots of the equation $l_4(\mu) = 0$ (Sec. 20), and let $\bar{\mu}_1$, $\bar{\mu}_2$ be their complex conjugates. We introduce the notation:

$$a = \alpha\delta + \gamma\beta, \quad b = (\alpha^2 + \beta^2)\,\delta + (\gamma^2 + \delta^2)\,\beta; \tag{29.19}$$

$$\mathscr{L}(\theta) = \beta_{11}\cos^4\theta + 2\beta_{16}\sin\theta\cos^3\theta + (2\beta_{12} + \beta_{66})\sin^2\theta\cos^2\theta + 2\beta_{26}\sin^3\theta\cos\theta + \beta_{22}\sin^4\theta \tag{29.20}$$

(the meaning of this quantity is the same as in the case of an orthotropic body, see formulas (29.6) and (29.7); the angle θ is measured from the y axis).

If the force is normal to the boundary, the stresses are determined by the formulas

$$\sigma_r = -\frac{p\beta_{11}}{\pi}\,\frac{a\sin\theta + b\cos\theta}{r\mathscr{L}(\theta)}, \quad \sigma_\theta = \tau_{r\theta} = 0. \tag{29.21}$$

In general, through the region of the body there passes a neutral line (straight line):

$$\tan\theta = -\frac{b}{a}. \tag{29.22}$$

In the case of a tangential force (directed along the boundary)

$$\sigma_r = -\frac{t\beta_{11}}{\pi}\frac{(\beta+\delta)\sin\theta + a\cos\theta}{r\mathcal{L}(\theta)}, \quad \sigma_\theta = \tau_{r\theta} = 0. \quad (29.23)$$

The angle of inclination of the neutral line is obtained by equating the numerator in (29.23) to zero.

In [104] a specific example is considered and families of curves of constant stress are constructed for a material with the following values of the ratios of β_{ij} (or a_{ij}):

$$\left.\begin{aligned} &\frac{\beta_{16}}{\beta_{11}} = 0.6, \quad \frac{2\beta_{12}+\beta_{66}}{\beta_{11}} = 0.35, \quad \frac{\beta_{26}}{\beta_{11}} = -0.731, \\ &\frac{\beta_{22}}{\beta_{11}} = 0.751; \qquad \mu_1 = 1.1 + 1.0i, \\ &\mu_2 = -0.5 + 0.3i. \end{aligned}\right\} \quad (29.24)$$

Figure 38 shows curves for the case of a normal force, and Fig. 39 for a tangential force.

Formulas (29.21) and (29.23) show that the qualitative picture of the stress distribution remains the same as in the case of an orthotropic half-plane, namely the distribution of stress on planes normal to the xy plane is a radial or ray-like one and the only non-zero stress σ_r is inversely proportional to the distance from the point of application of the force.* The curves of constant stress $\sigma_r = \sigma_0$ appear to be more complicated than for an orthotropic half-plane and do not, in general, exhibit any kind of symmetry.

30. Stress Distribution in an Elastic Homogeneous Space with a Cavity in the Form of an Elliptical Cylinder

Consider an infinite elastic space filled with a homogeneous material with anisotropy of the general kind having a cavity in the form of an infinite cylinder of elliptical section. Let the surface of the cavity be acted on by distributed forces normal to the generators of the cylinder and constant along the generators, and let body forces be absent.

The body is referred to a co-ordinate system x, y, z with the origin placed at the centroid of a cross section of the

* In the case of a half-space (plane strain) there is another component, σ_z, on planes parallel to xy, which is proportional to σ_r.

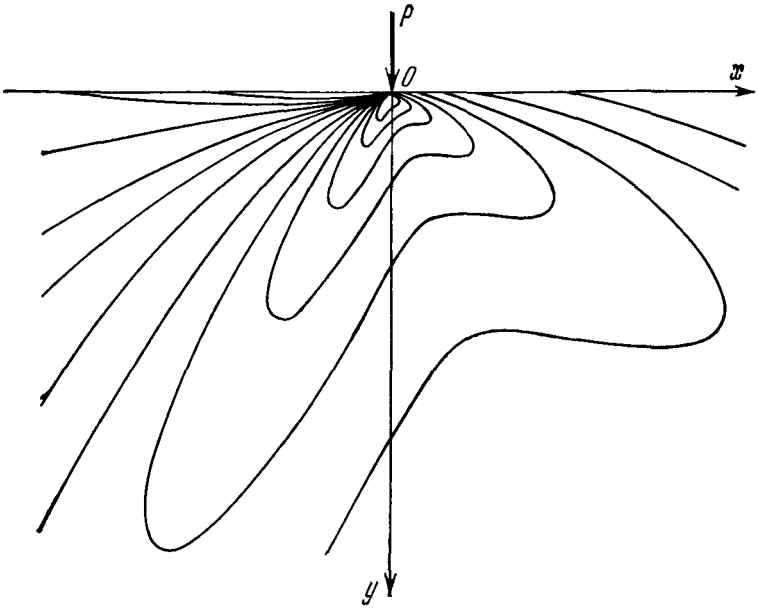

Fig. 38

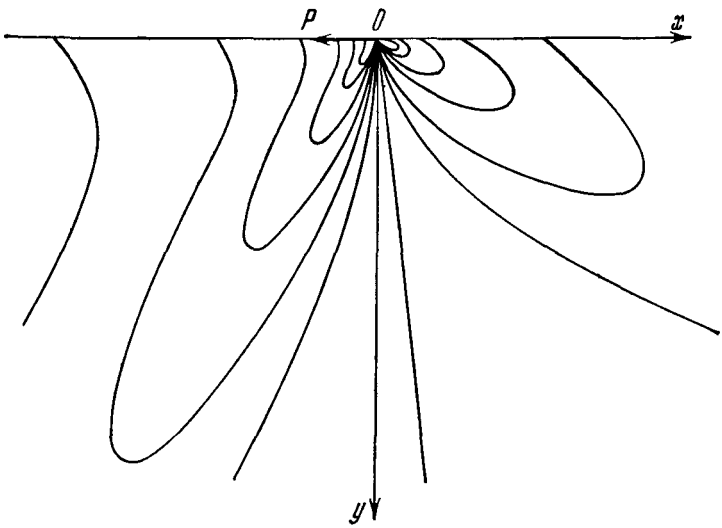

Fig. 39

cavity, the z axis directed along its axis, and the x, y axes along the principal axes of the ellipse (Fig. 40).

Let the projections of the external forces per unit area be denoted by X_n, Y_n. In general, these forces reduce to a resultant force vector with projections P_x, P_y and to a resultant couple M (per unit length of the generator).

At the section by the xy plane we have a region S in the form of an infinite plane with an elliptical cutout; the equation of its contour is

$$\frac{x^2}{a^2}+\frac{y^2}{b^2}=1 \qquad (30.1)$$

or

$$x = a\cos\vartheta, \qquad y = b\sin\vartheta \qquad (30.2)$$

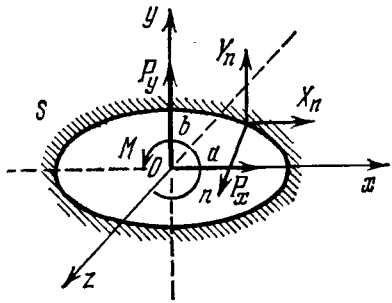

Fig. 40

($2a$, $2b$ are the principal axes of the ellipse, ϑ is a parameter varying from 0 to 2π on passing once round the contour). The regions S_1, S_2, S_3 are also planes with elliptical cutouts whose contours are given by the equations

$$\left.\begin{aligned} x_k &= a\cos\vartheta+\alpha_k b\sin\vartheta,\\ y_k &= \beta_k b\sin\vartheta \quad (k=1,\ 2,\ 3). \end{aligned}\right\} \qquad (30.3)$$

The forces X_n, Y_n are periodic functions of the parameter ϑ with period 2π; they are assumed to be expressed as Fourier series in $\cos m\vartheta$ and $\sin m\vartheta$. With prescribed forces the boundary conditions contain contour integrals of X_n, Y_n involving periodic functions of ϑ and terms proportional to ϑ. Representing the trigonometric series in complex form, we write the conditions for the functions $\Phi_k(z_k)$ as

$$\left.\begin{aligned} &2\,\mathrm{Re}\,(\Phi_1+\Phi_2+\lambda_3\Phi_3)=\\ &\quad=\frac{P_y}{2\pi}\vartheta+a_0+\sum_{m=1}^{\infty}(a_m e^{m\vartheta i}+\bar{a}_m e^{-m\vartheta i}),\\ &2\,\mathrm{Re}\,(\mu_1\Phi_1+\mu_2\Phi_2+\mu_3\lambda_3\Phi_3)=\\ &\quad=-\frac{P_x}{2\pi}\vartheta+b_0+\sum_{m=1}^{\infty}(b_m e^{m\vartheta i}+\bar{b}_m e^{-m\vartheta i}),\\ &\qquad 2\,\mathrm{Re}\,(\lambda_1\Phi_1+\lambda_2\Phi_2+\Phi_3)=c_0 \end{aligned}\right\} \qquad (30.4)$$

(a_m, b_m, and their complex conjugates are known constants; a_0, b_0, c_0 are arbitrary constants, which may be set equal to zero in the case under consideration). The stresses must vanish at infinity, and this requires that the derivatives $\Phi_k'(z_k)$ should tend to zero as $z_k \to \infty$.

The problem is solved as follows. We map all four regions, S, S_1, S_2, S_3, onto the outside of a unit circle $|\zeta| \geqslant 1$. In the present case when the regions S_k are the outsides of ellipses, which are in affine correspondence, this mapping can be effected so that to four points on the contours of the regions S and S_k corresponds one and only one point on the contour of a unit circle $\zeta = e^{\vartheta i}$, and this property holds for all values of ϑ.

On the basis of this property, we can solve a variety of problems for an infinite plane with an elliptical cutout: both the first and second fundamental problems, the problem of generalized plane strain and the plane problem.

We map conformally the regions S and S_k onto the outside of a unit circle. The mapping functions are of the form

$$z = \frac{a+b}{2}\zeta + \frac{a-b}{2}\frac{1}{\zeta}, \tag{30.5}$$

$$z_k = \frac{a-i\mu_k b}{2}\zeta_k + \frac{b+i\mu_k b}{2}\frac{1}{\zeta_k} \quad (k=1,\ 2,\ 3). \tag{30.6}$$

The functions reciprocal to (30.5) and (30.6) are

$$\zeta = \frac{z+\sqrt{z^2-a^2+b^2}}{a+b}, \tag{30.7}$$

$$\zeta_k = \frac{z_k+\sqrt{z_k^2-a^2-\mu_k^2 b^2}}{a-i\mu_k b}. \tag{30.8}$$

When x and y run along the contour of the ellipse S taking values (30.2), functions (30.7) and (30.8) take the values

$$\zeta = \zeta_1 = \zeta_2 = \zeta_3 = e^{\vartheta i}. \tag{30.9}$$

The expressions for Φ_k are sought in the form

$$\Phi_k(z_k) = A_k \ln \zeta_k + \sum_{m=1}^{\infty} A_{km}\zeta_k^{-m} \quad (k=1,\ 2,\ 3). \tag{30.10}$$

The coefficients A_{km} are determined from the boundary conditions (30.4), and A_k from the boundary conditions and

the conditions for single-valuedness of displacements (each of the displacements must be a single-valued, or, what is the same thing, periodic function of ϑ). The final expressions are obtained as

$$\left.\begin{aligned}
&\Phi_1(z_1) = A_1 \ln \zeta_1 + \\
&+\frac{1}{\Delta}\sum_{m=1}^{\infty}\left[(\mu_2-\mu_3\lambda_2\lambda_3)\,\bar{a}_m+(\lambda_2\lambda_3-1)\,\bar{b}_m\right]\zeta_1^{-m}, \\
&\Phi_2(z_2) = A_2 \ln \zeta_2 + \\
&+\frac{1}{\Delta}\sum_{m=1}^{\infty}\left[(\mu_3\lambda_1\lambda_3-\mu_1)\,\bar{a}_m+(1-\lambda_1\lambda_3)\,\bar{b}_m\right]\zeta_2^{-m}, \\
&\Phi_3(z_3) = A_3 \ln \zeta_3 + \\
&+\frac{1}{\Delta}\sum_{m=1}^{\infty}\left[(\mu_1\lambda_2-\mu_2\lambda_1)\,\bar{a}_m+(\lambda_1-\lambda_2)\,\bar{b}_m\right]\zeta_3^{-m}.
\end{aligned}\right\} \tag{30.11}$$

Here

$$\Delta = \mu_2 - \mu_1 + \lambda_2\lambda_3(\mu_1-\mu_2) + \lambda_1\lambda_3(\mu_3-\mu_2); \tag{30.12}$$

A_1, A_2, A_3 are coefficients that are found from the equations

$$\left.\begin{aligned}
&A_1+A_2+\lambda_3A_3-\bar{A}_1-\bar{A}_2-\bar{\lambda}_3\bar{A}_3=\frac{P_y}{2\pi i}, \\
&\mu_1A_1+\mu_2A_2+\mu_3\lambda_3A_3-\bar{\mu}_1\bar{A}_1-\bar{\mu}_2\bar{A}_2-\bar{\mu}_3\bar{\lambda}_3\bar{A}_3= \\
&\qquad\qquad = -\frac{P_x}{2\pi i}, \\
&\lambda_1A_1+\lambda_2A_2+A_3-\bar{\lambda}_1\bar{A}_1-\bar{\lambda}_2\bar{A}_2-\bar{A}_3=0, \\
&p_1A_1+p_2A_2+p_3A_3-\bar{p}_1\bar{A}_1-\bar{p}_2\bar{A}_2-\bar{p}_3\bar{A}_3=0, \\
&q_1A_1+q_2A_2+q_3A_3-\bar{q}_1\bar{A}_1-\bar{q}_2\bar{A}_2-\bar{q}_3\bar{A}_3=0, \\
&r_1A_1+r_2A_2+r_3A_3-\bar{r}_1\bar{A}_1-\bar{r}_2\bar{A}_2-\bar{r}_3\bar{A}_3=0.
\end{aligned}\right\} \tag{30.13}$$

In these equations p_k, q_k, r_k are the constants entering into the formulas for displacements [see (21.5) to (21.7)], $\bar{p}_k$, $\bar{q}_k$, $\bar{r}_k$ are their complex conjugates. The expressions for

the coefficients A_1, A_2, A_3 are too lengthy to be given here; we just state that if the resultant force vector is zero, all these coefficients vanish:

$$A_1 = A_2 = A_3 = 0, \quad \overline{A}_1 = \overline{A}_2 = \overline{A}_3 = 0.$$

The derivatives of the functions $\Phi_k(z_k)$ are determined from the formulas

$$\left.\begin{aligned}
\Phi_1'(z_1) &= \frac{1}{\sqrt{z_1^2 - a^2 - \mu_1^2 b^2}} \left\{ A_1 - \frac{1}{\Delta} \sum_{m=1}^{\infty} m \times \right. \\
&\qquad \left. \times [(\mu_2 - \mu_3\lambda_2\lambda_3)\,\overline{a}_m + (\lambda_2\lambda_3 - 1)\,\overline{b}_m]\,\zeta_1^{-m} \right\}, \\
\Phi_2'(z_2) &= \frac{1}{\sqrt{z_2^2 - a^2 - \mu_2^2 b^2}} \left\{ A_2 - \frac{1}{\Delta} \sum_{m=1}^{\infty} m \times \right. \\
&\qquad \left. \times [(\mu_3\lambda_1\lambda_3 - \mu_1)\,\overline{a}_m + (1 - \lambda_1\lambda_3)\,\overline{b}_m]\,\zeta_2^{-m} \right\}, \\
\Phi_3'(z_3) &= \frac{1}{\sqrt{z_3^2 - a^2 - \mu_3^2 b^2}} \left\{ A_3 - \frac{1}{\Delta} \sum_{m=1}^{\infty} m \times \right. \\
&\qquad \left. \times [(\mu_1\lambda_2 - \mu_2\lambda_1)\,\overline{a}_m + (\lambda_1 - \lambda_2)\,\overline{b}_m]\,\zeta_3^{-m} \right\}.
\end{aligned}\right\} \tag{30.14}$$

When there are planes of elastic symmetry normal to the generators, the body undergoes plane strain, and we obtain, instead of (30.11),

$$\left.\begin{aligned}
\Phi_1(z_1) &= A_1 \ln \zeta_1 + \frac{1}{\mu_1 - \mu_2} \sum_{m=1}^{\infty} (\overline{b}_m - \mu_2 \overline{a}_m)\,\zeta_1^{-m}, \\
\Phi_2(z_2) &= A_2 \ln \zeta_2 - \frac{1}{\mu_1 - \mu_2} \sum_{m=1}^{\infty} (\overline{b}_m - \mu_1 \overline{a}_m)\,\zeta_2^{-m}, \\
\Phi_3(z_3) &= 0.
\end{aligned}\right\} \tag{30.15}$$

After simple manipulation, we obtain equations for the coefficients A_1, A_2 and their complex conjugates:

$$\left.\begin{aligned}
&A_1+A_2-\bar{A}_1-\bar{A}_2=\frac{P_y}{2\pi i},\\
&\mu_1A_1+\mu_2A_2-\bar{\mu}_1\bar{A}_1-\bar{\mu}_2\bar{A}_2=-\frac{P_x}{2\pi i},\\
&\mu_1^2A_1+\mu_2^2A_2-\bar{\mu}_1^2\bar{A}_1-\bar{\mu}_2^2\bar{A}_2=-\frac{\beta_{16}}{\beta_{11}}\frac{P_x}{2\pi i}-\\
&\qquad\qquad -\frac{\beta_{12}}{\beta_{11}}\frac{P_y}{2\pi i},\\
&\frac{1}{\mu_1}A_1+\frac{1}{\mu_2}A_2-\frac{1}{\bar{\mu}_1}\bar{A}_1-\frac{1}{\bar{\mu}_2}\bar{A}_2=\\
&\qquad\qquad =\frac{\beta_{12}}{\beta_{22}}\frac{P_x}{2\pi i}+\frac{\beta_{26}}{\beta_{22}}\frac{P_y}{2\pi i}.
\end{aligned}\right\}\tag{30.16}$$

The determinant of this system is

$$d=\frac{4\beta\delta}{(\alpha^2+\beta^2)(\gamma^2+\delta^2)}\left[(\alpha-\gamma)^2+(\beta-\delta)^2\right]\left[(\alpha-\gamma)^2+(\beta+\delta)^2\right].\tag{30.17}$$

With distinct complex parameters we always have $d>0$, and hence the coefficients A_1, A_2 and their complex conjugates are uniquely determined from system (30.16). When the parameters are pairwise equal, i.e., $\mu_1=\mu_2$, $\bar{\mu}_1=\bar{\mu}_2$, we have $d=0$, but Eqs. (30.16) are then meaningless since in solving the problem we must proceed from the expression for the function F, not in the form of (26.4), but in the form of (26.6). This case will not be discussed here.

Below are given values of the coefficients $\bar{a}_m$, $\bar{b}_m$ for several special cases of loading. In all cases $A_1=A_2=A_3=0$, and each function Φ_k is represented by only one term of the series (see [26], Chap. 3).

(1) *Normal pressure distributed uniformly over the surface of a cavity* (Fig. 41):

$$\left.\begin{aligned}
&\bar{a}_1=-\frac{qa}{2},\quad \bar{b}_1=-\frac{qbi}{2},\\
&\bar{a}_m=\bar{b}_m=0\ \text{ for }\ m=2,\ 3,\ 4,\ \ldots
\end{aligned}\right\}\tag{30.18}$$

(q is the pressure per unit area).

(2) *Tangential forces distributed uniformly over the surface of a cavity and acting in planes parallel to xy* (Fig. 42):

$$\left.\begin{aligned} \bar{a}_1 = \frac{tbi}{2}, \quad \bar{b}_1 = -\frac{ta}{2}, \\ \bar{a}_m = \bar{b}_m = 0 \text{ for } m = 2, 3, 4, \ldots \end{aligned}\right\} \tag{30.19}$$

(t is the force per unit area).

In the following three cases when the surface of the cavity is not loaded and the forces are applied at a large

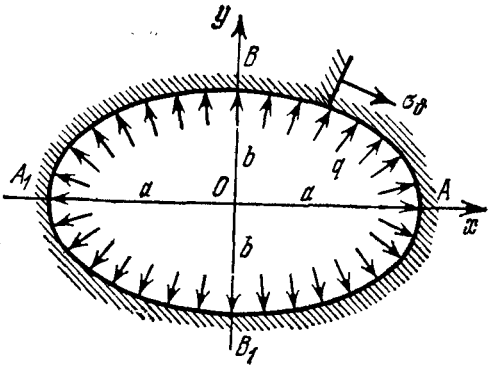

Fig. 41

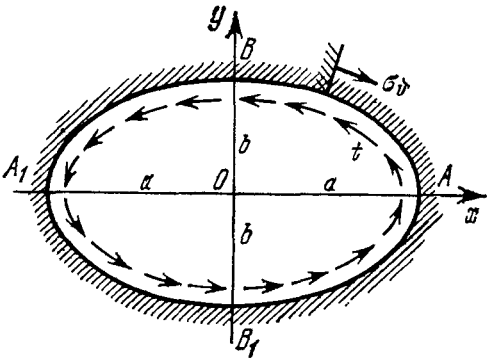

Fig. 42

distance from it (theoretically, at infinity), the stress components are determined from the formulas

$$\sigma_x = \sigma_x^0 + \sigma_x', \quad \sigma_y = \sigma_y^0 + \sigma_y', \ \ldots, \ \tau_{xy} = \tau_{xy}^0 + \tau_{xy}'. \tag{30.20}$$

The first terms (with zeros) are the stresses produced by the same forces in a continuous space (with no cavity); the second (primed) terms are the stresses determined by functions (30.11) or (30.15) (in all these cases $P_x = P_y = 0$, $A_1 = A_2 = A_3 = 0$).

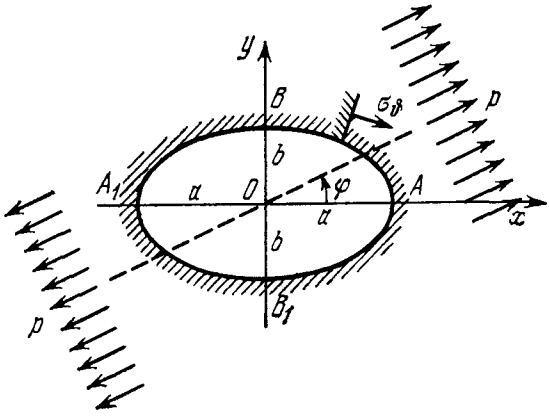

Fig. 43

(3) *Tension.* At a large distance from the cavity there are tensile forces acting at an angle φ to the axis $2a$ of the ellipse (Fig. 43).

In this case

$$\left.\begin{aligned} \sigma_x^0 = p\cos^2\varphi, \quad \sigma_y^0 = p\sin^2\varphi, \\ \tau_{xy}^0 = p\sin\varphi\cos\varphi, \end{aligned}\right\} \tag{30.21}$$

$$\left.\begin{aligned} &\tau_{yz}^0 = \tau_{xz}^0 = 0, \\ &\sigma_z^0 = -\frac{p}{a_{33}}(a_{13}\cos^2\varphi + a_{23}\sin^2\varphi + a_{36}\sin\varphi\cos\varphi); \end{aligned}\right\} \tag{30.22}$$

$$\left.\begin{aligned} \bar{a}_1 &= -\frac{p}{2}\sin\varphi\,(a\sin\varphi - ib\cos\varphi), \\ \bar{b}_1 &= \frac{p}{2}\cos\varphi\,(a\sin\varphi - ib\cos\varphi), \\ \bar{a}_m &= \bar{b}_m = 0 \quad (m = 2, 3, \ldots) \end{aligned}\right\} \tag{30.23}$$

(p is the tensile force per unit area, $a \geqslant b$ or $a < b$).

In particular, when tension is applied in the direction of the axis of length $2a$ ($\varphi = 0$),

$$\sigma_x^0 = p, \quad \sigma_y^0 = \tau_{xy}^0 = 0, \quad \tau_{yz}^0 = \tau_{xz}^0 = 0; \tag{30.24}$$

$$\sigma_z^0 = -p\frac{a_{13}}{a_{33}}; \tag{30.25}$$

$$\bar{a}_1 = 0, \quad \bar{b}_1 = \frac{pa}{2}. \tag{30.26}$$

(4) *Shear*. At a large distance from the cavity there are

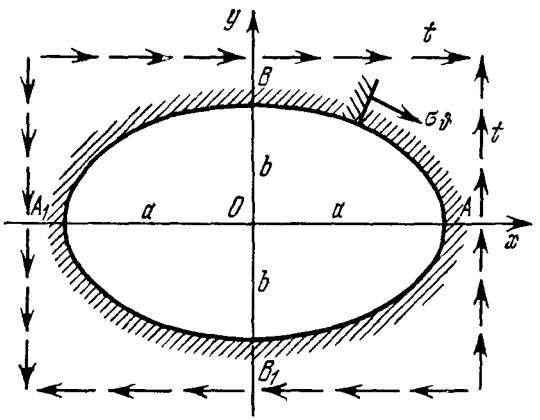

Fig. 44

tangential forces acting parallel to the principal axes of the ellipse (Fig. 44):

$$\left.\begin{aligned} &\sigma_x^0 = \sigma_y^0 = 0, \quad \tau_{xy}^0 = t, \\ &\tau_{yz}^0 = \tau_{xz}^0 = 0; \end{aligned}\right\} \tag{30.27}$$

$$\sigma_z^0 = -t\frac{a_{36}}{a_{33}}; \tag{30.28}$$

$$\left.\begin{aligned} &\bar{a}_1 = -\frac{tbi}{2}, \quad \bar{b}_1 = \frac{ta}{2}, \\ &\bar{a}_m = \bar{b}_m = 0 \text{ for } m = 2, 3, \ldots \end{aligned}\right\} \tag{30.29}$$

(t is the force per unit area).

(5) *Pure bending.* At a large distance from the cavity are applied normal forces that vary according to a linear law (Fig. 45):

$$\left.\begin{aligned} &\sigma_x^0 = ky, \quad \sigma_y^0 = \tau_{xy}^0 = 0, \\ &\tau_{yz}^0 = \tau_{xz}^0 = 0; \end{aligned}\right\} \tag{30.30}$$

$$\sigma_z^0 = -k\frac{a_{13}}{a_{33}}\,y; \tag{30.31}$$

$$\left.\begin{aligned} &\bar{a}_1 = \bar{b}_1 = 0, \quad \bar{a}_2 = 0, \quad \bar{b}_2 = \frac{kb^2}{8}, \\ &\bar{a}_m = \bar{b}_m = 0 \ \text{ for } \ m = 3,\ 4,\ 5,\ \ldots \end{aligned}\right\} \tag{30.32}$$

The second fundamental problem can be solved by the same method as the first one using functions Φ_k of the form

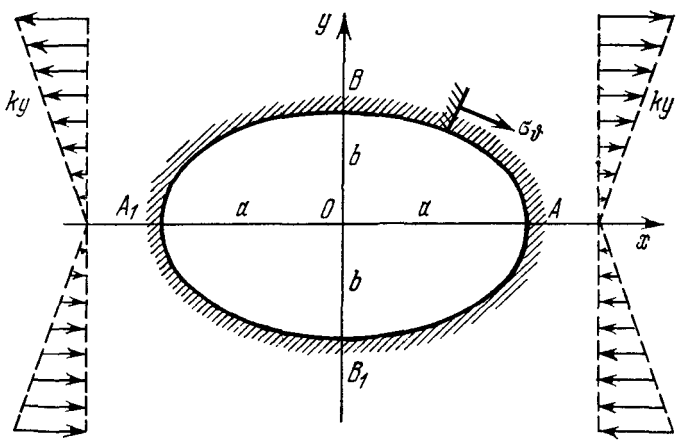

Fig. 45

of (30.11). For definiteness, it is necessary to prescribe the resultant force vector (P_x, P_y). The constants A_k are determined from Eqs. (30.13), and in the case of the plane problem from (30.16); the constants A_{km} are found from the boundary conditions.

31. Extension of a Homogeneous Orthotropic Plate with an Elliptical Hole

Consider, in greater detail, the elastic equilibrium of an orthotropic plate with an elliptical hole situated far from the edge, which is extended by uniformly distributed forces in one direction. Suppose that (1) one of the planes of elastic symmetry is parallel to the middle plane; (2) the directions of the principal axes of the ellipse x, y are not coincident with the principal directions of elasticity ξ, η; (3) the forces act at an arbitrary angle to the principal axes of the hole, the edge of the hole is not loaded and is not fixed. The plate is considered to be infinite, and the forces are assumed to be applied at infinity. The solution of this problem has been obtained by the author together with V.V. Soldatov in [85].

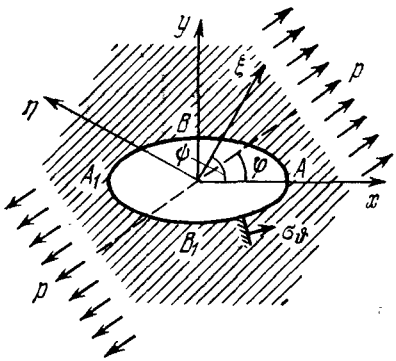

Fig. 46

Below is given the solution of this problem, which is represented schematically in Fig. 46. We introduce the following notation: $2a$, $2b$ = principal axes of the ellipse, $c = a/b$, p = force per unit area, φ = angle of inclination of forces to the principal axis $2a$ of the ellipse, ψ = angle between the directions of the principal axis $2a$ of the ellipse and of the principal axis of elasticity ξ.

We introduce the engineering constants: Young's moduli E_1, E_2 for the principal directions ξ, η, Poisson's ratios ν_1, ν_2 and the shear modulus G for the $\xi\eta$ plane. We further introduce the notation: a_{ij} = strain coefficients from the generalized Hooke's law equations written for a (non-principal) co-ordinate system xy, and m, k, n, defined by

$$m = \frac{E_1}{G} - 2\nu_1, \quad k = \sqrt{\frac{E_1}{E_2}}, \quad n = \sqrt{2k+m}. \tag{31.1}$$

Since m is expressed in terms of n ($m = n^2 - 2k$) and vice versa, we have two independent parameters, which will enter

into formulas for the stresses in an orthotropic plate; k and n will be termed the real generalized plane stress parameters for an anisotropic (or, more precisely, orthotropic) plate. The real plane strain parameters for an orthotropic medium are expressed in terms of the ratios of the corresponding reduced coefficients:

$$m=\frac{2\beta_{12}+\beta_{66}}{\beta_{11}}, \quad k=\sqrt{\frac{\beta_{22}}{\beta_{11}}}, \quad n=\sqrt{2k+m}. \tag{31.2}$$

In the case of an isotropic medium $k=1$, $n=2$; for an orthotropic medium $k\neq 1$ and $n\neq 2$ in general. On these grounds we may state that the pair of numbers (k, n) somehow characterize the deviation of a medium from the isotropic one, i.e., it is a kind of *measure of anisotropy* (in the case of the plane problem for an orthotropic medium). This question will be taken up in the next section.

We now introduce the symbols:

$$\left.\begin{aligned}
&K=0.5n\,(1-k)\sin 2\psi,\\
&L=0.5n\,[1+k+(1-k)\cos 2\psi],\\
&M=0.5\,[1-k^2+(1+k^2-m)\cos 2\psi]\sin 2\psi,\\
&N=0.25\,(1+k^2-m)\sin^2 2\psi-k,\\
&P=0.125\,[3+m+3k^2+4\,(1-k^2)\cos 2\psi+\\
&\qquad\qquad +(1+k^2-m)\cos 4\psi].
\end{aligned}\right\} \tag{31.3}$$

The generalized Hooke's law equations for the principal directions ξ, η, relating the components of strain and stress (averaged across the thickness), are written as

$$\varepsilon_\xi=\frac{1}{E_1}\,\sigma_\xi-\frac{\nu_2}{E_2}\,\sigma_\eta, \quad \varepsilon_\eta=-\frac{\nu_1}{E_1}\,\sigma_\xi+\frac{1}{E_2}\,\sigma_\eta, \tag{31.4}$$
$$\gamma_{\xi\eta}=\frac{1}{G}\,\tau_{\xi\eta}$$

and for the directions x, y as

$$\left.\begin{aligned}
\varepsilon_x&=a_{11}\sigma_x+a_{12}\sigma_y+a_{16}\tau_{xy},\\
\varepsilon_y&=a_{12}\sigma_x+a_{22}\sigma_y+a_{26}\tau_{xy},\\
\gamma_{xy}&=a_{16}\sigma_x+a_{26}\sigma_y+a_{66}\tau_{xy}.
\end{aligned}\right\} \tag{31.5}$$

The coefficients a_{ij} are expressed in terms of the principal (engineering) elastic constants on the basis of the general

formulas for the transformation of elastic constants as follows:

$$\left.\begin{aligned}
&a_{11}=\frac{P}{E_1}, \quad a_{22}=\frac{1}{E_1}[P+(k^2-1)\cos 2\psi],\\
&a_{12}=\frac{1}{E_1}[-\nu_1+0.25(1+k^2-m)\sin^2 2\psi],\\
&a_{66}=\frac{1}{E_1}\left[\frac{E_1}{G}+(1+k^2-m)\sin^2 2\psi\right],\\
&a_{16}=\frac{1}{2E_1}[1-k^2+(1+k^2-m)\cos 2\psi]\sin 2\psi,\\
&a_{26}=\frac{1}{2E_1}[1-k^2-(1+k^2-m)\cos 2\psi]\sin 2\psi.
\end{aligned}\right\} \tag{31.6}$$

By taking the equation of the contour in parametric form, i.e., assuming

$$x = a\cos\vartheta, \quad y = b\sin\vartheta \quad (a \geqslant b), \tag{31.7}$$

we introduce the notation for functions depending on the parameter ϑ:

$$l^2 = c^2\sin^2\vartheta + \cos^2\vartheta, \tag{31.8}$$

$$\begin{aligned}
S = E_1\,[&a_{11}c^4\sin^4\vartheta - 2a_{16}c^3\sin^3\vartheta\cos\vartheta +\\
&+(2a_{12}+a_{66})\,c^2\sin^2\vartheta\cos^2\vartheta -\\
&-2a_{26}c\sin\vartheta\cos^3\vartheta + a_{22}\cos^4\vartheta].
\end{aligned} \tag{31.9}$$

The only stress of interest to us is that at the edge of the hole, σ_ϑ, where, as a number of solved problems show, it is the greatest. The preceding section contains everything necessary to derive a formula for the stress σ_ϑ at the edge of the hole. Omitting the intermediate computations, we give the final formula for the stress at the very edge of the hole acting on planes normal to this edge:

$$\begin{aligned}
\sigma_\vartheta = \frac{pl^2}{S}\Big(&\{Nc\sin^2\varphi+(K+Mc)\sin\varphi\cos\varphi+\\
&+(L+Pc)\cos^2\varphi\}\,c\sin^2\vartheta-\{[MN+K(L+Pc)]\,c\sin^2\varphi+\\
&+[M(K+Mc)+Lc(L+Pc)-LN]\sin\varphi\cos\varphi+\\
&+(K+Mc)\,P\cos^2\varphi\}\frac{\sin\vartheta\cos\vartheta}{P}+\\
&+\{[K(K+Mc)+N(N-Lc)]\sin^2\varphi+\\
&+[MN+K(L+Pc)]\sin\varphi\cos\varphi+PN\cos^2\varphi\}\frac{\cos^2\vartheta}{P}\Big).
\end{aligned} \tag{31.10}$$

From this, when φ and ψ are equal to zero or $\pi/2$, we obtain expressions for the stresses for four basic cases when the hole is cut out so that the directions of the major and minor axes of the ellipse coincide with the principal axes of elasticity, and tension is applied in the direction of the major or minor axis of the ellipse. In particular, for tension in the direction of the minor axis ($\varphi = \pi/2$) we have

$$\sigma_\vartheta = \frac{pl^2}{S} k [-c^2 \sin^2 \vartheta + (k + cn) \cos^2 \vartheta] \quad (\psi = 0) \tag{31.11}$$

or

$$\sigma_\vartheta = \frac{pl^2}{S} [-kc^2 \sin^2 \vartheta + (1 + cn) \cos^2 \vartheta] \quad \left(\psi = \frac{\pi}{2}\right). \tag{31.12}$$

It is natural to expect that when $c > 1$ the maximum stress occurs at the ends of the major axis and is determined from either of the two formulas:

$$(\sigma_\vartheta)_{\vartheta=0} = p\left(1 + \frac{cn}{k}\right) \qquad (\psi = 0), \tag{31.13}$$

$$(\sigma_\vartheta)_{\vartheta=0} = p(1 + cn) \qquad \left(\psi = \frac{\pi}{2}\right). \tag{31.14}$$

It should be noted, however, that this statement may be untrue for some values of the parameters k and n, and the numerically greatest stress occurs at the ends of the minor axis instead of at the ends of the major axis; it is compressive and is found from either of the formulas:

$$(\sigma_\vartheta)_{\vartheta=\pi/2} = -pk, \tag{31.15}$$

$$(\sigma_\vartheta)_{\vartheta=\pi/2} = -p\frac{1}{k}. \tag{31.16}$$

Note that the stress concentration around the hole is greatly affected by the shear modulus G entering into the expression for the parameter n.

Below are given some results of calculations for a plate with the same elastic constants as for birch plywood (see Table 6). For brevity we shall refer to such a plate simply as a plywood plate. If the direction of the x axis coincides with that of maximum Young's modulus, the following

values of the complex and real parameters are obtained for it:

$$\left.\begin{aligned} \mu_1 &= 4.11i, & \mu_2 &= 0.343i, \\ k &= \sqrt{2} = 1.414, & n &= 4.453. \end{aligned}\right\} \tag{31.17}$$

If, however, the direction of the x axis coincides with that of minimum Young's modulus, the values obtained for the same plywood plate are

$$\left.\begin{aligned} \mu_1 &= 0.243i, & \mu_2 &= 2.91i, \\ k &= 0.707, & n &= 3.149. \end{aligned}\right\} \tag{31.18}$$

Tables 8 and 9 give values of the maximum tensile stress σ_{max} and values of the maximum compressive stress σ'_{max} on the contour of a hole in a plywood plate. The ratio of the semiaxes of the ellipse is taken to be $c = 2$. We have considered five cases of the orientation of forces in relation to the major axis of the ellipse and eight cases of the orienta-

Maximum Tensile Stresses σ_{max}/p in a Plywood Plate Table 8

$\varphi°$	$\psi° = 0$	30	45	60	90	120	135	150	180
0	3.23	2.76	2.67	2.21	2.57	2.21	2.67	2.76	3.23
30	3.10	4.92	4.64	4.96	2.55	3.80	4.00	3.76	3.10
45	3.85	5.55	5.84	6.93	6.19	4.28	4.98	5.18	3.85
60	5.58	5.47	6.52	8.20	7.55	4.24	5.33	6.14	5.58
90	7.20	5.77	5.52	7.72	9.91	7.72	5.52	5.77	7.20

Maximum Compressive Stresses σ'_{max}/p in a Plywood Plate Table 9

$\varphi°$	$\psi° = 0$	30	45	60	90	120	135	150	180
0	0.71	0.94	1.18	1.38	1.41	1.38	1.18	0.94	0.71
30	0.98	0.77	0.79	1.24	1.24	1.54	1.80	1.83	0.98
45	1.41	0.76	0.46	1.09	1.16	1.38	1.57	1.82	1.41
60	1.60	0.89	0.63	1.11	1.13	1.24	1.37	1.53	1.60
90	1.41	1.29	1.13	0.92	0.71	0.92	1.13	1.29	1.41

tion of the principal directions of elasticity. Two significant figures are retained after the decimal point; calculations with greater accuracy would be unnecessary taking into account the approximate nature of initial data (Table 6) and also the fact that we are mainly interested in the qualitative picture of stress distribution.

Below are given values of the maximum tensile stresses in an isotropic plate (Table 10).

Maximum Tensile Stresses in an Isotropic Plate Table 10

$\varphi°$	0	30	45	60	90
σ_{max}/p	2.00	2.86	3.54	4.29	5.00

For an isotropic plate, $\sigma'_{max} = p$ in all cases.

Figures 47 to 50 show the distribution of the stress σ_θ along the contour of a hole for four cases:

(1) $\varphi = \psi = 0$,
(2) $\varphi = 90°$, $\psi = 45°$,
(3) $\varphi = 90°$, $\psi = 0$,
(4) $\varphi = 30°$, $\psi = 60°$.

The values of the stresses are laid off from the contour of the hole on the prolongations of rays drawn from the centre through given points of the contour; the positive directions are indicated by arrows directed from the centre towards the periphery, the negative directions by arrows pointing to the centre. In each graph is given the loading scheme. For comparison, dashed lines show graphs for an isotropic plate.

Figure 51 illustrates the variation of σ_{max}/p (curve *1*) and of σ'_{max}/p (curve *2*) with ψ when the plate is extended along the minor axis of the hole. Figure 52 gives the variation of σ_{max}/p with the angle of inclination of the forces to the major axis for $\psi = 0°$ (curve *1*) and for $\psi = 90°$ (curve *2*).

By analysing the results obtained, we may draw the following conclusions for a plywood plate, which provide a basis for assessing the stress distribution along the contour of a hole in a plate with $k > 1$, $n > 2$.

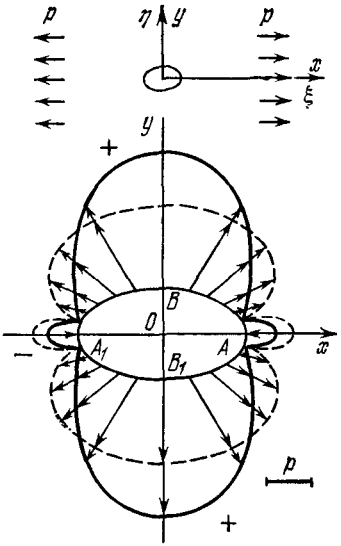

Fig. 47

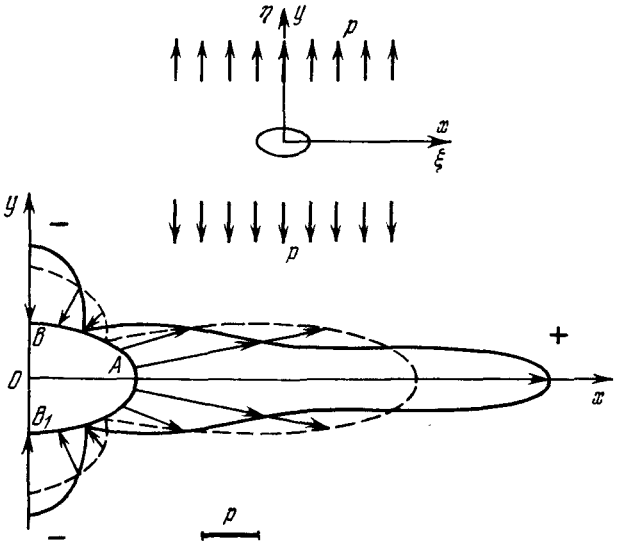

Fig. 48

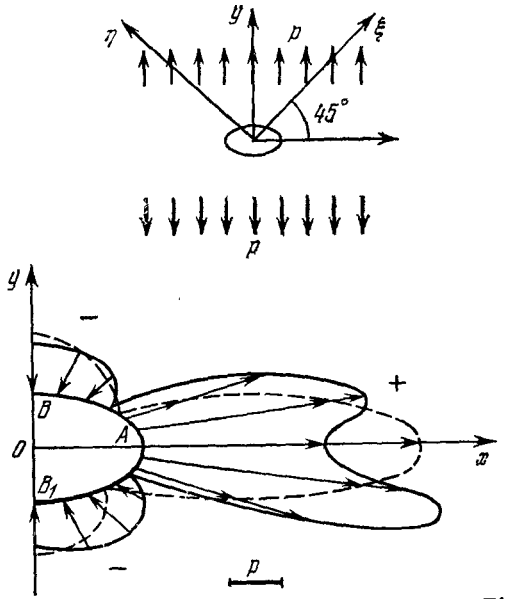

Fig. 49

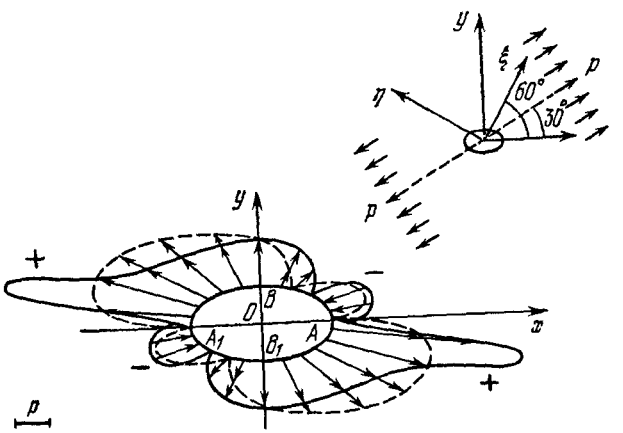

Fig. 50

As seen from the graphs in Figs. 47 to 50, the contour of the hole is broken down into four symmetrical portions with tensile and compressive stresses acting alternately; in all cases the maximum tensile stresses significantly exceed the magnitudes of the maximum compressive stresses. The maximum tensile stress in an anisotropic plate is greater

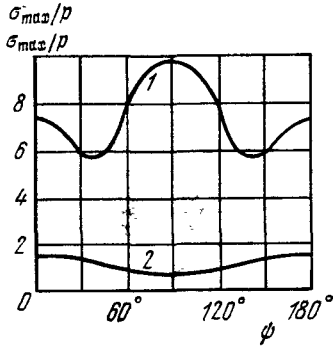

Fig. 51

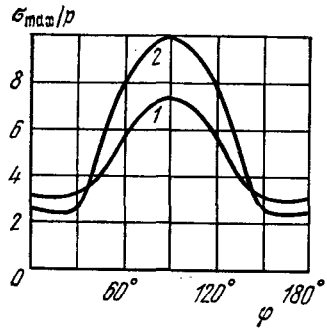

Fig. 52

than that in a similar isotropic plate. As Table 8 shows, of all possible tensile stresses the greatest one occurs in the case when the hole is cut out so that the direction of its minor axis coincides with a direction for which Young's modulus is maximum and tension is applied in the direction of the minor axis of the hole. In this case $\sigma_{max} = 9.91p$. Of the other cases considered, and presented in the tables, the unfavourable ones (as regards the maximum tensile stresses) are the following:

(1) $\psi = 60°$, $\varphi = 60°$, $\sigma_{max} = 8.20p$,

(2) $\psi = 60°$, $\varphi = 90°$, $\sigma_{max} = 7.72p$,

(3) $\psi = 90°$, $\varphi = 60°$, $\sigma_{max} = 7.55p$.

The most severely stressed regions are near the ends of the major axis (the angular distance from the x axis does not exceed 8°).

For tension in the direction of the minor axis of an elliptical hole, the least value of the maximum tensile stress in the cases discussed here is $\sigma_{max} = 5.52p$, and this value

occurs when the axes of the hole are inclined at an angle of 45° to the principal directions of elasticity.

As Table 9 shows, the numerically greatest compressive stresses are obtained for the following angles ψ and φ:

(1) $\psi = 135°$, $\varphi = 30°$, $\sigma'_{max} = 1.80p$,

(2) $\psi = 150°$, $\varphi = 30°$, $\sigma'_{max} = 1.83p$,

(3) $\psi = 150°$, $\varphi = 45°$, $\sigma'_{max} = 1.82p$.

As seen from the same table, the numerically least compressive stresses are $\sigma'_{max} = 0.71p$, and these values are obtained for $\psi = 0°$ and $\psi = 180°$, $\varphi = 0°$ and for $\psi = 90°$, $\varphi = 90°$.

The numerically greatest compressive stresses in all cases considered here are much less than the maximum tensile stresses.

A.S. Kosmodamianskii and his pupils have studied a large number of cases of an anisotropic plate weakened by many elliptical and circular holes, and they have also given approximate solutions for holes of other shapes whose edges are free or stiffened (see [20], where there is also an extensive list of references).

32. Some Cases of Stress Distribution in an Orthotropic Plate with a Circular Hole

Below are given the solutions to several special cases of the plane problem of a homogeneous orthotropic body for an infinite plane with a circular cutout, which is of practical interest. For definiteness, we shall consider a plate, i.e., generalized plane stress, and the results of calculations are given for a plate (though all formulas remain true, with suitable modifications, for plane strain). Everything necessary for the solution of the problems considered is found in Sec. 30. One of the planes of elastic symmetry is parallel to the middle plane xy, the x and y axes are normal to the other two. We use the notation of the preceding section.

Altogether we have considered six different cases of the elastic equilibrium of an infinite plate with a circular hole; they are all presented in the author's books [26] and [27]. For each case formulas are given for the stresses σ_θ on radial

planes at any point and at the most important points on the contour of a hole. For four cases we give tables of numerical values of the maximum and minimum stress factors for eight materials, viz. four kinds of plywood and four kinds or grades of glass-fibre reinforced plastics whose elastic constants are given in Sec. 9, and also graphs of stress distribution along the contour of a hole in a plate of birch plywood and, for comparison, graphs for an isotropic plate, which acts in the same conditions. Segments representing the magnitudes of the stresses σ_θ are laid off on the radii produced; the positive stresses are represented by arrows directed from the centre towards the periphery, the negative stresses by arrows pointing to the centre.* The loading schemes are shown in the upper right corner. In the other two cases we give only some results for a plate of birch plywood.

All formulas for the stresses contain the factor E_θ/E_1, where E_θ is Young's modulus for directions tangential to the contour of a hole. These functions are determined by the formulas

$$\frac{1}{E_\theta}=\frac{\sin^4\theta}{E_1}+\left(\frac{1}{G}-\frac{2\nu_1}{E_1}\right)\sin^2\theta\cos^2\theta+\frac{\cos^4\theta}{E_2}\,; \quad (32.1)$$

$$\frac{E_\theta}{E_1}=\frac{1}{\sin^4\theta+(n^2-2k)\sin^2\theta\cos^2\theta+k^2\cos^4\theta}\,. \quad (32.2)$$

Table 11 gives values of the real parameters k and n for eight anisotropic materials indicated in Sec. 9 with three significant figures. Two cases are considered for each material: (1) the direction of the x axis coincides with a direction for which Young's modulus is maximum ($E_1 = E_{\max}$) and (2) the x direction corresponds to a direction for which Young's modulus is minimum ($E_1 = E_{\min}$). If the parameters for the first case are denoted by k and n, and for the second by k' and n', it is easy to show that

$$k'=\frac{1}{k}\,, \quad n'=\frac{n}{k}=nk'. \quad (32.3)$$

* This method of plotting the graphs makes them particularly vivid; if segments representing the negative σ_θ are laid off inward from the circle, the vividity may be lost.

Real Parameters for Selected Anisotropic Materials **Table 11**

	Plywood				Glass-fibre reinforced plastics			
	Birch	БС-1	БФС	ФСФ	Filament-wound unidirectional	Orthogonally reinforced	СТЭТ	АСТТ(6)-C_2-0 and ПН-3
(1) $E_1 = E_{max}$								
k	1.414	1.138	1.217	1.119	2.018	1.172	1.107	1.169
n	4.453	3.788	3.636	3.943	3.672	3.081	2.566	2.904
(2) $E_1 = E_{min}$								
k'	0.707	0.879	0.822	0.894	0.496	0.853	0.903	0.856
n'	3.149	3.330	2.988	3.524	1.819	2.629	2.318	2.484

For an isotropic medium, as has already been noted, $k = 1$ and $n = 2$.

As Table 11 shows, the difference between the anisotropic and isotropic materials is most significant for birch plywood and filament-wound unidirectional glass-fibre reinforced plastic (particularly when $E_1 = E_{max}$). The glass-fibre reinforced plastics СТЭТ and АСТТ(6)-C_2-0 and ПН-3 differ comparatively little from the isotropic material in the values of the real parameters.

We now turn to the discussion of special cases.

(1) *Normal pressure distributed uniformly along the edge of a hole* (Fig. 53).

Denoting the pressure per unit area by q, we write an expression for the stress σ_θ on radial planes near the contour as a product, namely

$$\sigma_\theta = qf(\theta). \tag{32.4}$$

Here $f(\theta)$ is a non-dimensional function of the angle θ measured from the x axis and of the real parameters k and n:

$$f(\theta)=\frac{E_\theta}{E_1}\{n-k+n(k-1)\cos^2\theta+ \\ +[(k+1)^2-n^2]\sin^2\theta\cos^2\theta\} \quad (32.5)$$

The direction of the x axis corresponds to a direction for which Young's modulus is maximum ($E_1 = E_{\max}$).

In an isotropic plate $f = 1$, $\sigma_\theta = q$.

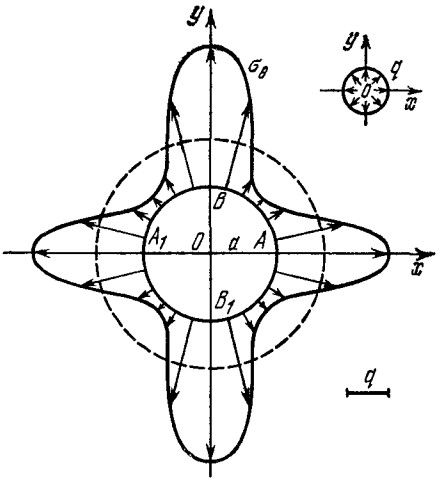

Fig. 53

At the points of intersection of the contour of the hole and the principal axes of elasticity A, A_1 and B, B_1 we have

$$\sigma_\theta = qf_A, \qquad \sigma_\theta = qf_B, \quad (32.6)$$

where

$$f_A=\frac{n-1}{k}, \qquad f_B=n-k; \quad (32.7)$$

f_A and f_B characterize stress concentration, and they may be termed the concentration factors. The values of f_A, f_B, the minimum stress factor $f_{\min}$ and the angle $\theta_{\min}$ in the first quadrant, which determines the point where the stress is minimum (to within 1°), are given in Table 12.

Stress Concentration Factors and Minimum Stress Factors for Anisotropic Materials under Uniformly Distributed Pressure **Table 12**

	Plywood				Glass-fibre reinforced plastics			
	Birch	БС-1	БФС	ФСФ	Filament-wound unidirectional	Orthogonally reinforced	СТЭТ	АСТТ(Б)-C_2-0 and ПН-3
f_A	2.44	2.45	2.17	2.63	1.32	1.78	1.41	1.63
f_B	3.04	2.65	2.42	2.82	1.65	1.91	1.46	1.74
f_{min}	0.08	0.13	0.22	0.08	—0.11	0.41	0.64	0.49
θ_{min}	49°	46°	47°	46°	53°	46°	46°	47°

The table shows that the plywood of all four grades behaves as a material with very pronounced anisotropy since the maximum stresses and particularly the minimum stresses differ greatly from the stress in the isotropic plate equal to q. For the glass-fibre reinforced plastics this difference is considerably less, but it might be well to point out the feature of the filament-wound unidirectional fibre-glass reinforced plastic for which the qualitative picture of stress distribution is different from that for the other seven materials, a feature that near the bisectors of the angles between the axes there are portions on the contour where the stress σ_θ is not tensile but compressive.

On deforming under the uniformly distributed forces q, the edge of the hole becomes elliptical; the magnitudes of the principal semiaxes of the ellipse are

$$\left.\begin{aligned} a' &= a\left[1-\frac{q}{E_1}(k-n-\nu_1)\right], \\ b' &= a\left[1-\frac{q}{E_1}(k-kn-\nu_1)\right]. \end{aligned}\right\} \qquad (32.8)$$

Figure 53 shows the stress distribution along the edge of a hole in a plate of birch plywood (solid line) and in an

isotropic plate (dashed line). The graphs in Fig. 53 show, in a particularly vivid way, how the anisotropy affects the stress distribution.

(2) *Tangential forces distributed uniformly along the edge of a hole.* Let forces t equivalent to a counterclockwise moment be distributed uniformly along the entire contour. The stress σ_θ near the edge of the hole is

$$\sigma_\theta = tf(\theta), \tag{32.9}$$

where

$$f(\theta) = \frac{E_\theta}{2E_1}\{(k-1)(k-n+1) + \\ + [(k+1)^2 - n^2]\cos 2\theta\}\sin 2\theta. \tag{32.10}$$

In an isotropic plate $f = \sigma_\theta = 0$; on radial planes near the edge of the hole there are only shearing stresses $\tau_{r\theta} = t$. In the orthotropic plate, however, the stress σ_θ is distributed along the edge according to a rather complex law, namely the entire contour of the hole is broken down into eight portions where tensile and compressive stresses act alternately; at the boundary points of the portions $\sigma_\theta = 0$. The maximum stress σ_{max} may exceed the magnitude of the tangential forces producing it. In particular, for a plate of birch plywood the maximum normal stress is approximately equal to $1.5t$.*

(3) *Extension at an angle to a principal direction.* Let a plate with a circular hole be extended by forces p (per unit area) applied at a large distance from the hole, uniformly distributed, and acting at an angle φ to a principal direction. As usual, the plate is considered as infinite and the forces are taken to be at infinity (Fig. 54).

In this case the stress near the contour of the hole is

$$\sigma_\theta = pf(\theta), \tag{32.11}$$

* This case is discussed in greater detail in [26] and [27], where there are graphs of stress distribution in a plywood plate.

where

$$f(\theta)=\frac{E_\theta}{E_1}\{-[\cos^2\varphi+(k+n)\sin^2\varphi]\,k\cos^2\theta+$$
$$+[(1+n)\cos^2\varphi-k\sin^2\varphi]\sin^2\theta-$$
$$-n(1+k+n)\sin\varphi\cos\varphi\sin\theta\cos\theta\}. \qquad (32.12)$$

In an isotropic plate acting in the same conditions

$$\sigma_\theta = p\,[1-2\cos 2(\theta-\varphi)]. \qquad (32.13)$$

The maximum stress in the isotropic plate is equal to $3p$ and occurs at the ends of a diameter perpendicular to the

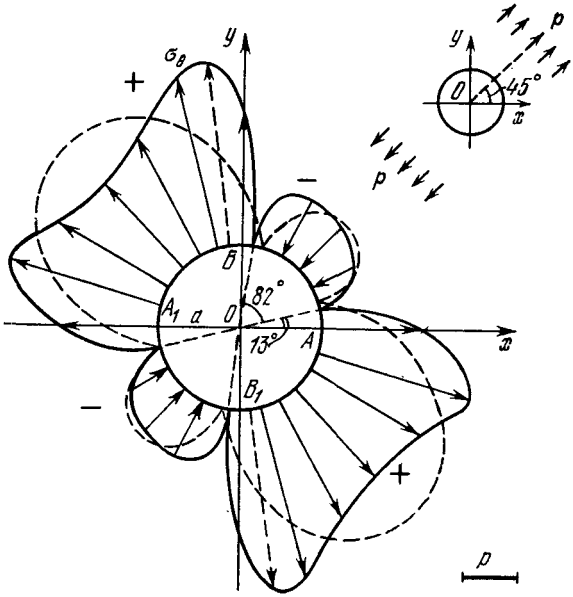

Fig. 54

tensile forces. In the orthotropic plate the distribution of the stress σ_θ along the contour of the hole is not symmetrical about the line of action of the forces; it is only symmetrical about the centre of the hole.

Figure 54 shows the distribution of the stress σ_θ in a plate of birch plywood extended at an angle of 45° to one of the principal directions of elasticity, x. The maximum stress in the plywood plate acting in these conditions differs very little from that in the isotropic plate; it is equal to $\sigma_{max} = 3.3p$. The points where $\sigma_\theta = 0$ are determined by the angles $\theta = 13°$, 82°, 193°, and 262°.

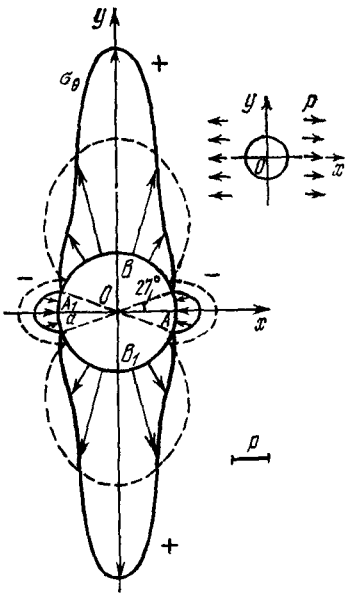

Fig. 55

(4) *Extension in a principal direction.* Let the forces p be directed parallel to the principal direction of elasticity x, i.e., $\varphi = 0'$ (Fig. 55). The stress σ_θ at the edge of the hole is then determined by formula (32.11), where

$$f(\theta) = \frac{E_\theta}{E_1}[-k\cos^2\theta + (1+n)\sin^2\theta]. \quad (32.14)$$

The stress distribution is symmetrical about the principal directions of elasticity. At the points A and A_1 at the ends of a diameter parallel to the forces and at the points B and B_1 at the ends of a diameter perpendicular to the forces, we have

$$f_A = -\frac{1}{k}, \quad f_B = 1 + n. \quad (32.15)$$

One of these values is a maximum for the whole plate, the other is a minimum; the maximum stress in a plate with very pronounced anisotropy may be not f_B but $|f_A|$. The non-dimensional quantities f_B and $|f_A|$ are termed the (tensile and compressive) stress concentration factors. Table 13 gives values of $|f_A|$ and f_B for eight orthotropic

Stress Concentration Factors for Selected Anisotropic Materials under Tension in Principal Direction Table 13

	Plywood				Glass-fibre reinforced plastics			
	Birch	БС-1	БФС	ФСФ	Filament-wound unidirectional	Orthogonally reinforced	СТЭТ	АСТТ(б)-С2-0 and ПН-3
(1) $E_1 = E_{max}$								
$\lvert f_A \rvert$	0.707	0.879	0.822	0.894	0.496	0.853	0.903	0.855
f_B	5.453	4.788	4.636	4.943	4.672	4.081	3.566	3.904
(2) $E_1 = E_{min}$								
$\lvert f_A \rvert$	1.414	1.138	1.217	1.119	2.018	1.172	1.107	1.169
f_B	4.149	4.330	3.989	4.524	2.819	3.629	3.318	3.484

plates considered above under tension in the directions of maximum and minimum Young's moduli.

As seen from the table, the tensile stress concentration factor for all eight materials is greater if the plate is extended in the direction of maximum Young's modulus, and in all cases $f_B > \lvert f_A \rvert$. The tensile stress concentration factors for the four glass-fibre reinforced plastics considered are less than those for the four kinds of plywood.

Figure 55 gives graphs of the distribution of σ_θ along the edge of a hole in a plate made of birch plywood, which is extended by forces in the direction of maximum Young's modulus (in the direction of the fibres of the jacket). The stress diagram for tension in the direction of minimum Young's modulus is very little different in nature from that represented in Fig. 55. It is obvious that if a plate with a circular hole is to be extended in a principal direction, it is more advantageous to do this so that the directions of forces are parallel to a direction for which Young's modulus is a minimum. Note that in the case of extension at an angle of 45° to a principal direction the maximum tensile stresses are even smaller (3.3*p*). This gives rise to

a number of problems of establishing an optimum direction of forces for which the resulting stress concentration is minimum of all possible ones for a given plate; these questions will not be discussed here.

(5) *Shear by forces arbitrarily oriented in relation to the principal directions of elasticity.* Let there be a rectangular plate with a small circular hole at the centre in which one of the principal directions of elasticity makes angles φ and $\pi/2 - \varphi$ with the sides. At the edges there are uniformly distributed, balanced tangential forces of intensity t acting, consequently, at the angles φ and $\pi/2 - \varphi$ to the principal directions; the contour of the hole is not loaded or fixed.

The plate is considered as infinite and the forces are taken to be at infinity. In this case near the contour

$$\sigma_\theta = tf(\theta), \tag{32.16}$$

where

$$f(\theta) = \frac{E_\theta}{2E_1}(1+k+n)\{-n\cos 2\varphi \sin 2\theta + \\ + [(k+1)\cos 2\theta + k - 1]\sin 2\varphi\}. \tag{32.17}$$

For an isotropic plate

$$f(\theta) = 4\sin 2(\theta - \varphi). \tag{32.18}$$

In particular, if the forces act at angles of 45° and 135° to the principal directions, formula (32.17) becomes

$$f(\theta) = \frac{E_\theta}{2E_1}(1+k+n)[(k+1)\cos 2\theta + k - 1]. \tag{32.19}$$

In this case the maximum stress in the orthotropic plate must occur at the points of intersection of the principal directions and the circle, viz. A, A_1 and B, B_1, for which

$$f_A = \frac{1+k+n}{k}, \quad f_B = -(1+k+n). \tag{32.20}$$

Table 14 gives values of the stress concentration factors f_A, $|f_B|$ for eight orthotropic materials. The x axis coincides with a direction for which Young's modulus is maximum. The table also gives an angle θ_0 in the first quadrant that determines a point where $\sigma_\theta = 0$.

Stress Concentration Factors for Shear at 45° **Table 14**

	Plywood				Glass-fibre reinforced plastics			
	Birch	БС-1	БФС	ФСФ	Filament-wound uni-directional	Orthogonally reinforced	СТЭТ	АСТТ(6)-С3-0 and ПН-3
f_A	4.856	5.209	2.811	5.418	3.315	4.488	4.221	4.339
$\lvert f_B \rvert$	6.867	5.926	5.853	6.062	6.690	5.253	4.673	5.073
θ_0	50°	47°	47°	46°	55°	47°	46°	47°

Here, too, the highest stress concentration occurs in a plate of birch plywood; the graph of stress distribution in this plate is shown in Fig. 56.

(6) *Shear by forces parallel to the principal directions.* Suppose a rectangular plate with a hole is cut out from an orthotropic sheet so that its sides are parallel to the principal directions of elasticity, and tangential forces of intensity t are uniformly distributed along these sides. Assuming the plate to be infinite, and taking the forces at infinity, we obtain, putting $\varphi = 0$ in (32.17),

$$f(\theta) = -\frac{E_\theta}{2E_1} n(1 + k + n) \sin 2\theta. \tag{32.21}$$

It is obvious that the stress takes the zero value at four points of the circle and attains the numerically greatest value at some symmetrical points of the four quadrants, namely

$$\sigma_{\max} = t f_{\max}. \tag{32.22}$$

The concentration factor $f_{\max}$ for an isotropic plate is 4, and for eight orthotropic materials it is found from Table 15, which also gives angles α in the first quadrant to which correspond the numerically greatest stresses (to within 1°). The x axis is parallel to the direction of maximum E.

In contrast to the case (5), here the concentration factors differ very little from that for the isotropic plate ($f_{\max} = 4$).

The greatest of the eight factors is f_{max} for filament-wound unidirectional glass-fibre reinforced plastic, followed by that for birch plywood. The fact worthy of notice is that the factor f_{max} for seven of the eight materials is less than the concentration factor for the isotropic plate. Hence, the

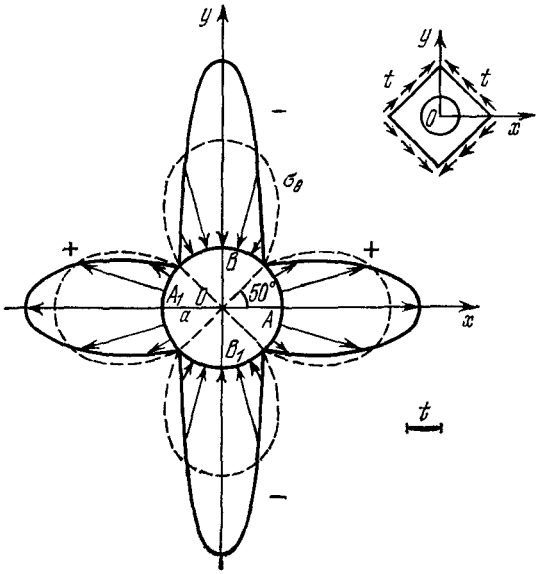

Fig. 56

obvious conclusion: the plate must be cut out so that the tangential forces will be parallel to the principal directions of elasticity.

Figure 57 shows a graph of stress distribution in a plate of birch plywood.

The foregoing formulas for the stress σ_θ near the edge of a hole show that this stress is determined by various combinations of two independent parameters, k and n. The first parameter is expressed in terms of the ratio of principal Young's moduli, and the second depends on the shear modulus as well and plays an important part in the determination of stress concentration. For a given plate, it may turn out that principal Young's moduli are equal

Stress Concentration Factors for Shear by Forces Parallel to Principal Directions Table 15

	Plywood				Glass-fibre reinforced plastics			
	Birch	БС-1	БФС	ФСФ	Filament-wound uni-directional	Orthogonally reinforced	СТЭТ	АСТТ(6)-С$_2$-0 and ПН-3
f_{max}	3.94	3.53	3.58	3.55	4.36	3.53	3.66	3.61
α	75°	71°	69°	72°	69°	61°	50°	61°

($E_1 = E_2$), and nevertheless, because of the shear modulus, the parameter n differs considerably from 2, which gives rise to very high stress concentration in each of the cases considered. Consequently, the anisotropy of a homogeneous anisotropic body acting in plane problem conditions is characterized, not by a single, but by two parameters or indices of anisotropy.* True, the pair of numbers (k, n) do not permit a quantitative estimate of the degree of anisotropy since it may happen that the stresses in an anisotropic body are numerically exactly the same as in an isotropic body despite the fact that k and n are very different from 1 and 2 (for example, in the cases of a plate without a hole under tension, shear or pure bending). Hence, it is desirable to choose the anisotropy indices so that they will give an estimate of the degree or intensity of anisotropy of different bodies. Here there are several possible ways of choosing the parameters or indices of anisotropy.

Referring only to the plane problem for a homogeneous rectilinearly anisotropic body, we may proceed from the simplest case of the elastic equilibrium of an infinite plate with a hole, namely uniaxial tension. The first anisotropy index, a_1, is taken to be the ratio of the maximum possible normal stress for a plate with a circular hole to the maximum stress in an isotropic plate acting in the same conditions. The second index, a_2, is taken to be the ratio of the minimum

* An exception is for rocks investigated in [50].

stress in the anisotropic plate in question to the minimum stress in the isotropic plate.

If an anisotropic plate with a circular hole is extended at an angle φ to a fixed axis x, the stress on the contour of the hole is given by the formula

$$\sigma_\theta = pf\,(\theta;\ \varphi). \tag{32.23}$$

If the angle φ is varied, both the maximum and minimum stresses change (see Figs. 54 and 55), and at certain values

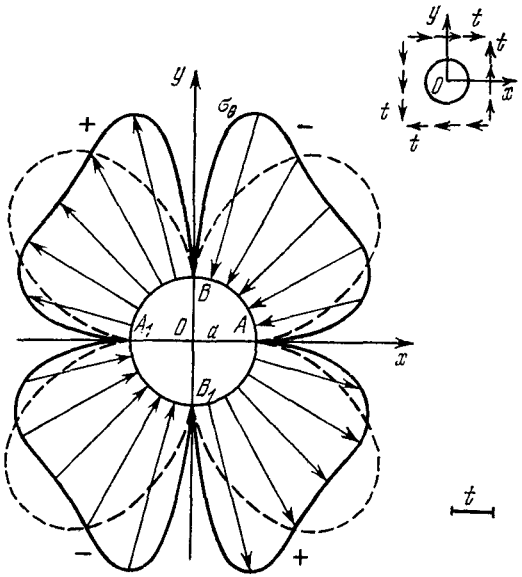

Fig. 57

of φ they reach the greatest and least of all possible values for a given plate. The anisotropy indices are determined by the formulas

$$a_1 = \frac{f_{\max}}{3}, \quad a_2 = |f|_{\min}. \tag{32.24}$$

In particular, for an orthotropic plate

$$a_1 = \frac{1+n}{3}, \quad a_2 = k, \tag{32.25}$$

these maximum and minimum values are reached when the plate is extended in the x direction, for which Young's modulus is maximum.

For birch plywood we obtain

$$a_1 = 2.151, \quad a_2 = 0.707.$$

For ACTT(б)-C_2-0 and ПН-3 glass-fibre reinforced plastic

$$a_1 = 1.635, \quad a_2 = 0.855.$$

For an isotropic body $a_1 = a_2 = 1$. Birch plywood and the above glass-fibre reinforced plastic must be considered as materials with sufficiently well developed anisotropy.

The expression for the factor $f(\theta; \varphi)$ for a non-orthotropic plate extended at an angle φ to the x axis can be obtained from the data of Sec. 30, and we shall not give it here.

Note that in other cases of elastic equilibrium (torsion, bending, deformation of bodies of revolution, etc.) the anisotropy indices must be chosen in a different way, but this question will not be discussed here.

33. Determination of Stresses in a Homogeneous Plate with an Elliptical or a Circular Core

Let there be an anisotropic plate of arbitrary shape with an elliptical hole, small compared with the plate dimensions and situated far from the edge, with a core of different material and of the same thickness soldered into it without positive or negative allowance. There are, in general, arbitrary forces distributed along the edge of the plate and acting in its plane; no external forces, apart from the contact forces exerted by the plate, are applied to the core. Body forces are absent.

As before, the region of the plate is considered as an infinite plane with an elliptical cutout and the external forces are taken to be applied at infinity.

Let the centre of the ellipse be chosen as the origin of co-ordinates, with the x and y axes directed along its principal axes (Fig. 58). The equation of the ellipse is assigned in parametric form:

$$x = a \cos \vartheta, \quad y = b \sin \vartheta. \tag{33.1}$$

All quantities for the core, such as stresses, displacements, strains, strain coefficients, will be primed to distinguish them from the same quantities for the plate.

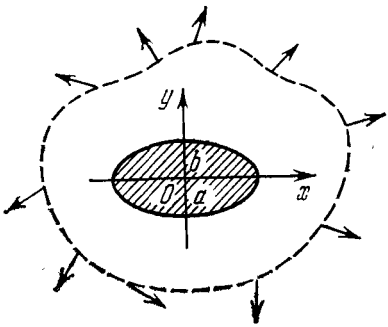

Fig. 58

If the plate is not orthotropic, but has, at each point, a plane of elastic symmetry parallel to the middle plane, the generalized Hooke's law equations for it relating the average values of the strain and stress components across the thickness are written as (bars above σ_x, σ_y, τ_{xy}, u, v denoting averaging are omitted)

$$\left.\begin{aligned} \varepsilon_x &= a_{11}\sigma_x + a_{12}\sigma_y + a_{16}\tau_{xy}, \\ \varepsilon_y &= a_{12}\sigma_x + a_{22}\sigma_y + a_{26}\tau_{xy}, \\ \gamma_{xy} &= a_{16}\sigma_x + a_{26}\sigma_y + a_{66}\tau_{xy}. \end{aligned}\right\} \tag{33.2}$$

The equations for the core (which also has a plane of elastic symmetry parallel to the middle plane) are of the form

$$\left.\begin{aligned} \varepsilon'_x &= a'_{11}\sigma'_x + a'_{12}\sigma'_y + a'_{16}\tau'_{xy}, \\ \varepsilon'_y &= a'_{12}\sigma'_x + a'_{22}\sigma'_y + a'_{26}\tau'_{xy}, \\ \gamma'_{xy} &= a'_{16}\sigma'_x + a'_{26}\sigma'_y + a'_{66}\tau'_{xy}. \end{aligned}\right\} \tag{33.3}$$

Assuming, as in all preceding cases, the strains to be small, we solve the problem approximately by superimposing the stresses in a plate of finite dimensions without a core and the stresses in an infinite plate with an elliptical hole loaded by external forces along its edge; these forces are chosen so as to fulfil the required conditions on the surface of contact between the core and the plate.

Let F^0, σ_x^0, σ_y^0, τ_{xy}^0, u^0, v^0 denote, respectively, the stress function, the components of stress, and the projections of displacement in a plate without a core, and let $\Phi_1(z_1)$, $\Phi_2(z_2)$ denote the functions of the complicated complex

variables in a plate with a hole. The formulas for the stresses and displacements in a plate with a core may then be represented as

$$\left.\begin{aligned} \sigma_x &= \sigma_x^0 + 2\mathrm{Re}\,[\mu_1^2\Phi_1'(z_1) + \mu_2^2\Phi_2'(z_2)], \\ \sigma_y &= \sigma_y^0 + 2\mathrm{Re}\,[\Phi_1' + \Phi_2'], \\ \tau_{xy} &= \tau_{xy}^0 - 2\mathrm{Re}\,[\mu_1\Phi_1' + \mu_2\Phi_2']; \end{aligned}\right\} \tag{33.4}$$

$$\left.\begin{aligned} u &= u^0 + 2\mathrm{Re}\,[p_1\Phi_1(z_1) + p_2\Phi_2(z_2)] - \omega y + u_0, \\ v &= v^0 + 2\mathrm{Re}\,[q_1\Phi_1 + q_2\Phi_2] + \omega x + v_0. \end{aligned}\right\} \tag{33.5}$$

Here

$$\left.\begin{aligned} p_k &= a_{11}\mu_k^2 + a_{12} - a_{16}\mu_k, \\ q_k &= a_{12}\mu_k + \frac{a_{22}}{\mu_k} - a_{26}, \\ &(k = 1, 2), \end{aligned}\right\} \tag{33.6}$$

ω, u_0, v_0 are constants characterizing rigid-body displacements in the xy plane, μ_k (complex parameters) are the roots of the equation

$$a_{11}\mu^4 - 2a_{16}\mu^3 + (2a_{12} + a_{66})\,\mu^2 - 2a_{26}\mu + a_{22} = 0, \tag{33.7}$$

which are assumed to be distinct.

The stresses in an elastic core are determined in terms of the function F' or in terms of two functions of the variables

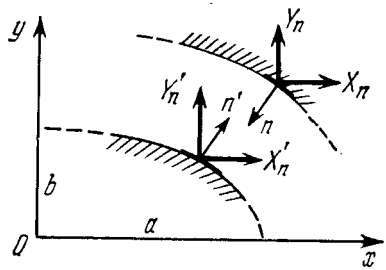

Fig. 59

$z_1' = x + \mu_1' y$, $z_2' = x + \mu_2' y$, where μ_1', μ_2' are the complex parameters of the core material.

The conditions at a point on the contact surface are written as (Fig. 59)

$$\left.\begin{aligned} X_n = -X'_n, \quad Y_n = -Y'_n, \\ u = u', \qquad\quad v = v'. \end{aligned}\right\} \tag{33.8}$$

On transforming the first two conditions by contour integration, we obtain equations to determine the functions Φ_1 and Φ_2:

$$\left.\begin{aligned} 2\mathrm{Re}\,[\Phi_1(z_1) + \Phi_2(z_2)] &= \frac{\partial(F' - F^0)}{\partial x} + c_1, \\ 2\mathrm{Re}\,[\mu_1\Phi_1 + \mu_2\Phi_2] &= \frac{\partial(F' - F^0)}{\partial y} + c_2, \\ 2\mathrm{Re}\,[p_1\Phi_1 + p_2\Phi_2] &= u' - u_0 + \omega y - u^0, \\ 2\mathrm{Re}\,[q_1\Phi_1 + q_2\Phi_2] &= v' - v_0 - \omega x - v^0. \end{aligned}\right\} \tag{33.9}$$

The procedure of solution is the same as in the case of an infinite plate with a hole whose edge is loaded by given forces. In the general case of loading the form of the complex potentials Φ_1, Φ_2 is known, namely

$$\left.\begin{aligned} \Phi_1(z_1) &= A_0 + A_1 \ln \zeta_1 + \sum_{m=1}^{\infty} A_m \zeta_1^{-m}, \\ \Phi_2(z_2) &= B_0 + B_1 \ln \zeta_2 + \sum_{m=1}^{\infty} B_m \zeta_2^{-m}, \end{aligned}\right\} \tag{33.10}$$

where

$$\zeta_k = \frac{z_k + \sqrt{z_k^2 - a^2 - \mu_k^2 b^2}}{a - i\mu_k b} \quad (k = 1, 2). \tag{33.11}$$

The simplest cases are the ones where the (normal and tangential) loads are uniformly distributed along the outer edge. Consider them. With the adopted simplifying assumptions we have

$$\sigma_x^0 = p, \quad \sigma_y^0 = q, \quad \tau_{xy}^0 = t \tag{33.12}$$

(known constants);

$$F^0 = \frac{1}{2} qx^2 - txy + \frac{1}{2} py^2 \tag{33.13}$$

An investigation shows that we can satisfy conditions (33.8) only when the stress distribution in the core is also uniform:

$$\sigma'_x = A, \quad \sigma'_y = B, \quad \tau'_{xy} = C \tag{33.14}$$

(unknown constants);

$$F' = \frac{1}{2} Bx^2 - Cxy + \frac{1}{2} Ay^2. \tag{33.15}$$

The additional stresses in the plate expressing the effect of the core are determined with the help of the functions

$$\left.\begin{aligned} \Phi_1(z_1) &= \frac{1}{2(\mu_1-\mu_2)} [(A-p)\, bi - (B-q)\, \mu_2 a + \\ &\qquad + (C-t)(i\mu_2 b - a)] \frac{1}{\zeta_1}, \\ \Phi_2(z_2) &= -\frac{1}{2(\mu_1-\mu_2)} [(A-p)\, bi - (B-q)\, \mu_1 a + \\ &\qquad + (C-t)(i\mu_1 b - a)] \frac{1}{\zeta_2}. \end{aligned}\right\} \tag{33.16}$$

Three unknowns, A, B, C (stresses in the core), and the fourth unknown (difference of rotations) $\omega' - \omega$ are found from the four equations (33.9). These equations will not be written out, nor will the resulting expressions for Φ_1, Φ_2, which are rather unwieldy.

These equations in expanded form are available in the author's paper [82] and book [27], and we shall not write them out for the case of a non-orthotropic body, but refer the interested readers to the cited works. In the case when the plate and core are orthotropic $(a_{16} = a_{26} = a'_{16} = a'_{26} = 0)$, the system of four equations (33.9) falls into two elementary systems given below:

$$\left.\begin{aligned} &A(n+\alpha_{11}c) - Bc(k+\alpha_{12}-\alpha'_{12}) = p(n+c) - qck, \\ &A[1+k(\gamma'_{12}-\gamma'_{12})] + B(nc-\gamma'_{22}k) = p + q(nc+k), \\ &C(n+k+\alpha_{12}) - \frac{\omega'-\omega}{a_{11}} = t(nc+k+\alpha_{12}), \\ &C[c+n+kc(\gamma_{12}+\gamma'_{66})] + \frac{kc}{a_{22}}(\omega'-\omega) = \\ &\qquad = t[c+n+kc(\gamma_{12}+\gamma_{66})]. \end{aligned}\right\} \tag{33.17}$$

Here we have used the notation:

$$\left.\begin{aligned} c=\frac{a}{b}, \quad \alpha_{ij}=\frac{a_{ij}}{a_{11}}, \quad \alpha'_{ij}=\frac{a'_{ij}}{a_{11}}, \\ \gamma_{ij}=\frac{a_{ij}}{a_{22}}, \quad \gamma'_{ij}=\frac{a'_{ij}}{a_{22}}; \end{aligned}\right\} \tag{33.18}$$

k and n are the real parameters of the plate (see Secs. 31 and 32). The solution of the problem is somewhat more complicated in cases where the core is soldered or fitted into a hole with negative allowance. The problem becomes considerably more complicated if the core is inserted into a hole and contact over some portions of the contour is not maintained.

34. Extension of an Orthotropic Plate with a Circular Core

As an example, consider a rectangular orthotropic plate with a circular hole in which is soldered or bonded without negative allowance a circular core of the same diameter made of a different orthotropic material, elastic or absolutely rigid (non-deformable). It is assumed that the principal directions of the plate and the elastic core are parallel to the sides of the plate. Two opposite sides are acted on by uniformly distributed normal forces reducing on either of the loaded sides to a tensile force (Fig. 60).

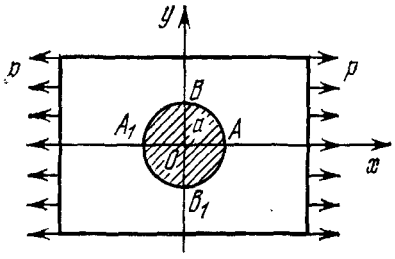

Fig. 60

The only cases of interest to us are the ones where the elastic moduli of the core are different from those of the plate. Such cases are practically infinite in number and there is no possibility of studying them all.

We restrict our investigation to a special case when the strain coefficients of the core are twice as large as the like coefficients of the plate ($a'_{ij} = 2a_{ij}$), and compare the results

obtained with those for an absolutely rigid core ($a'_{ij} = 0$, $a_{ij} \neq 0$) and for a plate with a hole not filled with anything ($a'_{ij} = \infty$, a_{ij} are finite). As in the problems previously solved, the elastic constants of the plate are assumed to be equal to those of birch plywood, and the region of the plate is considered as an infinite plane with a cutout, taking tensile forces at infinity. The solution of the problem may be found in [83] and [27] (p. 179).

In the case of uniform tension in the principal directions the stresses in the core are

$$\sigma'_x = A, \quad \sigma'_y = B, \quad \tau'_{xy} = C. \tag{34.1}$$

On determining the constants A and B from Eqs. (33.17) ($C = \omega' - \omega = 0$), we obtain, after elementary manipulation, formulas for the stresses in the core:

$$\left.\begin{aligned} \sigma'_x &= \frac{p}{\Delta}\left[n^2 + n(1+2k) + k - \nu_1\right], \\ \sigma'_y &= \frac{p}{\Delta}\left[\nu_2 k(1+n) - 1\right], \quad \tau'_{xy} = 0. \end{aligned}\right\} \tag{34.2}$$

Here p is the force intensity, $\nu_1 = \nu_{12}$, $\nu_2 = \nu_{21}$, and

$$\Delta = n^2 + 2n(1+k) + 3k - \nu_1(2 + \nu_2 k). \tag{34.3}$$

On determining the stresses in the plate, and transforming to cylindrical co-ordinates, we obtain, after some manipulation, on the contact surface:

$$\left.\begin{aligned} \sigma_r &= \frac{p}{2}\left[1 - \frac{b_3 + b_2}{\Delta} + \left(1 - \frac{b_3 - b_2}{\Delta}\right)\cos 2\theta\right], \\ \tau_{r\theta} &= \frac{p}{2}\left(\frac{b_3 - b_2}{\Delta} - 1\right)\sin 2\theta; \end{aligned}\right\} \tag{34.4}$$

$$\begin{aligned} \sigma_\theta = p\frac{E_\theta}{E_1}\Bigg\{&\left(1 + \frac{b_1}{\Delta}\right)\sin^6\theta + \Bigg[n^2 - 2k + \\ &+ \frac{-(k+n)\,b_1 - (1+2k)\,b_2 + (1+n)(2+k)\,b_3}{\Delta}\Bigg]\sin^4\theta\cos^2\theta + \\ &+ \left[k^2 + \frac{(1+2k)(k+n)\,b_2 - k(2+n)\,b_3 - k(1+n)\,b_4}{\Delta}\right] \times \\ &\times \sin^2\theta\cos^4\theta + \frac{b_4}{\Delta}k^2\cos^6\theta\Bigg\}. \end{aligned} \tag{34.5}$$

Here use has been made of the notation:

$$\left.\begin{aligned} b_1 &= n^2 - k + \nu_1 + (2 - \nu_1\nu_2)\, kn, \\ b_2 &= 1 - \nu_2 k\,(1 + n), \\ b_3 &= n - \nu_1 + (2 - \nu_1\nu_2)\, k, \\ b_4 &= -[\nu_2\,(n^2 + n - k) + 2 - \nu_1\nu_2]; \end{aligned}\right\} \tag{34.6}$$

E_θ/E_1 is determined by formula (32.2) (Sec. 32).

If the core is absolutely rigid (non-deformable), the formulas for the stresses in an orthotropic plate are obtained by determining the coefficients A, B from Eqs. (33.17), where we must set $a'_{ij} = \alpha'_{ij} = \gamma'_{ij} = 0$. The stresses at the contact surface are determined by the previous formulas (34.4) and (34.5), but the factors b_i and the divisor Δ are expressed in a different way:

$$\left.\begin{aligned} b_1 &= -(n^2 - k + \nu_1 + \nu_1\nu_2 kn), \\ b_2 &= -[1 - \nu_2 k\,(1 + n)], \\ b_3 &= -(n - \nu_1 + \nu_1\nu_2 kn), \\ b_4 &= \nu_2\,(n^2 + n - k + \nu_1); \end{aligned}\right\} \tag{34.7}$$

$$\Delta = n^2 - k\,(1 + \nu_1\nu_2) + 2\nu_1. \tag{34.8}$$

The stresses σ_r and $\tau_{r\theta}$ at the contact surface are obtained as

$$\left.\begin{aligned} \sigma_r = \frac{p}{2\Delta}\Big\{ & n^2 + n - k + \nu_1 + 1 - \nu_2 k\,(1 + n) + \\ & + [n^2 + n - k + \nu_1 - 1 + \nu_2 k\,(1 + n)] \cos 2\theta \Big\}, \\ \tau_{r\theta} = -\frac{p}{2\Delta} & [n^2 + n - k + \nu_1 - 1 + \\ & + \nu_2 k\,(1 + n)] \sin 2\theta. \end{aligned}\right\} \tag{34.9}$$

The formula for σ_θ is more complicated, and we shall not write it out. Below are given expressions for the stresses at the points of intersection of the contour line of the hole and the principal axes of elasticity A, A_1, B, B_1 (see Fig. 60):

$$(\sigma_r)_A = \frac{p}{\Delta}\,(n^2 + n - k + \nu_1), \qquad (\sigma_\theta)_A = \nu_2\,(\sigma_r)_A; \tag{34.10}$$

$$(\sigma_r)_B = \frac{p}{\Delta}\,[1 - \nu_2 k\,(1 + n)], \qquad (\sigma_\theta)_B = \nu_1 (\sigma_r)_B. \tag{34.11}$$

Stresses on the Contour of a Hole in a Plywood Plate under Uniaxial Tension Table 16

$\theta°$	Rigid core			Elastic core ($a'_{ij}=2a_{ij}$)			No core
	σ_r/p	$\tau_{r\theta}/p$	σ_θ/p	σ_r/p	$\tau_{r\theta}/p$	σ_θ/p	σ_θ/p
0	1.237	0	0.044	0.841	0	—0.062	—0.707
15	1.156	—0.299	0.093	0.784	—0.214	0.031	—0.340
30	0.937	—0.519	0.270	0.627	—0.371	0.231	0.069
45	0.698	—0.599	0.516	0.413	—0.429	0.488	0.404
60	0.338	—0.519	0.699	0.198	—0.371	0.784	0.964
75	0.119	—0.299	0.564	0.041	—0.214	1.186	2.571
90	0.039	0	0.003	—0.016	0	1.684	5.453

Table 16 gives numerical values of all three stresses on the contour of a hole in a plate of birch plywood with a circular rigid core and an elastic core for which $a'_{ij} = 2a_{ij}$ [83]. For comparison, the last column gives values of the stresses σ_θ in a plywood plate with a circular hole not filled with anything. Tension is applied in a direction for which Young's modulus is maximum.

Figure 61 shows graphs of the distribution of the stress σ_r along the edge of a hole in a plate of birch plywood (in the form of polar diagrams). A solid line represents the stress distribution in a plate with an elastic core ($a'_{ij} = 2a_{ij}$), a dashed line shows the stress distribution in the case of an absolutely rigid core. Figure 62 gives graphs of the stress σ_θ for a similar plate. A solid curve shows the stress distribution in a plate with an elastic core for which $a'_{ij} = 2a_{ij}$, dashed curves are the graphs of stresses in a plate with a rigid core and in a plate without a core.

If the core is rigid, the greatest of the three stresses is the stress σ_r at the ends of a diameter parallel to the tensile forces; it is equal to $\sigma_r = 1.237p$. If there is no core, the stress σ_θ is maximum; it is equal to $\sigma_\theta = 5.453p$, and occurs at the ends of a diameter perpendicular to the direction of the tensile forces. In the present special case of an elastic core ($a'_{ij} = 2a_{ij}$) the value of the maximum normal stress is intermediate between these two; it is equal to

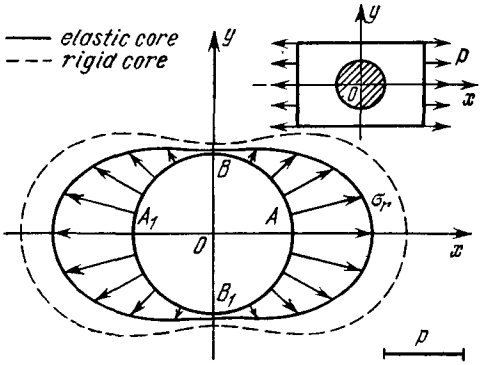
elastic core
rigid core
y
p
0
x
B
A1
A
σr
0
x
B1
p

Fig. 61

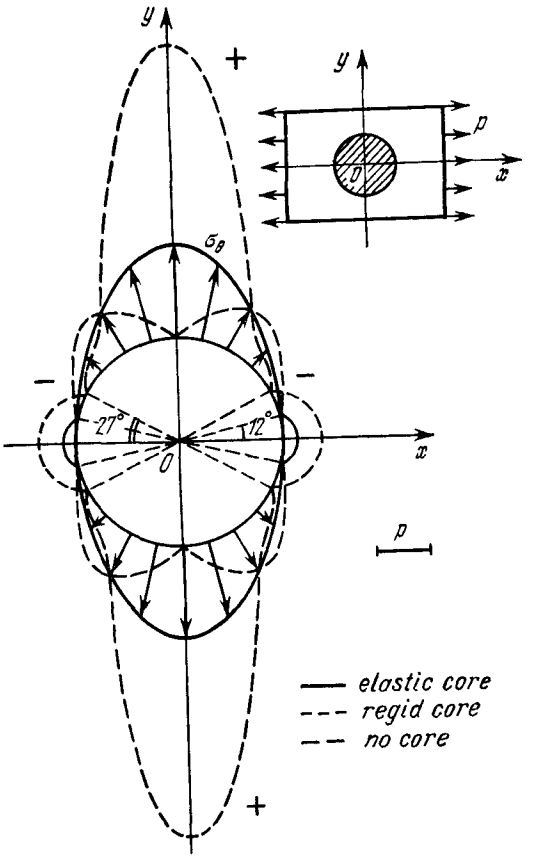
y
+
y
p
0
x
σθ
−
−
27°
12°
0
x
p
elastic core
regid core
no core
+

Fig. 62

Stresses on the Contour of a Hole in a Plywood Plate under Uniform Tension Table 17

θ°	σ_θ/p		
	Rigid core	Elastic core	No core
0	0.047	1.541	3.422
15	0.460	1.307	2.383
30	0.896	1.092	1.411
45	0.960	1.022	1.092
60	0.927	1.043	1.226
75	0.646	1.218	2.178
90	0.098	1.557	4.039

$\sigma_\theta = 1.684p$, and occurs at the ends of a diameter normal to the direction of the forces.

When the plate is extended in a direction for which the modulus E_1 is minimum, the qualitative picture of the

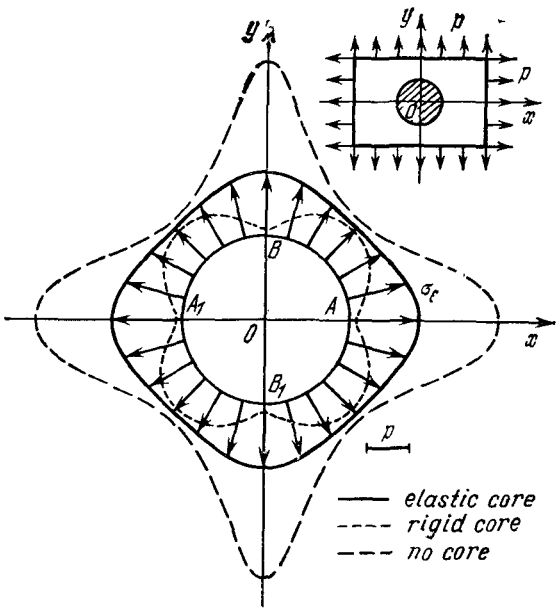

Fig. 63

stress distribution is unaltered; only the values of the stresses at particular points are changed. In a plate without a core $(\sigma_\theta)_{\max} = 4.153p$, and in a plate with an elastic core $(a'_{ij} = 2a_{ij})$ $(\sigma_\theta)_{\max} = 1.603p$. We may conclude that it is more advantageous to cut out a plate from a sheet of plywood so that the plate is extended in a direction for which Young's modulus is minimum. The problem is solved just as easily for all cases where $a'_{ij} = \lambda a_{ij}$ $(\lambda \neq 2)$.

We give, without derivation, the chief results for an infinite plywood plate with a circular core extended uniformly in all directions by normal forces, namely a table of values of the stress σ_θ on the contour (Table 17) and graphs (Fig. 63).

The other two components, σ_r and $\tau_{r\theta}$, play a secondary role in the general picture of the state of stress. The normal stress is distributed along the contour of a rigid core in a nearly uniform manner, and the shearing stress is small (not greater than $0.03p$).

35. Remarks Concerning the Solution of the Plane Problem and the Problem of Generalized Plane Strain for an Infinite Plane with a Cutout

The solutions described in Secs. 30 to 34 to problems for an infinite plane with an elliptical or a circular cutout (empty or filled) are exact. They are obtained in a very simple way, namely by Muskhelishvili's method based on the application of conformal mapping and power series. The solutions are just as easy to obtain if the technique of Cauchy-type integrals is used instead of power series (see [27], Chap. VI, Sec. 37).

It is much more difficult to solve the plane and the generalized plane problem for an infinite plane with a closed cutout of other than elliptical or circular shape. So far it has only been possible to obtain efficient approximate solutions by two routes: (1) by considering the contour of a cutout as differing very little from a circular or an elliptical one, and (2) by considering a body as low anisotropic. In both cases parameters are introduced which characterize the deviation of the cutout from an elliptical or a circular

one or the deviation of the body from an isotropic one, and the functions of complex parameters or the stress functions are sought in power series of these parameters. Thus, the problem is reduced either to a number of problems for an infinite plane with an elliptical cutout or to a number of problems for an isotropic medium (depending on the route chosen). During solution the powers or products of the parameters are dropped beginning with the second, third, fourth, and higher orders.

A variety of approximate solutions found both by the first and second routes are available in [27] (Chaps. VII and VIII) and in [82] and [84], where the author gives results of the calculation of stresses at the most important points for a plate with given elastic constants and a comparison of values of successive approximations. As yet, there has been no mathematically rigorous proof given for the convergence of such processes.

Ease of solution of the problem for a plane with an elliptical or a circular cutout is due to the fact that three, four and even any number of regions (a given region S and auxiliary regions S_k, $k = 1, 2, 3, \ldots$, obtained from S by affine transformation) can be simultaneously mapped onto the outside of a unit circle so that to points A and A_k on the contours of the regions S and S_k, which are in affine correspondence among themselves, corresponds *one and only one* point σ on the contour of the unit circle. Thus, the boundary values of the functions Φ_k can be expressed in terms of the single variable σ. The same property is possessed by infinite regions bounded by a second-order curve (parabola or hyperbola) and by a straight line, of course.

If the cutout in an infinite plane is not elliptical or circular, the simultaneous mapping of the regions S and S_k onto the outside of a unit circle subject to the above condition for affine correspondence becomes impossible, namely to points A and A_k that are in affine correspondence will correspond *different* points on the contour of a unit circle, σ and σ_k, which may coincide only for particular points on the contour of the region S. This considerably complicates the problem since the boundary values of Φ_k at the affine-corresponding points are not expressible in terms of a single

variable σ in a sufficiently simple way; if Φ_k are sought in the form of series, the systems obtained for their coefficients are infinite and fairly complex.

36. Radial Stress Distribution in a Continuously Non-homogeneous Elastic Half-plane

In Sec. 29 we have investigated the stress distribution in an elastic homogeneous orthotropic half-plane under the action of a concentrated force applied to the boundary, and we have pointed out some characteristic features of this distribution, namely that it is radial, the normal stress (in the plane of the cross section) being inversely proportional to the distance r from the point of application of the force. Let us see what the distribution looks like in a continuously non-homogeneous half-plane.

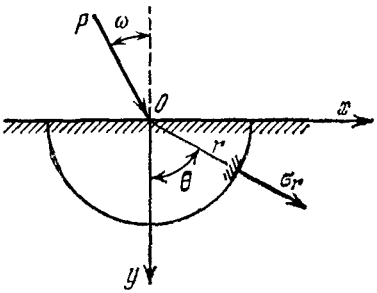

Fig. 64

There is an elastic continuously non-homogeneous half-space, which is in a state of plane strain under the action of forces uniformly distributed along a straight line on the boundary plane, or there is a plane-parallel plate subjected to a concentrated force. In both cases we obtain, at a section, an elastic half-plane, which is taken as the co-ordinate plane xy; in the present case it is more convenient to have the y axis directed into the half-plane and the polar angle θ measured from this axis. At the point of the boundary taken as the origin of co-ordinates, a concentrated force is applied at an arbitrary angle ω to the y axis (Fig. 64). We formulate the problem as follows: determine what the functions expressing the elastic characteristics should be for the stress distribution to be radial, and find this distribution.

Even in this narrow formulation the question is fairly extensive in the case of an anisotropic medium, and hence we further restrict the problem and consider only an isotropic half-plane [87].

Assuming that of the three stress components of the plane problem only σ_r is not zero, and $\sigma_\theta = \tau_{r\theta} = 0$, we write the fundamental system of equilibrium equations for an elastic body as

$$\frac{\partial \sigma_r}{\partial r} + \frac{\sigma_r}{r} = 0; \tag{36.1}$$

$$\left.\begin{aligned} &\frac{\partial u_r}{\partial r} = \frac{1}{E'}\sigma_r, \\ &\frac{1}{r}\frac{\partial u_\theta}{\partial \theta} + \frac{u_r}{r} = -\frac{\mu}{E'}\sigma_r, \\ &\frac{1}{r}\frac{\partial u_r}{\partial \theta} + \frac{\partial u_\theta}{\partial r} - \frac{u_\theta}{r} = 0. \end{aligned}\right\} \tag{36.2}$$

Here in the case of generalized plane stress $E' = E$, $\mu = \nu$ (Young's modulus and Poisson's ratio); in the case of plane strain

$$E' = \frac{E}{1-\nu^2}, \quad \mu = \frac{\nu}{1-\nu}. \tag{36.3}$$

From Eq. (36.1) we obtain

$$\sigma_r = \frac{f(\theta)}{r}, \tag{36.4}$$

where $f(\theta)$ is a function to be determined from Eqs. (36.2). By eliminating the displacements from them (by differentiation and subtraction, see Sec. 23), we finally obtain the equation

$$\frac{\partial^2}{\partial \theta^2}\left(\frac{f}{E'}\right) + \frac{f}{E'} - r\frac{\partial}{\partial r}\left(\frac{f}{E'}\right) - r^2\frac{\partial^2}{\partial r^2}\left(\frac{\mu f}{E'}\right) = 0, \tag{36.5}$$

The stress distribution will be radial if the function and the variable elastic characteristics satisfy Eq. (36.5).

Consider, in greater detail, a special case: Poisson's ratio is a constant, and the modulus E' is the product of a function of the polar co-ordinate r and a function of the co-ordinate θ:

$$E' = E_r(r)\, E_\theta(\theta). \tag{36.6}$$

Substituting (36.6) in Eq. (36.5), and separating the variables (which is possible), we obtain equations for the

function $1/E_r$ of the variable r and for the function f/E_θ of the variable θ:

$$\mu\left(\frac{1}{E_r}\right)''_r+\frac{1}{r}\left(\frac{1}{E_r}\right)'_r+\frac{n^2-1}{r^2}\frac{1}{E_r}=0, \tag{36.7}$$

$$\left(\frac{f}{E_\theta}\right)''+n^2\frac{f}{E_\theta}=0, \tag{36.8}$$

where

$$n=\sqrt{(1-\alpha)(1+\mu\alpha)}, \tag{36.9}$$

α is an arbitrary (real) constant. By integrating (36.7) and (36.8), we obtain

$$\frac{1}{E_r}=C_1r^\alpha+C_2r^{-\alpha+1-1/\mu}; \tag{36.10}$$

$$\frac{f}{E_\theta}=A\cos n\theta+B\sin n\theta. \tag{36.11}$$

We thus find a modulus E' providing a radial distribution of stress:

$$E'=\frac{E_\theta}{C_1r^\alpha+C_2r^{-\alpha+1-1/\mu}}, \tag{36.12}$$

where C_1, C_2 are arbitrary (given) constants not vanishing simultaneously, E_θ is an arbitrary function of the angle; expression (36.12) has a definite physical meaning only when it is positive. The stress σ_r for n real is determined by the formula

$$\sigma_r=\frac{E_\theta}{r}(A\cos n\theta+B\sin n\theta); \tag{36.13}$$

this is true when the radicand in (36.9) is positive. The constants A and B are determined from the conditions for the equilibrium of a semicircle of arbitrary radius r cut out from the half-plane:

$$\left.\begin{aligned}&\int_{-\pi/2}^{\pi/2}\sigma_r\sin\theta r\,d\theta+p\sin\omega=0,\\&\int_{-\pi/2}^{\pi/2}\sigma_r\cos\theta r\,d\theta+p\cos\omega=0.\end{aligned}\right\} \tag{36.14}$$

If n happens to be pure imaginary (since α may be any real number), the cosine and sine in formula (36.13) must be replaced by the corresponding hyperbolic cosine and sine. Finally, if $\alpha = 1$ or $\alpha = -1/\mu$, then $n = 0$, and instead of (36.13) we have the formula

$$\sigma_r = \frac{E_\theta}{r}(A\theta + B). \tag{36.15}$$

We now consider the case when the modulus E' varies as some power m of the distance y from the boundary of the half-plane:

$$E' = E_m y^m = E_m r^m \cos^m \theta \qquad (E_m = \text{constant}). \tag{36.16}$$

This relation is obtained by setting $C_1 = 1$, $C_2 = 0$, $\alpha = -m$, and $E_\theta = E_m \cos^m \theta$ in (36.12).

The stress is determined by the formula

$$\sigma_r = \frac{\cos^m \theta}{r}(A \cos n\theta + B \sin n\theta), \tag{36.17}$$

where

$$n = \sqrt{(1+m)(1-\mu m)}. \tag{36.18}$$

Let the modulus E' vary as the distance from the boundary ($E' = E_1 y$) acted on by a normal force p, and let the material be incompressible ($\nu = 0.5$). In the case of generalized plane stress $m = 1$, $\mu = 0.5$, $n = 1$. The final formula for the stress is of the form

$$\sigma_r = -0.75p\frac{\cos^2 \theta}{r}. \tag{36.19}$$

The lines of constant stress (isobars) are drop-shaped (Fig. 65).

If the modulus varies inversely as the distance from the boundary ($E' = E_{-1}/y$) and the force is applied normally to the boundary, the situation is quite different: the stress is determined by the formula

$$\sigma_r = -\frac{P}{\pi y}, \tag{36.20}$$

and the lines of constant stress are unclosed, namely they are straight lines parallel to the boundary.

The contents of the present section dealing with only several cases give an idea of the extensiveness of the field of science under consideration and of the variety of stress distributions in a continuously non-homogeneous medium. The various cases of distributions are practically infinite in number as are all possible specifications of elastic characteristics as functions of position. This is also true of the following problem for a non-homogeneous body discussed in Sec. 37.

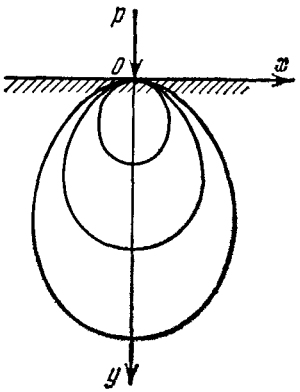

Fig. 65

N.A. Rostovtsev has given the general solution of the problem of radial stress distribution by using methods of modern mathematics, from which all solutions of this section are obtained as special cases. Unfortunately, because of limited space we cannot present here these highly interesting results and have to refer the reader to [109].

37. Extension and Bending by Moments of a Rectangular Plate

The problem of a homogeneous bar with rectilinear anisotropy extended by an axial force and bent by moments has quite an elementary solution (Chap. 2). But the same problem becomes considerably more complicated if the bar is continuously non-homogeneous. Consider, briefly, one of the simplest cases of a non-homogeneous bar.

Let there be a bar in the form of a rectangular plate of narrow rectangular section, elastic and continuously non-homogeneous, whose long sides are free from forces and restraints and short sides (ends) are loaded by identical forces reducing to an axial force P and a moment M acting in the middle plane, which is taken as the xy plane. Suppose that the bar is orthotropic and its elastic characteristics do

not vary across the thickness; one end is assumed to be fixed (Fig. 66).

Let the length, thickness, and depth be denoted by l, h, and b, respectively; the force P and the moment M are calculated per unit thickness. In the case under consideration it may be assumed that the state of stress is generalized

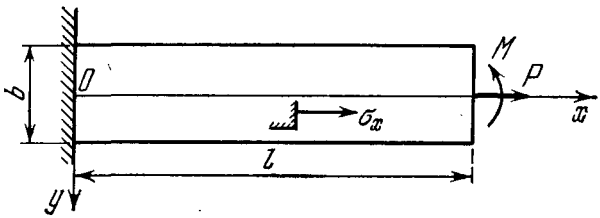

Fig. 66

plane stress; bars above the components of stress and displacement denoting averaging across the thickness are omitted throughout.

Suppose that in a non-homogeneous bar, as in a homogeneous one, only one component, σ_x, is not zero, and $\sigma_y = \tau_{xy} = 0$; σ_x is a function of y only. The generalized Hooke's law equations give three equations for the average displacements and stresses:

$$\frac{\partial u}{\partial x} = \frac{\sigma_x}{E_1}, \quad \frac{\partial v}{\partial y} = -\frac{\nu_1}{E_1}\sigma_x, \quad \frac{\partial u}{\partial y} + \frac{\partial v}{\partial x} = 0. \tag{37.1}$$

From the first two it follows that*

$$u = \sigma_x \int \frac{dx}{E_1} - \omega y + u_0, \quad v = -\int \frac{\nu_1 \sigma_x}{E_1} dy + \omega x + v_0. \tag{37.2}$$

The third equation, when differentiated with respect to x and y, gives an equation relating Young's modulus, Poisson's ratio, and the stress:

$$\frac{\partial^2}{\partial y^2}\left(\frac{\sigma_x}{E_1}\right) - \sigma_x \frac{\partial^2}{\partial x^2}\left(\frac{\nu_1}{E_1}\right) = 0. \tag{37.3}$$

* Here we introduce, at the outset, rigid-body displacements ω, u_0, v_0, which strictly appear when we satisfy the third equation of (37.1).

If condition (37.3) is fulfilled, the stress distribution is uniaxial ($\sigma_x \neq 0$, $\sigma_y = \tau_{xy} = 0$). If E_1, ν_1 are given (the other elastic characteristics, E_2, G, etc., may be arbitrary), the stress σ_x is determined from Eq. (37.3); the latter can be integrated in the general form only when the elastic characteristics are suitably specified (for example, when E_1 and ν_1 are functions of y only).

We now investigate the case when both Young's modulus and Poisson's ratio are the products of functions of only x and functions of only y, i.e.,

$$E_1 = E_x(x)\, E_y(y), \quad \nu_1 = \nu_{1x}(x)\, \nu_{1y}(y). \tag{37.4}$$

Substituting in (37.3), and separating the variables, we obtain two equations:

$$\left(\frac{\nu_{1x}}{E_x}\right)'' - \frac{n^2}{l^2}\frac{1}{E_x} = 0, \tag{37.5}$$

$$\left(\frac{\sigma_x}{E_y}\right)'' - \frac{n^2 \nu_{1y}}{l^2}\frac{\sigma_x}{E_y} = 0. \tag{37.6}$$

Here n is any constant real or pure imaginary number, or zero. We denote linearly independent solutions of Eq. (37.5) by $X_1(x, n)$, $X_2(x, n)$, and for Eq. (37.6) by $Y_1(y, n)$, $Y_2(y, n)$, and write the final results (see [89]).

(1) The expression for the modulus has the structure:

$$E_1 = \frac{E_y(y)}{C_1 X_1 + C_2 X_2}, \tag{37.7}$$

where E_y is an arbitrary function of y, and C_1, C_2 are arbitrary constants. Of course, these three arbitrary quantities (the variable E_y and two constants, C_1, C_2) have a definite physical meaning only when $E_1 > 0$. Moreover, certain restrictions must be imposed on the function E_y since it enters into Eq. (37.6).

(2) The product of the functions ν_{1x} and ν_{1y} must be positive and less than unity, but in other respects these functions may be arbitrary [apart from restrictions associated with the fact that they enter into Eqs. (37.5) and (37.6)].

(3) The stress is determined by the formula

$$\sigma_y = E_y (AY_1 + BY_2). \tag{37.8}$$

The constants A and B are found from the conditions at the loaded end and at any cross section:

$$\int_{-b/2}^{b/2} \sigma_x \, dy = P, \qquad \int_{-b/2}^{b/2} \sigma_x y \, dy = M. \tag{37.9}$$

From this we obtain a system of two equations for A and B:

$$\left.\begin{aligned} A \int_{-b/2}^{b/2} E_y Y_1 \, dy + B \int_{-b/2}^{b/2} E_y Y_2 \, dy = P, \\ A \int_{-b/2}^{b/2} E_y Y_1 y \, dy + B \int_{-b/2}^{b/2} E_y Y_2 y \, dy = M. \end{aligned}\right\} \tag{37.10}$$

(4) The displacements are found by formulas (37.2), which, after substitution for σ_x, E_1, and ν_1, take the form

$$\left.\begin{aligned} u &= (AY_1 + BY_2) \int (C_1 X_1 + C_2 X_2) \, dx - \omega y + u_0, \\ v &= -(C_1 X_1 + C_2 X_2) \nu_{1x} \int (AY_1 + BY_2) \nu_{1y} \, dy + \\ &\qquad + \omega x + v_0; \end{aligned}\right\} \tag{37.11}$$

the constants ω, u_0, v_0 are determined from the fixing conditions for an element of the bar axis at the end $x = 0$.

The case $n = 0$ is also a possible situation; the modulus and stress corresponding to it are

$$E_1 = \frac{\nu_{1x} E_y(y)}{C_1 + C_2 \frac{x}{l}}, \tag{37.12}$$

$$\sigma_x = E_y \left(A + B \frac{y}{l}\right). \tag{37.13}$$

Finally we note that when Poisson's ratio ν_1 is constant, and n is real and different from zero, formulas (37.7) and (37.8) become

$$E = \frac{E_y}{C_1 \cosh \frac{nx}{l} + C_2 \sinh \frac{nx}{l}}, \tag{37.14}$$

$$\sigma_y = E_y \left(A \cosh \frac{n\sqrt{\nu_1}}{l} y + B \sinh \frac{n\sqrt{\nu_1}}{l} y\right). \tag{37.15}$$

If n is an imaginary number, the hyperbolic cosine and sine must be replaced by the cosine and sine.

We have presented here the solution of only one simple problem of the elastic equilibrium of a non-homogeneous plane beam (strip). A large number of problems for beams loaded by various forces has been solved by G.B. Kolchin who has obtained stress distributions by applying different methods, and has drawn some conclusions of interest and importance for practice. The solutions of G.B. Kolchin are presented in his book [16] and other works (see also Bibliographical Index [18]).

Chapter 5

GENERALIZED PLANE STRAIN, PLANE PROBLEM, AND RELATED PROBLEMS FOR A HOMOGENEOUS AND A CONTINUOUSLY NON-HOMOGENEOUS BODY HAVING CYLINDRICAL ANISOTROPY

This chapter deals with the problems studied in the preceding chapter, but for a body having cylindrical anisotropy, namely the problems of generalized plane strain, plane strain, generalized plane stress, and also related problems specific to curvilinear anisotropy and to a continuously non-homogeneous body. These are the problems of tension-compression by an axial force and of bending by a moment; both these problems must be regarded as generalized since stress distributions in tension-compression and in bending are much more complicated than that in a homogeneous rectilinearly anisotropic body. Some of the most important special problems have been worked out to explicit formulas for stresses.

38. Generalized Plane Strain in a Homogeneous Body Having Cylindrical Anisotropy

In Chap. 3 of this book we have considered the general case of the elastic equilibrium of a loaded homogeneous cylinder having cylindrical anisotropy, a case characterized by the fact that all stress components are constant along the generators, and so depend only on two co-ordinates (Sec. 23). In this and the following sections we shall study special cases of the elastic equilibrium of the type considered, which are of practical interest. We begin with the case that has been termed in Chap. 4 generalized plane strain.

The problem is formulated as follows. There is a body of infinite length bounded by the surface of an arbitrary cylinder (in particular, this surface may have infinitely long plane portions and may not even be curved but plane, e.g. an infinite layer, an infinite half-space). The body is

homogeneous and has cylindrical anisotropy of the most general kind with an axis of anisotropy g parallel to the generators. There are surface forces distributed over the cylindrical surface and body forces, both acting in planes normal to the generators and constant along the generators, and the body forces, in addition, have a potential.*

The region of the cross section may be arbitrary, whether finite or infinite, simply connected or multiply connected. Let the plane of a cross section be taken as the co-ordinate plane $r\theta$ or xy, and let the origin of co-ordinates be chosen at a point O where the axis g intersects this section; the z axis is directed along the axis of anisotropy, and the x and y axes are directed arbitrarily if the region is infinite or parallel to the principal axes of inertia of the section if the region is finite. The x axis is simultaneously considered as the polar axis of a cylindrical co-ordinate system and the polar angles θ are measured from it (the distance r is measured, as always, from the origin O). In solving some questions for the case when the region of the section is finite, we shall also use a (Cartesian) co-ordinate system O', x', y', z' whose origin O' coincides with the centroid of the section and x', y' axes are directed along its principal axes of inertia. The co-ordinates of the centroid O' in the system O, x, y, z are denoted by ξ and η (Fig. 67).

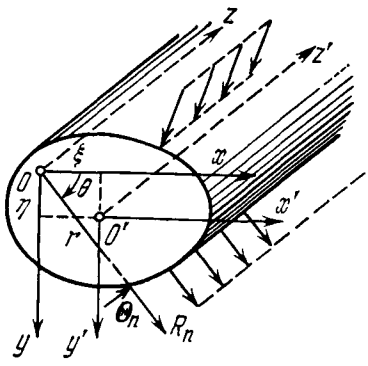

Fig. 67

The projections of the surface forces on the co-ordinate directions r, θ are denoted by R_n, Θ_n, the projections of the

* The last restriction is not essential, and the general equations can easily be derived without it; if there is a potential, these equations are somewhat simplified and become more symmetrical.

body forces (per unit volume) by R, Θ, with

$$R = -\frac{\partial \overline{U}}{\partial r}, \quad \Theta = -\frac{1}{r}\frac{\partial \overline{U}}{\partial \theta}, \tag{38.1}$$

where $\overline{U}(r, \theta)$ is the body force potential ($Z_n = Z = 0$).

We write out (with obvious abridgements) the generalized Hooke's law equations for the general case of cylindrical anisotropy using the strain coefficients a_{ij}:

$$\left.\begin{aligned} \varepsilon_r &= a_{11}\sigma_r + a_{12}\sigma_\theta + \ldots + a_{16}\tau_{r\theta}. \\ \varepsilon_\theta &= a_{12}\sigma_r + a_{22}\sigma_\theta + \ldots + a_{26}\tau_{r\theta}, \\ &\ldots\ldots\ldots\ldots\ldots\ldots \\ \gamma_{r\theta} &= a_{16}\sigma_r + a_{26}\sigma_\theta + \ldots + a_{66}\tau_{r\theta}, \end{aligned}\right\} \tag{38.2}$$

These equations involve 21 coefficients at most, but according to V.V. Novozhilov whose argument may be extended to the case of cylindrical anisotropy the number of independent (invariant) coefficients in the general case is 18 [34]. We now recall an important point, which has already been mentioned in Sec. 10. If the axis g passes outside the body or inside a cylindrical cavity, no additional restrictions need be imposed on a_{ij}; the coefficients may be arbitrary. If, however, the axis g passes, not inside a cavity, but through the body, then a_{ij} must necessarily be related by additional equations examined in detail in Chap. 1 (Sec. 10); otherwise the problem will have no physical meaning since it is solved on the basis of inconsistent equations.

Since the length of the body is infinite and the forces are independent of z, all cross sections are in identical conditions, and hence both the stresses and displacements are independent of z.

Referring to the expressions for displacements in the general case (23.12), we see that this condition is fulfilled if we set

$$A = B = C = \vartheta = 0, \quad \omega_1 = \omega_2 = 0, \tag{38.3}$$

and then

$$\left.\begin{aligned} u_r &= U(r, \theta) + u_0 \cos\theta + v_0 \sin\theta, \\ u_\theta &= V(r, \theta) - u_0 \sin\theta + v_0 \cos\theta + \omega_3 r, \\ w &= W(r, \theta) + w_0 \end{aligned}\right\} \tag{38.4}$$

(u_0, v_0, ω_3 are the coefficients of rigid-body displacements in the plane of the section, w_0 is a rigid-body displacement in the longitudinal direction).

The functions U, V, W satisfy Eqs. (23.9) and (23.10):

$$\left.\begin{aligned} \frac{\partial U}{\partial r} &= \beta_{11}\sigma_r + \beta_{12}\sigma_\theta + \ldots + \beta_{16}\tau_{r\theta}, \\ \frac{1}{r}\frac{\partial V}{\partial \theta} + \frac{U}{r} &= \beta_{12}\sigma_r + \beta_{22}\sigma_\theta + \ldots + \beta_{26}\tau_{r\theta}, \\ \frac{1}{r}\frac{\partial U}{\partial \theta} + \frac{\partial V}{\partial r} - \frac{V}{r} &= \beta_{16}\sigma_r + \beta_{26}\sigma_\theta + \ldots + \beta_{66}\tau_{r\theta}; \end{aligned}\right\} \quad (38.5)$$

$$\left.\begin{aligned} \frac{\partial W}{\partial r} &= \beta_{15}\sigma_r + \beta_{25}\sigma_\theta + \beta_{45}\tau_{\theta z} + \beta_{55}\tau_{rz} + \beta_{56}\tau_{r\theta}, \\ \frac{1}{r}\frac{\partial W}{\partial \theta} &= \beta_{14}\sigma_r + \beta_{24}\sigma_\theta + \quad \ldots \quad + \beta_{46}\tau_{r\theta}. \end{aligned}\right\} \quad (38.6)$$

As is known (Sec. 23), β_{ij} in (38.5) and (38.6) are the reduced elastic constants:

$$\beta_{ij} = a_{ij} - \frac{a_{i3}a_{j3}}{a_{33}} \quad (i,\ j = 1,\ 2,\ 4,\ 5,\ 6). \quad (38.7)$$

Further, as in the general case, we introduce two stress functions, F and ψ, and obtain the same expressions for five components as in the general case (Sec. 23):

$$\left.\begin{aligned} \sigma_r &= \frac{1}{r}\frac{\partial F}{\partial r} + \frac{1}{r^2}\frac{\partial^2 F}{\partial \theta^2} + \overline{U}, \\ \sigma_\theta &= \frac{\partial^2 F}{\partial r^2} + \overline{U}, \\ \tau_{r\theta} &= \frac{\partial^2}{\partial r\,\partial \theta}\left(\frac{F}{r}\right), \quad \tau_{rz} = \frac{1}{r}\frac{\partial \psi}{\partial \theta}, \quad \tau_{\theta z} = -\frac{\partial \psi}{\partial r}. \end{aligned}\right\} \quad (38.8)$$

The normal stress at the cross sections is expressed in terms of all other stresses:

$$\sigma_z = -\frac{1}{a_{33}}\left(a_{13}\sigma_r + a_{23}\sigma_\theta + a_{34}\tau_{\theta z} + a_{35}\tau_{rz} + a_{36}\tau_{r\theta}\right), \quad (38.9)$$

The functions F and ψ satisfy a system of two equations:

$$\left.\begin{aligned}
&L_4'F+L_3'\psi=-(\beta_{12}+\beta_{22})\frac{\partial^2\overline{U}}{\partial r^2}+\\
&\quad+(\beta_{16}+\beta_{26})\frac{1}{r}\frac{\partial^2\overline{U}}{\partial r\,\partial\theta}-(\beta_{11}+\beta_{12})\frac{1}{r^2}\frac{\partial^2\overline{U}}{\partial\theta^2}+\\
&\quad+(\beta_{11}-2\beta_{22}-\beta_{12})\frac{1}{r}\frac{\partial\overline{U}}{\partial r}+(\beta_{16}+\beta_{26})\frac{1}{r^2}\frac{\partial\overline{U}}{\partial\theta},\\
&L_3''F+L_2'\psi=(\beta_{14}+\beta_{24})\left(\frac{\partial\overline{U}}{\partial r}-\frac{\overline{U}}{r}\right)-\\
&\qquad\qquad-(\beta_{15}+\beta_{25})\frac{1}{r}\frac{\partial\overline{U}}{\partial\theta}
\end{aligned}\right\}\qquad(38.10)$$

where L_4', L_3', L_3'', and L_2' are differential operators of the fourth, third, and second orders containing 13, 7, 8, and 4 terms. We shall not give expressions for them since they are available in Chap 3, Sec. 23 [see (23.16)]. The boundary conditions on the cylindrical surface are not different from conditions (23.17) of the general case:

$$\left.\begin{aligned}
\sigma_r\cos(n,\ r)+\tau_{r\theta}\cos(n,\ \theta)&=R_n,\\
\tau_{r\theta}\cos(n,\ r)+\sigma_\theta\cos(n,\ \theta)&=\Theta_n,\\
\tau_{rz}\cos(n,\ r)+\tau_{\theta z}\cos(n,\ \theta)&=0.
\end{aligned}\right\}\qquad(38.11)$$

The problem is reduced to that of determining two stress functions satisfying conditions (38.11), or, in other words, to the boundary value problem for system (38.10), generally non-homogeneous, with known right-hand sides [26]. The resulting stresses reduce at each cross section to a longitudinal force P, a bending moment with components M_1, M_2, and a twisting moment M_t. These four quantities, identical for all sections, are determined from equalities (23.18) to (23.21), where we must set $A = B = C = \vartheta = 0$ (see also Fig. 26).

If at each point there are no planes of elastic symmetry normal to the generators, the cross sections do not remain plane after deformation, but become warped (all in the same manner); the warping depends on the function W [the third formula in (38.4)]. The deformation is not plane

strain (in the common sense), and it may be termed generalized plane strain.

If the body has a finite length and the end sections are fixed so that the distance between them cannot change, it may be taken, on the basis of Saint-Venant's principle, that the stresses are the same as in a body of infinite length at all points remote from the ends. There are zones of local stresses near the ends, but we do not know how the stresses are distributed there since there are not enough data for that; Saint-Venant's principle cannot provide them since it is of a purely qualitative nature.

The situation is somewhat more complicated in the case when the body loaded over the cylindrical surface as indicated above has a finite length and the ends are free from load. An approximate solution for a finite region of the section is obtained by solving the boundary value problem for system (23.15), more complicated than (38.10) and containing four unknown constants, A, B, C, ϑ. While satisfying the conditions on the lateral surface (38.11) exactly, we can satisfy the conditions at the free ends only approximately by requiring the fulfilment of conditions (23.18) to (23.21), where $P = M_1 = M_2 = M_t = 0$. We thus obtain a system of equations for four unknown constants and, on solving it, we find a stress distribution in the body for which the resultant force vector and the resultant couple at the ends are zero. The formulas for displacements (23.12) in this case show that the forces distributed over the cylindrical surface produce the warping of the sections and the twisting, extension, and bending of the axis.

39. Problem of Plane Strain for a Body with Cylindrical Anisotropy, and Related Problems

The problem considered in the preceding section is greatly simplified if the plane of the cross section of a body is a plane of elastic symmetry [26]. By retaining the arrangement of the co-ordinate axes as in Fig. 67, in this case we have

$$\left.\begin{aligned} a_{14} = a_{24} = a_{34} = a_{46} = a_{15} = a_{25} = a_{35} = a_{56} = 0, \\ \beta_{14} = \beta_{24} = \beta_{46} = \beta_{15} = \beta_{25} = \beta_{56} = 0. \end{aligned}\right\} \quad (39.1)$$

System (38.10) falls into two equations, one containing only the function F, and the other only the function ψ, and the problem falls into two problems: (1) the determination of the function F and the corresponding stresses, and (2) the determination of the function ψ (not associated with the finding of F) and the corresponding stresses characteristic of pure torsion deformation. Leaving out, for the present, the second problem (the torsion problem, which will be taken up separately in the next chapter), we consider several variants of the first problem.

(1) *Plane strain* [26]. Suppose that a homogeneous body with cylindrical anisotropy of the kind of (39.1) is infinitely long and is loaded by surface and body forces. Both the surface and body forces act in planes normal to the generators and do not vary along the generators. Referring to Sec. 23, we see that the constants A, B, C, ϑ are zero since all cross sections deform identically, and the displacements U, V, W satisfy the equations

$$\left.\begin{aligned} \frac{\partial U}{\partial r} &= \beta_{11}\sigma_r + \beta_{12}\sigma_\theta + \beta_{16}\tau_{r\theta}, \\ \frac{1}{r}\frac{\partial V}{\partial \theta} + \frac{U}{r} &= \beta_{12}\sigma_r + \beta_{22}\sigma_\theta + \beta_{26}\tau_{r\theta}, \\ \frac{1}{r}\frac{\partial U}{\partial \theta} + \frac{\partial V}{\partial r} - \frac{V}{r} &= \beta_{16}\sigma_r + \beta_{26}\sigma_\theta + \beta_{66}\tau_{r\theta}; \end{aligned}\right\} \tag{39.2}$$

$$\frac{\partial W}{\partial r} = 0, \qquad \frac{1}{r}\frac{\partial W}{\partial \theta} + 0. \tag{39.3}$$

We conclude that the general expressions for displacements are of the form

$$\left.\begin{aligned} u_r &= U(r, \theta) + u_0 \cos\theta + v_0 \sin\theta, \\ u_\theta &= V(r, \theta) - u_0 \sin\theta + v_0 \cos\theta + \omega_3 r, \\ w &= w_0, \end{aligned}\right\} \tag{39.4}$$

hence, the cross sections do not warp, and the deformation is plane strain. Since the function ψ satisfies a homogeneous equation and homogeneous boundary conditions, it follows that $\psi = 0$ at every point and $\tau_{rz} = \tau_{\theta z} = 0$.

The formulas for the remaining stresses are obtained as

$$\left.\begin{aligned} \sigma_r &= \frac{1}{r}\frac{\partial F}{\partial r} + \frac{1}{r^2}\frac{\partial^2 F}{\partial \theta^2} + \overline{U}, \\ \sigma_\theta &= \frac{\partial^2 F}{\partial r^2} + \overline{U}, \quad \tau_{r\theta} = -\frac{\partial^2}{\partial r\,\partial\theta}\left(\frac{F}{r}\right); \end{aligned}\right\} \tag{39.5}$$

$$\sigma_z = -\frac{1}{a_{33}}\left(a_{13}\sigma_r + a_{23}\sigma_\theta + a_{36}\tau_{r\theta}\right). \tag{39.6}$$

The function F satisfies the equation

$$\begin{aligned} L_4' F = &-(\beta_{12}+\beta_{22})\frac{\partial^2 \overline{U}}{\partial r^2} + (\beta_{16}+\beta_{26})\frac{1}{r}\frac{\partial^2 \overline{U}}{\partial r\,\partial\theta} - \\ &-(\beta_{11}+\beta_{12})\frac{1}{r^2}\frac{\partial^2 \overline{U}}{\partial \theta^2} + (\beta_{11}-2\beta_{22}-\beta_{12})\frac{1}{r}\frac{\partial \overline{U}}{\partial r} + \\ &+(\beta_{16}+\beta_{26})\frac{1}{r^2}\frac{\partial \overline{U}}{\partial \theta}. \end{aligned} \tag{39.7}$$

Here L_4' is the fourth-order operator previously encountered in Chap. 3 [see (23.16)]. The boundary conditions are of the form

$$\left.\begin{aligned} \sigma_r \cos(n, r) + \tau_{r\theta}\cos(n, \theta) &= R_n, \\ \tau_{r\theta}\cos(n, r) + \sigma_\theta \cos(n, \theta) &= \Theta_n. \end{aligned}\right\} \tag{39.8}$$

The deformation is also plane for a body of finite length with fixed ends (the distance between the ends cannot change). In this case it is necessary to exclude from consideration zones of local stresses near the ends, where the distribution of stress and strain cannot be found by the method used here, but, on the basis of Saint-Venant's principle, outside these zones the deformation is plane strain and the stress distribution is such as in plane strain.

If the body has a finite length and a finite region of the cross section and if it is loaded as indicated above, and its ends are not loaded or fixed, an approximate solution of

the problem can be obtained by using the equation

$$\left.\begin{aligned} L_4'F = {} & \frac{2}{a_{33}}\left[-a_{36}A + (a_{13}-a_{23})B\right]\frac{\sin\theta}{r} + \\ & + \frac{2}{a_{33}}\left[(a_{13}-a_{23})A + a_{36}B\right]\frac{\cos\theta}{r} - \\ & - (\beta_{12}+\beta_{22})\frac{\partial^2\overline{U}}{\partial r^2} + (\beta_{16}+\beta_{26})\frac{1}{r}\frac{\partial^2\overline{U}}{\partial r\,\partial\theta} - \\ & - (\beta_{11}+\beta_{12})\frac{1}{r^2}\frac{\partial^2\overline{U}}{\partial\theta^2} + (\beta_{11}-2\beta_{22}-\beta_{12})\frac{1}{r}\frac{\partial\overline{U}}{\partial r} + \\ & + (\beta_{16}+\beta_{26})\frac{1}{r^2}\frac{\partial\overline{U}}{\partial\theta}. \end{aligned}\right\} \tag{39.9}$$

It is necessary to solve the boundary value problem for this equation by satisfying conditions (39.8). The unknown constants A, B, C entering into Eq. (39.9) and into the expression for the stress σ_z

$$\sigma_z = \frac{1}{a_{33}}(Ar\cos\theta + Br\sin\theta + C) - \\ - \frac{1}{a_{33}}(a_{13}\sigma_r + a_{23}\sigma_\theta + a_{36}\tau_{r\theta}), \tag{39.10}$$

are determined from the end conditions by requiring that the resultant force vector and the resultant couple at the ends should be equal to zero:

$$\left.\begin{aligned} & \iint \sigma_z\,dS = 0, \quad \iint \sigma_z(r\sin\theta - \eta)\,dS = 0, \\ & \iint \sigma_z(r\cos\theta - \xi)\,dS = 0 \qquad (dS = r\,dr\,d\theta). \end{aligned}\right\} \tag{39.11}$$

From conditions (39.11) we obtain a system of three equations for three unknowns, A, B, C.

The following general formulas are obtained for displacements:

$$\left.\begin{aligned} u_r = {} & -\frac{z^2}{2}(A\cos\theta + B\sin\theta) + U + \\ & + z(\omega_2\cos\theta - \omega_1\sin\theta) + u_0\cos\theta + v_0\sin\theta, \\ u_\theta = {} & -\frac{z^2}{2}(-A\sin\theta + B\cos\theta) + V + \omega_3 r - \\ & - z(\omega_2\sin\theta + \omega_1\cos\theta) - u_0\sin\theta + v_0\cos\theta, \\ w = {} & z(Ar\cos\theta + Br\sin\theta + C) + \\ & + r(-\omega_2\cos\theta + \omega_1\sin\theta) + w_0, \end{aligned}\right\} \tag{39.12}$$

where ω_k, u_0, v_0, w_0 are six constants characterizing rigid-body displacements. The functions U, V are determined from a system of three equations:

$$\left.\begin{aligned}
&\frac{\partial U}{\partial r}=\beta_{11}\sigma_r+\beta_{12}\sigma_\theta+\beta_{16}\tau_{r\theta}+\\
&\qquad\qquad+a_{13}(Ar\cos\theta+Br\sin\theta+C),\\
&\frac{1}{r}\frac{\partial V}{\partial\theta}+\frac{U}{r}=\beta_{12}\sigma_r+\beta_{22}\sigma_\theta+\beta_{26}\tau_{r\theta}+\\
&\qquad\qquad+a_{23}(Ar\cos\theta+Br\sin\theta+C),\\
&\frac{1}{r}\frac{\partial U}{\partial\theta}+\frac{\partial V}{\partial r}-\frac{V}{r}=\beta_{16}\sigma_r+\beta_{26}\sigma_\theta+\\
&\qquad\qquad+\beta_{66}\tau_{r\theta}+a_{36}(Ar\cos\theta+Br\sin\theta+C).
\end{aligned}\right\}\tag{39.13}$$

After finding the unknown constants and the functions U, V, we may conclude from the expressions for displacements (39.12) that a body with free ends deforms so that its axis bends and undergoes longitudinal tension or compression, but does not twist, while the cross sections remain plane.

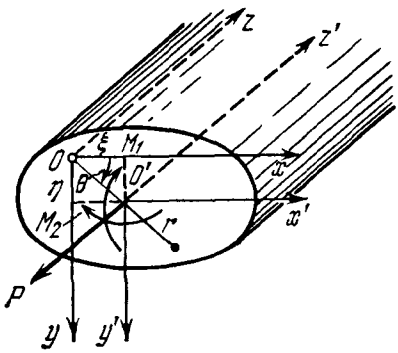

Fig. 68

(2) *Equilibrium of a bar under an axial force and bending moments* [26]. If the lateral surface of a cylinder, whose region of the cross section is finite, is free from external forces, and the ends are acted on by a force P directed along the geometrical axis z and a bending moment with components M_1, M_2 with respect to the principal axes of inertia x, y of the section, an elementary stress distribution is obtained in a homogeneous cylinder with rectilinear anisotropy, as in a homogeneous isotropic cylinder. The situation is different if a cylinder has curvilinear, and in particular cylindrical, anisotropy with an axis of anisotropy parallel to the generators (Fig. 68). The stress components τ_{rz} and $\tau_{\theta z}$ are zero, and σ_r, σ_θ, $\tau_{r\theta}$ are expressed in terms

of the stress function F [formulas (39.5)]. The stress function satisfies Eq. (39.9), and the sixth stress component is determined by formula (39.10).

The boundary conditions in this case are homogeneous:

$$\left.\begin{aligned} \sigma_r \cos(n,\ r) + \tau_{r\theta} \cos(n,\ \theta) = 0, \\ \tau_{r\theta} \cos(n,\ r) + \sigma_\theta \cos(n,\ \theta) = 0, \end{aligned}\right\} \tag{39.14}$$

and the equation for the stress function F (39.9) is non-homogeneous. When there are no body forces, the conditions on the cylindrical surface (39.14) are greatly simplified and reduce (in the case of a simply connected region of the section) to

$$\frac{\partial F}{\partial r} = 0, \quad \frac{\partial F}{\partial \theta} = 0. \tag{39.15}$$

Thus, the problem of tension-compression by an axial force and bending by moments for a bar having cylindrical anisotropy is akin to the plane strain problem and of much the same difficulty. The tensile force and the bending moments produce not only the normal stress σ_z at cross sections, but also the stresses σ_r, σ_θ, $\tau_{r\theta}$ characteristic of plane strain.

The problem is extremely simplified if the elastic constants are related by the equalities

$$a_{23} = a_{13}, \quad a_{36} = 0 \tag{39.16}$$

(and this is true, for example, for an orthotropic body whose axis of anisotropy passes, not in a cavity, but through the body) and if there are no body forces. The equation for the stress function becomes homogeneous, $L_4' F = 0$. Considering the boundary conditions, it may be taken that $F = 0$; the corresponding stress distribution is

$$\left.\begin{aligned} \sigma_z = \frac{P}{S} + \frac{M_1}{I_1}(r \sin\theta - \eta) + \frac{M_2}{I_2}(r \cos\theta - \xi), \\ \sigma_r = \sigma_\theta = \tau_{r\theta} = \tau_{rz} = \tau_{\theta z} = 0, \end{aligned}\right\} \tag{39.17}$$

where S is the cross-sectional area and I_1, I_2 are its moments of inertia with respect to the principal axes of inertia x', y'.

(3) *Generalized plane stress.* Closely related to the plane strain problem is also the problem of generalized plane stress in a plane-parallel plate of uniform thickness h [26]. Let there be such a plate of arbitrary shape having cylindrical anisotropy with an axis of anisotropy normal to the middle plane, this plane and those parallel to it being planes of elastic symmetry. By taking the axis of anisotropy as the z axis of a cylindrical co-ordinate system r, θ, z with origin O at a point of the middle plane (Fig. 69), we consider the elastic equilibrium under the action of forces distributed along the edge symmetrically with respect to the middle plane and varying only slightly across the thickness.

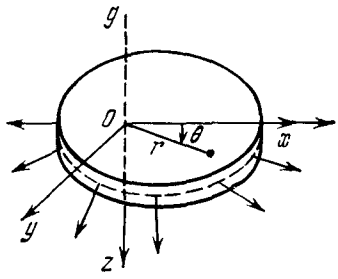

Fig. 69

A fairly clear idea about the state of stress and strain in the plate can be obtained from the average values of the stress components $\bar{\sigma}_r$, $\bar{\sigma}_\theta$, $\bar{\tau}_{r\theta}$ and the projections of displacement across the thickness:

$$\left.\begin{aligned}
&\bar{\sigma}_r=\frac{1}{h}\int_{-h/2}^{h/2}\sigma_r\,dz, \quad \bar{\sigma}_\theta=\frac{1}{h}\int_{-h/2}^{h/2}\sigma_\theta\,dz,\\
&\bar{\tau}_{r\theta}=\frac{1}{h}\int_{-h/2}^{h/2}\tau_{r\theta}\,dz,\\
&\bar{u}_r=\frac{1}{h}\int_{-h/2}^{h/2}u_r\,dz, \quad \bar{u}_\theta=\frac{1}{h}\int_{-h/2}^{h/2}u_\theta\,dz.
\end{aligned}\right\} \tag{39.18}$$

We introduce into consideration body forces averaged across the thickness and their potential $\bar{U}$; we have

$$\bar{R}=-\frac{\partial\bar{U}}{\partial r}, \quad \bar{\Theta}=-\frac{1}{r}\frac{\partial\bar{U}}{\partial\theta}. \tag{39.19}$$

As in the case of a body with rectilinear anisotropy, the average stresses may be expressed in terms of the stress function [formulas (39.5)]. Neglecting the average stress $\bar{\sigma}_z$ in comparison with $\bar{\sigma}_r$, $\bar{\sigma}_\theta$, $\bar{\tau}_{r\theta}$, the resulting equation for the function F is

$$\bar{L}_4' F = -(a_{12}+a_{22})\frac{\partial^2 \bar{U}}{\partial r^2} + (a_{16}+a_{26})\frac{1}{r}\frac{\partial^2 \bar{U}}{\partial r\,\partial\theta} - \\ -(a_{11}+a_{12})\frac{1}{r^2}\frac{\partial^2 \bar{U}}{\partial\theta^2} + (a_{11}-2a_{22}-a_{12})\frac{1}{r}\frac{\partial \bar{U}}{\partial r} + \\ +(a_{16}+a_{26})\frac{1}{r^2}\frac{\partial \bar{U}}{\partial\theta}, \qquad (39.20)$$

where $\bar{L}_4'$ is an operator obtained from L_4' [the first formula of (23.16)] by replacing the reduced coefficients β_{ij} by the corresponding strain coefficients a_{ij}. On the basis of the generalized Hooke's law equations the average displacements are determined from the equations

$$\left.\begin{aligned} \frac{\partial \bar{u}_r}{\partial r} &= a_{11}\bar{\sigma}_r + a_{12}\bar{\sigma}_\theta + a_{16}\bar{\tau}_{r\theta} \\ \frac{1}{r}\frac{\partial \bar{u}_\theta}{\partial\theta} + \frac{\bar{u}_r}{r} &= a_{12}\bar{\sigma}_r + a_{22}\bar{\sigma}_\theta + a_{26}\bar{\tau}_{r\theta}, \\ \frac{1}{r}\frac{\partial \bar{u}_r}{\partial\theta} + \frac{\partial \bar{u}_\theta}{\partial r} - \frac{\bar{u}_\theta}{r} &= a_{16}\bar{\sigma}_r + a_{26}\bar{\sigma}_\theta + a_{66}\bar{\tau}_{r\theta}. \end{aligned}\right\} \qquad (39.21)$$

The boundary conditions, i.e., the conditions on the contour of the region of the plate (in the middle plane) are identical in form with the conditions on the contour of the cross section in the case of plane strain.

40. Plane Problem for a Continuously Non-homogeneous Body Having Cylindrical Anisotropy

All general equations derived for a homogeneous body with cylindrical anisotropy can be extended to the case of a continuously non-homogeneous body with anisotropy of the same kind [26]. The procedure of derivation is similar to that for a homogeneous body. Hence, we may omit some intermediate computations and, moreover, restrict

our attention to a body with anisotropy of a special kind, viz. an orthotropic body.

We shall consider only the case of plane strain since the allied two cases, as shown in Sec. 39, are investigated in an entirely similar way.

Let there be a body of infinite length bounded by an arbitrary cylindrical surface and having cylindrical anisotropy, or, more specifically, let the body be orthotropic (the axis of anisotropy is parallel to the generators, one of the three planes of elastic symmetry is normal at each point to the axis of anisotropy g, i.e., it coincides with the plane of the cross section). Let the axis g be taken as the z axis, and the plane of any cross section as the plane xy or $r\theta$ (Fig. 67).

Suppose that there are surface and body forces acting normally to the generators and constant along the length; the body forces have a potential, so that

$$R = -\frac{\partial \bar{U}}{\partial r}, \quad \Theta = -\frac{1}{r}\frac{\partial \bar{U}}{\partial \theta}. \tag{40.1}$$

In the case of an orthotropic body it is more convenient to use the engineering elastic characteristics, which are denoted as in Sec. 10: E_r, E_θ, E_z = Young's moduli, $\nu_{r\theta}$, $\nu_{\theta r}$, . . ., ν_{zr} = Poisson's ratios, $G_{r\theta}$, $G_{\theta z}$, G_{rz} = shear moduli. The reduced elastic characteristics are expressed as [see (24.5)]

$$\left.\begin{aligned} \beta_{11} &= \frac{1-\nu_{rz}\nu_{zr}}{E_r}, \quad \beta_{12} = -\frac{\nu_{r\theta}+\nu_{rz}\nu_{z\theta}}{E_r}, \\ \beta_{22} &= \frac{1-\nu_{\theta z}\nu_{z\theta}}{E_\theta}, \quad \beta_{66} = \frac{1}{G_{r\theta}} \end{aligned}\right\} \tag{40.2}$$

(the other β_{ij} are either zero or do not enter into plane strain formulas).

We give only the final results obtained in the same way as for a homogeneous body.

The displacements u_r, u_θ, w are determined by the same formulas (39.4) as for a homogeneous body, and the functions

U, V are found from the equations

$$\left.\begin{aligned} \frac{\partial U}{\partial r} &= \beta_{11}\sigma_r + \beta_{12}\sigma_\theta, \\ \frac{1}{r}\frac{\partial V}{\partial \theta} + \frac{U}{r} &= \beta_{12}\sigma_r + \beta_{22}\sigma_\theta, \\ \frac{1}{r}\frac{\partial U}{\partial \theta} + \frac{\partial V}{\partial r} - \frac{V}{r} &= \beta_{66}\tau_{r\theta}, \end{aligned}\right\} \tag{40.3}$$

where β_{ij} are not constants as in Eqs. (39.2), but functions of r and θ (since the engineering characteristics E, ν, G are functions of r and θ).

Of the six stresses two are zero, viz. $\tau_{rz} = \tau_{\theta z} = 0$; three stresses are expressed in terms of the stress function:

$$\left.\begin{aligned} \sigma_r &= \frac{1}{r}\frac{\partial F}{\partial r} + \frac{1}{r^2}\frac{\partial^2 F}{\partial \theta^2} + \overline{U}, \\ \sigma_\theta &= \frac{\partial^2 F}{\partial r^2} + \overline{U}, \quad \tau_{r\theta} = -\frac{\partial^2}{\partial r\,\partial \theta}\left(\frac{F}{r}\right), \end{aligned}\right\} \tag{40.4}$$

and the sixth, last one depends on σ_r and σ_θ:

$$\sigma_z = \nu_{zr}\sigma_r + \nu_{z\theta}\sigma_\theta. \tag{40.5}$$

The stress function satisfies a non-homogeneous equation with variable coefficients if body forces are acting, which is written as

$$\begin{aligned} &\left(\frac{\partial^2}{\partial \theta^2} - r\frac{\partial}{\partial r}\right)\left(\frac{\beta_{11}}{r}\frac{\partial F}{\partial r} + \frac{\beta_{11}}{r^2}\frac{\partial^2 F}{\partial \theta^2} + \beta_{12}\frac{\partial^2 F}{\partial r^2}\right) + \\ &\quad + r\frac{\partial^2}{\partial r^2}\left(\beta_{12}\frac{\partial F}{\partial r} + \frac{\beta_{12}}{r}\frac{\partial^2 F}{\partial \theta^2} + \beta_{22} r\frac{\partial^2 F}{\partial r^2}\right) + \\ &+ \frac{\partial^2}{\partial r\,\partial \theta}\left[r\beta_{66}\frac{\partial^2}{\partial r\,\partial \theta}\left(\frac{F}{r}\right)\right] = -\left(\frac{\partial^2}{\partial \theta^2} - r\frac{\partial}{\partial r}\right)[(\beta_{11} + \beta_{12})\overline{U}] - \\ &\quad - r\frac{\partial^2}{\partial r^2}[r(\beta_{12} + \beta_{22})\overline{U}]. \end{aligned} \tag{40.6}$$

When forces are prescribed, the boundary conditions are of the form of (39.8).

If the cylinder has a finite length and a finite region of the cross section, the theory may be considered true, by virtue of Saint-Venant's principle, for all its parts with the exception of zones of local stresses near the ends where the

stresses cannot be found by this method. Finally we note that the proposed theory may also be used to obtain an approximate solution for a body of finite length with free ends. In this case the stress σ_z contains three unknown constants:

$$\sigma_z = E_z (Ar \cos \theta + Br \sin \theta + C) + \nu_{zr}\sigma_r + \nu_{z\theta}\sigma_\theta \quad (40.7)$$

and the stress function satisfies Eq. (24.5), where $\bar{U} = 0$:

$$\left(\frac{\partial^2}{\partial\theta^2} - r\frac{\partial}{\partial r}\right)\left(\frac{\beta_{11}}{r}\frac{\partial F}{\partial r} + \frac{\beta_{11}}{r^2}\frac{\partial^2 F}{\partial\theta^2} + \beta_{12}\frac{\partial^2 F}{\partial r^2}\right) +$$
$$+ r\frac{\partial^2}{\partial r^2}\left(\beta_{12}\frac{\partial F}{\partial r} + \frac{\beta_{12}}{r}\frac{\partial^2 F}{\partial\theta^2} + \beta_{22} r\frac{\partial^2 F}{\partial r^2}\right) +$$
$$+ \frac{\partial^2}{\partial r\,\partial\theta}\left[r\beta_{66}\frac{\partial^2}{\partial r\,\partial\theta}\left(\frac{F}{r}\right)\right] =$$
$$= \left(\frac{\partial^2}{\partial\theta^2} - r\frac{\partial}{\partial r}\right)[\nu_{zr}(Ar\cos\theta + Br\sin\theta + C)] +$$
$$+ r^2\frac{\partial^2}{\partial r^2}[\nu_{z\theta}(Ar\cos\theta + Br\sin\theta + C)]. \quad (40.8)$$

The constants A, B, C are determined from the end conditions by requiring that the resultant force vector and the resultant couple should be zero at the ends. For this the stresses σ_r, σ_θ, σ_z must first be found, and then A, B, C are determined.

In the case of generalized plane stress all reduced coefficients β_{ij} must be replaced by the coefficients a_{ij}. Of all the foregoing equations there remain only (40.3), (40.4), and (40.6).

41. Axially Symmetric Distribution of Stress in a Homogeneous Hollow Cylinder Having Cylindrical Anisotropy

We now turn to the study of specific problems and, to begin with, we consider a body in the form of a hollow circular cylinder with an axis of anisotropy coincident with the geometrical axis of the cylinder.

We first consider the elastic equilibrium of a body in the form of a hollow cylinder (tube) of finite length made of

a homogeneous material having cylindrical anisotropy of the most general kind and subjected to forces distributed over the lateral surface and the ends. Suppose that (1) the forces on the cylindrical surfaces are normal and are distributed uniformly, and (2) the forces at the ends are distributed identically over both surfaces and reduce to equal and opposite axial forces and twisting moments.

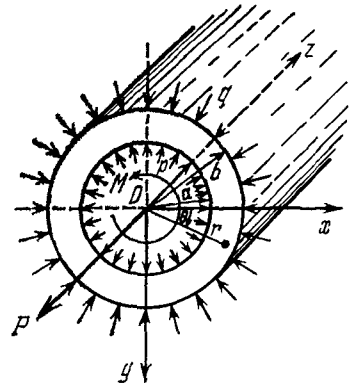

Fig. 70

Let the axis of the body be taken as the z axis of a cylindrical co-ordinate system, with the polar axis x directed arbitrarily in the plane of either of the end sections. We introduce the notation: a, b = inner and outer radii of the section; p, q = internal and external pressure per unit area; P = axial force, M = = twisting moment (Fig. 70). We further introduce symbols for coefficients depending on β_{ij}, which will enter into formulas for the stresses:

$$\left.\begin{aligned}
\mu_1 &= \frac{\beta_{14}-2\beta_{24}}{4(\beta_{22}\beta_{44}-\beta_{24}^2)-(\beta_{11}\beta_{44}-\beta_{14}^2)},\\
\mu_2 &= \frac{\beta_{11}-4\beta_{22}}{4(\beta_{22}\beta_{44}-\beta_{24}^2)-(\beta_{11}\beta_{44}-\beta_{14}^2)},\\
\varkappa_1 &= \frac{(a_{13}-a_{23})\,\beta_{44}-a_{34}(\beta_{14}-\beta_{24})}{\beta_{22}\beta_{44}-\beta_{24}^2-(\beta_{11}\beta_{44}-\beta_{14}^2)},\\
\varkappa_2 &= \frac{(a_{13}-a_{23})(\beta_{14}+\beta_{24})-a_{34}(\beta_{11}-\beta_{22})}{\beta_{22}\beta_{44}-\beta_{24}^2-(\beta_{11}\beta_{44}-\beta_{14}^2)};
\end{aligned}\right\} \tag{41.1}$$

$$\left.\begin{aligned}
k &= \sqrt{\frac{\beta_{11}\beta_{44}-\beta_{14}^2}{\beta_{22}\beta_{44}-\beta_{24}^2}}, & g_1 &= \frac{\beta_{14}+\beta_{24}}{\beta_{44}},\\
g_k &= \frac{\beta_{14}+k\beta_{24}}{\beta_{44}}, & g_{-k} &= \frac{\beta_{14}-k\beta_{24}}{\beta_{44}}.
\end{aligned}\right\} \tag{41.2}$$

It may be stated that even in the general case of anisotropy the axially symmetric distribution of external forces produces

stresses identical at all cross sections and dependent only on the distance r from the axis. We may set $A = B = \bar{U} = 0$ in system (23.15) and seek the solution of the resulting equations in the form of functions of only one variable r:

$$F = F(r), \quad \psi = \psi(r). \tag{41.3}$$

The expressions for the stresses are obtained as

$$\left.\begin{aligned} &\sigma_r = \frac{F'}{r}, \quad \sigma_\theta = F'', \quad \tau_{r\theta} = 0, \\ &\tau_{rz} = 0, \quad \tau_{\theta z} = -\psi'; \end{aligned}\right\} \tag{41.4}$$

$$\sigma_z = C - \frac{1}{a_{33}}(a_{13}\sigma_r + a_{23}\sigma_\theta + a_{34}\tau_{\theta z}). \tag{41.5}$$

The system of equations for F and ψ becomes

$$\left.\begin{aligned} &\beta_{22}\left(F^{\mathrm{IV}} + \frac{2F'''}{r}\right) + \beta_{11}\left(-\frac{F''}{r^2} + \frac{F'}{r^3}\right) - \\ &\qquad - \beta_{24}\psi''' + (\beta_{14} - 2\beta_{24})\frac{\psi''}{r} = 0, \\ &-\beta_{24}F''' - (\beta_{14} + \beta_{24})\frac{F''}{r} + \beta_{44}\left(\psi'' + \frac{\psi'}{r}\right) = \\ &\qquad = \frac{Ca_{34}}{r} - 2\vartheta. \end{aligned}\right\} \tag{41.6}$$

The conditions on the cylindrical surfaces are:

$$\left.\begin{aligned} &\text{when } r = a, \quad \sigma_r = -p; \\ &\text{when } r = b, \quad \sigma_r = -q. \end{aligned}\right\} \tag{41.7}$$

The conditions at the ends reduce to the following two:

$$\int_a^b \sigma_z r\,dr = \frac{p}{2\pi}, \qquad \int_a^b \tau_{\theta z} r^2\,dr = \frac{M}{2\pi}. \tag{41.8}$$

The general solution of system (41.6) is

$$\left.\begin{aligned} &F = C_0\frac{\beta_{14}}{\beta_{11}}r + \frac{C_1}{2}r^2 + \frac{C_2}{1+k}r^{1+k} + \frac{C_3}{1-k}r^{1-k} + \\ &\qquad + C_4 + \frac{\vartheta\mu_1}{3}r^3, \\ &\psi = C_0\ln r + C\frac{a_{34}}{\beta_{44}}r + C_1 g_1 r + \frac{C_2}{k}g_k r^k - \\ &\qquad - \frac{C_3}{k}g_{-k}r^{-k} + C_5 - \frac{\vartheta\mu_2}{2}r^2. \end{aligned}\right\} \tag{41.9}$$

Of the six arbitrary constants C_i two can be set equal to zero since the corresponding stresses are zero, namely $C_4 = C_5 = 0$. The stress components expressed by formulas (41.4) in terms of constants, not yet found, are of the form

$$\left.\begin{aligned}
\sigma_r &= C_0 \frac{\beta_{14}}{\beta_{44}} \frac{1}{r} + C_1 + C_2 r^{k-1} + C_3 r^{-k-1} + \vartheta\mu_1 r, \\
\sigma_\theta &= C_1 + C_2 k r^{k-1} - C_3 k r^{-k-1} + 2\vartheta\mu_1 r, \\
\tau_{\theta z} &= -C_0 \frac{1}{r} - C \frac{a_{34}}{\beta_{44}} - C_1 g_1 - C_2 g_k r^{k-1} - \\
&\qquad - C_3 g_{-k} r^{-k-1} + \vartheta\mu_2 r.
\end{aligned}\right\} \quad (41.10)$$

On determining displacements from stresses (41.10) [by integration of the generalized Hooke's law equations (23.7) and (23.8)], we conclude that, with arbitrary C_0, C_1, C_2, C_3, the expressions for the displacements will involve non-periodic functions of the angle θ, i.e., the displacements will, in general, be multiple valued. To make them single valued, we must set

$$C_0 = 0 \text{ and } C_1 = C\varkappa_1 \qquad (41.11)$$

We introduce the following notation for the ratio of the radii of the section and the ratio of the variable distance to the outer radius:

$$c = \frac{a}{b}, \quad \rho = \frac{r}{b} \qquad (c < 1, \quad c \leqslant \rho \leqslant 1). \qquad (41.12)$$

By satisfying the conditions on the cylindrical surfaces, we obtain expressions for C_2 and C_3 in terms of C and three formulas for three stresses [for the fourth formula see (41.5)]:

$$\left.\begin{aligned}
\sigma_r = {} & \frac{pc^{k+1} - q}{1 - c^{2k}} \rho^{k-1} + \frac{qc^{k-1} - p}{1 - c^{2k}} c^{k+1} \rho^{-k-1} + \\
& + C\varkappa_1 \left(1 - \frac{1 - c^{k+1}}{1 - c^{2k}} \rho^{k-1} - \frac{1 - c^{k-1}}{1 - c^{2k}} c^{k+1} \rho^{-k-1}\right) + \\
& + \vartheta\mu_1 b \left(\rho - \frac{1 - c^{k+2}}{1 - c^{2k}} \rho^{k-1} - \frac{1 - c^{k-2}}{1 - c^{2k}} c^{k+2} \rho^{-k-1}\right),
\end{aligned}\right|$$

$$\left.\begin{aligned}
\sigma_\theta = {} & \frac{pc^{k+1}-q}{1-c^{2k}}\,k\rho^{k-1} - \frac{qc^{k-1}-p}{1-c^{2k}}\,kc^{k+1}\rho^{-k-1} + \\
& + C\varkappa_1\left(1+\frac{1-c^{k+1}}{1-c^{2k}}\,k\rho^{k-1}+\frac{1-c^{k-1}}{1-c^{2k}}\,kc^{k+1}\rho^{-k-1}\right) + \\
& + \vartheta\mu_1 b\left(2\rho-\frac{1-c^{k+2}}{1-c^{2k}}\,k\rho^{k-1}+\frac{1-c^{k-2}}{1-c^{2k}}\,kc^{k+2}\rho^{-k-1}\right), \\
\tau_{r\theta} = {} & -\frac{pc^{k+1}-q}{1-c^{2k}}\,g_k\rho^{k-1} - \frac{qc^{k-1}-p}{1-c^{2k}}\,g_{-k}c^{k+1}\rho^{-k-1} + \\
& + C\left[-\varkappa_2+\varkappa_1\left(\frac{1-c^{k+1}}{1-c^{2k}}\,g_k\rho^{k-1}+\right.\right. \\
& \left.\left.+\frac{1-c^{k-1}}{1-c^{2k}}\,g_{-k}c^{k+1}\rho^{-k-1}\right)\right]+\vartheta b\left[\mu_2\rho+\right. \\
& \left.+\mu_1\left(\frac{1-c^{k+2}}{1-c^{2k}}\,g_k\rho^{k-1}+\frac{1-c^{k-2}}{1-c^{2k}}\,g_{-k}c^{k+2}\rho^{-k-1}\right)\right].
\end{aligned}\right\} \quad (41.13)$$

The constants C and ϑ, remaining undetermined, must be found from the two end conditions (41.8). To obtain them, it is necessary to perform quite elementary but lengthy computations, which will lead to rather complicated expressions for the coefficients C and ϑ. For this reason we shall not write out either the computations or the final results.

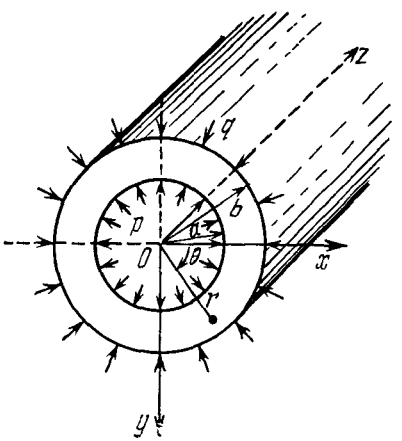

Fig. 71

42. Stress Distribution in a Hollow Homogeneous Cylinder under Internal and External Pressure

If the hollow cylinder considered in the preceding section is rigidly fixed at its ends and is deformed by pressures p and q distributed uniformly over the inner and outer surfaces, $r = a$ and $r = b$, it is in a state of generalized plane strain (Fig. 71).

The solution of the problem for a tube of material with cylindrical anisotropy of a special kind was obtained by Saint-Venant [113] and Voigt [128].* The formulas for the stresses in the general case of anisotropy are found from (41.13) assuming that $C = \vartheta = 0$. We obtain (the notation is taken from Sec. 41)

$$\left.\begin{aligned} \sigma_r &= \frac{pc^{k+1}-q}{1-c^{2k}}\rho^{k-1} + \frac{qc^{k-1}-p}{1-c^{2k}}c^{k+1}\rho^{-k-1}, \\ \sigma_\theta &= \frac{pc^{k+1}-q}{1-c^{2k}}k\rho^{k-1} - \frac{qc^{k-1}-p}{1-c^{2k}}kc^{k+1}\rho^{-k-1}, \\ \tau_{r\theta} &= 0; \end{aligned}\right\} \tag{42.1}$$

$$\left.\begin{aligned} \tau_{rz} &= 0, \\ \tau_{\theta z} &= -\frac{pc^{k+1}-q}{1-c^{2k}}g_k\rho^{k-1} - \frac{qc^{k-1}-p}{1-c^{2k}}g_{-k}c^{k+1}\rho^{-k-1}, \\ \sigma_z &= -\frac{1}{a_{33}}\left[\frac{pc^{k+1}-q}{1-c^{2k}}(a_{13}+ka_{23}-g_ka_{34})\rho^{k-1} + \right. \\ &\qquad \left. + \frac{qc^{k-1}-p}{1-c^{2k}}(a_{13}-ka_{23}-g_{-k}a_{34})c^{k+1}\rho^{-k-1}\right]. \end{aligned}\right\} \tag{42.2}$$

The stresses σ_z at the ends (and at any cross section) reduce to an axial force P, and $\tau_{\theta z}$ to a twisting moment M, which are equal to

$$\left.\begin{aligned} P &= -\frac{2\pi b^2}{a_{33}(1-c^{2k})}\left[(q-pc^{k+1})(1-c^{k+1}) \times \right. \\ &\quad \times \frac{a_{13}+ka_{23}-g_ka_{34}}{1+k} - (qc^{k-1}-p)(1-c^{k-1})c^2 \times \\ &\qquad \left. \times \frac{a_{13}-ka_{23}-g_{-k}a_{34}}{1-k}\right], \\ M &= -\frac{2\pi b^3}{1-c^{2k}}\left[(q-pc^{k+1})(1-c^{k+2})\frac{g_k}{2+k} - \right. \\ &\qquad \left. -(qc^{k-1}-p)(1-c^{k-2})c^3\frac{g_{-k}}{2-k}\right]. \end{aligned}\right\} \tag{42.3}$$

The stresses near the inner surface $r = a$ are

$$\left.\begin{aligned} \sigma_\theta &= pk\frac{1+c^{2k}}{1-c^{2k}} - qk\frac{2c^{k-1}}{1-c^{2k}}, \\ \tau_{\theta z} &= p\frac{g_{-k}-g_kc^{2k}}{1-c^{2k}} + q\frac{(g_k-g_{-k})c^{k-1}}{1-c^{2k}}; \end{aligned}\right\} \tag{42.4}$$

* A. N. Mitinskii considered the stresses in a drilled wooden tube treated as a body having cylindrical anisotropy ([101] and [102]).

and near the outer surface $r = b$,

$$\left.\begin{aligned} \sigma_\theta &= pk\frac{2c^{k+1}}{1-c^{2k}} - qk\frac{1+c^{2k}}{1-c^{2k}}, \\ \tau_{\theta z} &= -p\,(g_k - g_{-k})\frac{c^{k+1}}{1-c^{2k}} + q\frac{g_k - g_{-k}c^{2k}}{1-c^{2k}} \end{aligned}\right\} \tag{42.5}$$

In the general case of anisotropy the stresses σ_r, σ_θ are accompanied by a stress characteristic of torsion. The cross sections become warped since $W \neq 0$; the radii also become curved ($V \neq 0$).

If at each point there is a plane of elastic symmetry normal to the axis of the tube, then $a_{34} = \beta_{14} = \beta_{24} = g_k = g_{-k} = 0$, and the shearing stress $\tau_{\theta z}$ becomes zero. The normal stresses are determined by the previous formulas [the first and second formulas of (42.1)], but now k has a different value, namely

$$k = \sqrt{\frac{\beta_{11}}{\beta_{12}}}. \tag{42.6}$$

The cross sections do not warp, and the deformation is plane strain. The radii do not distort only in the case when every radial plane is a plane of elastic symmetry since their distortion depends on a_{16} and a_{26}. If the elastic constants are related by the equality

$$\beta_{11}\beta_{44} - \beta_{14}^3 = \beta_{22}\beta_{44} - \beta_{14}^2, \tag{42.7}$$

then $k = 1$ and the distribution of the stresses σ_r, σ_θ is the same as in a tube of isotropic homogeneous material:

$$\left.\begin{aligned} \sigma_r &= \frac{pc^2 - q}{1-c^2} + \frac{(q-p)\,c^2}{1-c^2}\,\frac{1}{\rho^2}, \\ \sigma_\theta &= \frac{pc^2 - q}{1-c^2} - \frac{(q-p)\,c^2}{1-c^2}\,\frac{1}{\rho^2}. \end{aligned}\right\} \tag{42.8}$$

If the ends are free from forces, formulas (41.13) must be used (where $k \neq 1$ or in the case just considered $k = 1$), and C and ϑ must be chosen so that the axial force P and the twisting moment M will be zero. In the general case of cylindrical anisotropy both constants are different from zero and the tube under normal pressure changes not only

its cross-sectional radii, but also its length and becomes twisted. No twisting occurs ($\vartheta = 0$) if there are planes of elastic symmetry normal to the axis.

43. Stress Distribution in a Hollow Homogeneous Cylinder under an Axial Force and a Bending Moment

Consider the elastic equilibrium of a tube of homogeneous material with cylindrical anisotropy, which has a finite length and is deformed by forces distributed over its ends. The manner in which the forces are distributed, i.e., the law governing their distribution is not specified, but it is known that at either end they reduce to a force of magnitude P directed along the axis to one side of the other. One end may be fixed, and the reaction arising at it is equal and opposite to the force P at the other end (Fig. 72).

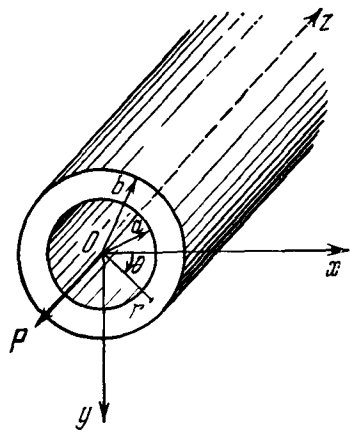

Fig. 72

The stress distribution is obtained by formulas (41.13) setting $p = q = 0$ in them and determining the constants C and ϑ from the end conditions (41.8), where $M = 0$. Since the procedure of solution for a tube with arbitrary cylindrical anisotropy is perfectly clear but leads to rather cumbersome formulas, we shall consider only a special case of anisotropy when there are planes of elastic symmetry normal to the geometrical axis z (which, it will be recalled, is at the same time the axis of anisotropy g).

The results reduce to the following. The notation is that used in Secs. 41 and 42, and in addition

$$k = \sqrt{\frac{\beta_{11}}{\beta_{12}}}, \quad h = \frac{a_{23} - a_{13}}{\beta_{11} - \beta_{22}}. \tag{43.1}$$

The stresses are determined by the formulas (see [81] and [26])

$$\left.\begin{aligned}
&\sigma_r=\frac{Ph}{T}\left(1-\frac{1-c^{k+1}}{1-c^{2k}}\rho^{k-1}-\frac{1-c^{k-1}}{1-c^{2k}}c^{k+1}\rho^{-k-1}\right)\\
&\sigma_\theta=\frac{Ph}{T}\left(1-\frac{1-c^{k+1}}{1-c^{2k}}k\rho^{k-1}+\frac{1-c^{k-1}}{1-c^{2k}}kc^{k+1}\rho^{-k-1}\right)\\
&\tau_{r\theta}=0;
\end{aligned}\right\}\tag{43.2}$$

$$\left.\begin{aligned}
&\tau_{rz}=\tau_{\theta z}=0,\\
&\sigma_z=\frac{P}{T}-\frac{Ph}{Ta_{33}}\left[a_{13}+a_{23}-\frac{1-c^{k+1}}{1-c^{2k}}\times\right.\\
&\left.\times(a_{13}+ka_{23})\rho^{k-1}-\frac{1-c^{k-1}}{1-c^{2k}}(a_{13}-ka_{23})c^{k+1}\rho^{-k-1}\right].
\end{aligned}\right\}\tag{43.3}$$

Here

$$T=\pi b^2(1-c^2)+\frac{2\pi hb^2}{a_{33}}\left[\frac{1-c^2}{2}(a_{13}+a_{23})-\right.$$
$$\left.-(1-c^{k+1})^2\frac{a_{13}+ka_{23}}{k+1}-(1-c^{k-1})^2c^2\frac{a_{13}-ka_{23}}{k-1}\right].\tag{43.4}$$

It is assumed, in all formulas, that $\beta_{11}\neq\beta_{22}$, and hence $k\neq 1$.

When the coefficients a_{13} and a_{23} are distinct, the stress σ_z is not uniformly distributed over a cross section and is accompanied by stresses σ_r, σ_θ in longitudinal sections characteristic for a tube under pressure. On the inner and outer surfaces we have: when $r=a$, $\sigma_r=0$,

$$\left.\begin{aligned}
&\sigma_\theta=\frac{Ph}{T}\,\frac{1+k-2kc^{k-1}+(k-1)c^{2k}}{1-c^{2k}},\\
&\sigma_z=\frac{P}{T}\left[1-\frac{ha_{23}}{a_{33}}\,\frac{1+k-2kc^{k-1}+(k-1)c^{2k}}{1-c^{2k}}\right];
\end{aligned}\right\}\tag{43.5}$$

when $r=b$, $\sigma_r=0$,

$$\left.\begin{aligned}
&\sigma_\theta=\frac{Ph}{T}\,\frac{1-k+2kc^{k+1}-(k+1)c^{2k}}{1-c^{2k}},\\
&\sigma_z=\frac{P}{T}\left[1-\frac{ha_{23}}{a_{33}}\,\frac{1-k+2kc^{k+1}-(k+1)c^{2k}}{1-c^{2k}}\right].
\end{aligned}\right\}\tag{43.6}$$

If the anisotropy of the cylinder is such that $a_{22}=a_{11}$, $a_{23}=a_{13}$, then it follows that $\beta_{11}=\beta_{22}$ and $k=1$. We

obtain a very simple, elementary stress distribution:

$$\left.\begin{aligned}\sigma_z &= \frac{P}{\pi b^2}\,\frac{1}{1-c^2},\\ \sigma_r = \sigma_\theta &= \tau_{r\theta} = \tau_{rz} = \tau_{\theta z} = 0,\end{aligned}\right\} \qquad (43.7)$$

as in an extended isotropic hollow bar of radii a and b.

Consider, now, the same hollow cylinder but deformed by forces distributed over its ends and reducing to a bending moment M at each end. As in the case of a force, the law of distribution of the forces is not specified; only M is given which acts in a plane passing through the geometrical axis (Fig. 73). The geometrical axis coincides with the axis of cylindrical anisotropy, and we consider, not the most general case of anisotropy, but the case of an orthotropic body in which through each point there pass three planes of elastic symmetry: the first is normal to the generators, i.e., coincident with the plane of the cross section, the second passes through the axis, and the third is orthogonal to these two.

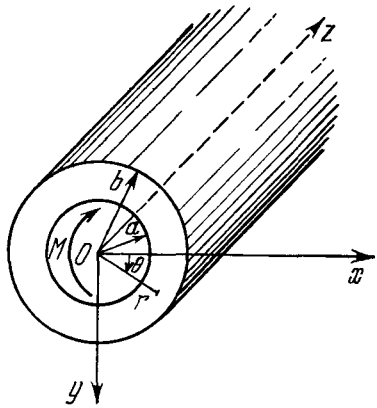

Fig. 73

Suppose that body forces are absent. By setting $\bar{U} = a_{36} = 0$ and also $A = 0$ in Eq. (39.9), we write it out as [81]

$$\beta_{22}\frac{\partial^4 F}{\partial r^4} + (2\beta_{12}+\beta_{66})\frac{1}{r^2}\frac{\partial^4 F}{\partial r^2\,\partial\theta^2} + \beta_{11}\frac{1}{r^4}\frac{\partial^4 F}{\partial\theta^4} +$$
$$+ 2\beta_{22}\frac{1}{r}\frac{\partial^3 F}{\partial r^3} - (2\beta_{12}+\beta_{66})\frac{1}{r^3}\frac{\partial^3 F}{\partial r\,\partial\theta^2} - \beta_{11}\frac{1}{r^2}\frac{\partial^2 F}{\partial r^2} +$$
$$+ (2\beta_{11}+2\beta_{12}+\beta_{66})\frac{1}{r^4}\frac{\partial^2 F}{\partial\theta^2} + \beta_{11}\frac{1}{r^3}\frac{\partial F}{\partial r} =$$
$$= \frac{2(a_{13}-a_{23})}{a_{33}}B\,\frac{\sin\theta}{r}. \qquad (43.8)$$

The solution of this equation is sought in the form

$$F = f(r) \sin \theta. \tag{43.9}$$

By integrating the resulting fourth-order equation for f, we obtain an expression for f and F:

$$F = \left(\frac{C_1}{m} r^{1+m} + \frac{C_2}{m} r^{1-m} + C_3 r \ln r + C_4 r + \frac{Bg}{2a_{33}} r^3 \right) \sin \theta. \tag{43.10}$$

Here C_1, C_2, C_3, C_4, B are arbitrary constants,

$$m = \sqrt{1 + \frac{\beta_{11} + 2\beta_{12} + \beta_{66}}{\beta_{22}}}, \quad g = \frac{a_{23} - a_{13}}{\beta_{11} + 2\beta_{12} + \beta_{66} - 3\beta_{22}}. \tag{43.11}$$

The stresses are determined by the formulas

$$\left.\begin{aligned} \sigma_r &= \frac{1}{r} \frac{\partial F}{\partial r} + \frac{1}{r^2} \frac{\partial^2 F}{\partial \theta^2}, \\ \sigma_\theta &= \frac{\partial^2 F}{\partial r^2}, \quad \tau_{r\theta} = -\frac{\partial^2}{\partial r \, \partial \theta} \left(\frac{F}{r} \right); \end{aligned}\right\} \tag{43.12}$$

$$\left.\begin{aligned} &\tau_{rz} = \tau_{\theta z} = 0, \\ &\sigma_z = Br \sin \theta - \frac{1}{a_{33}} (a_{13}\sigma_r + a_{23}\sigma_\theta) = \sigma_z'(r) \sin \theta. \end{aligned}\right\} \tag{43.13}$$

The constants are found from the boundary conditions

$$\sigma_r = \tau_{r\theta} = 0 \tag{43.14}$$

when $r = a$ and $r = b$, and from the end conditions

$$\left.\begin{aligned} &\int_0^{2\pi} \int_a^b \sigma_z r^2 \sin \theta \, dr \, d\theta = M, \\ &\int_0^{2\pi} \int_a^b \sigma_z r^2 \cos \theta \, dr \, d\theta = 0. \end{aligned}\right\} \tag{43.15}$$

The final formulas for the stresses are of the form

$$\left.\begin{aligned}
\sigma_r &= \frac{Mbg}{K}\left(\rho - \frac{1-c^{m+2}}{1-c^{2m}}\rho^{m-1} - \right.\\
&\qquad\left. - \frac{1-c^{m-2}}{1-c^{2m}}c^{m+2}\rho^{-m-1}\right)\sin\theta,\\
\sigma_\theta &= \frac{Mbg}{K}\left[3\rho - \frac{1-c^{m+2}}{1-c^{2m}}(1+m)\rho^{m-1} - \right.\\
&\qquad\left. - \frac{1-c^{m-2}}{1-c^{2m}}c^{m+2}(1-m)\rho^{-m-1}\right]\sin\theta,\\
\tau_{r\theta} &= -\frac{Mbg}{K}\left(\rho - \frac{1-c^{m+2}}{1-c^{2m}}\rho^{m-1} - \right.\\
&\qquad\left. - \frac{1-c^{m-2}}{1-c^{2m}}c^{m+2}\rho^{-m-1}\right)\cos\theta;
\end{aligned}\right\} \quad (43.16)$$

$$\begin{aligned}
\sigma_z &= \frac{M}{K}r\sin\theta - \frac{Mbg}{Ka_{33}}\left\{(a_{13}+3a_{23})\rho - \right.\\
&\qquad - \frac{1-c^{m+2}}{1-c^{2m}}[a_{13}+(1+m)a_{23}]\rho^{m-1} - \\
&\qquad\left. - \frac{1-c^{m-2}}{1-c^{2m}}c^{m+2}[a_{13}+(1-m)a_{23}]\rho^{-m-1}\right\}\sin\theta. \quad (43.17)
\end{aligned}$$

Here [the symbols c and ρ have the same meaning as in Sec. 41, formula (41.12)]

$$\begin{aligned}
K &= \frac{\pi b^4}{4}(1-c^4) - \\
&\quad - \frac{\pi b^4 g}{a_{33}}\left[(1-c^4)\frac{a_{13}+3a_{23}}{4} - \frac{(1-c^{m+2})^2}{1-c^{2m}}\frac{a_{13}+(1+m)a_{23}}{m+2} - \right.\\
&\qquad\left. - \frac{(1-c^{m-2})^2}{1-c^{2m}}c^4\frac{a_{13}+(1-m)a_{23}}{m-2}\right]. \quad (43.18)
\end{aligned}$$

The formulas are extremely simplified if Poisson's ratios expressing the contractions in a radial and a tangential direction when tension is applied in the axial direction are equal, i.e., $a_{13} = a_{23}$, and take the same form as for an isotropic tube deformed in pure bending by moments:

$$\sigma_z = \frac{M}{I}r\sin\theta, \quad \sigma_r = \sigma_\theta = \tau_{r\theta} = \tau_{rz} = \tau_{\theta z} = 0 \quad (43.19)$$

[$I = \frac{\pi b^4}{4}(1-c^4)$ is the moment of inertia of the ring with respect to a diameter].

44. Stress Distribution in a Continuously Non-homogeneous Hollow Cylinder under Pressure

A more complicated problem compared with the one considered in Sec. 42 is that of the elastic equilibrium of a continuously non-homogeneous hollow cylinder having cylindrical anisotropy and loaded on the inner and outer cylindrical surfaces by uniformly distributed normal pressures p and q (per unit area). We shall consider the plane deformation of a hollow cylinder for a special case when the axis of anisotropy coincides with the geometrical axis z. The cylinder is orthotropic, and the strain coefficients depend only on r; body forces are absent. The schematic representation of the problem is as in Fig. 71. The length of the cylinder is assumed to be infinite or finite, but the ends are fixed.

Let the plane of any section (for a bar of infinite length) or the plane of an end section (for a bar of finite length) be taken as the co-ordinate plane $r\theta$, with the z axis directed along the axis of anisotropy (the geometrical axis) and the polar x axis along an arbitrary radius.

Obviously, in the present case the stress distribution has rotational symmetry, i.e., the stress components are independent of r, and it is obtained assuming that the stress function depends only on r.*

Assuming that $F = F(r)$, and denoting $F'(r)$ by $\varphi(r)$, we obtain formulas for the stresses and equations for the displacement u_r ($u_\theta = 0$):

$$\left.\begin{aligned} \sigma_r = \frac{\varphi}{r}, \quad \sigma_\theta = \varphi', \quad \tau_{r\theta} = 0, \\ \tau_{\theta z} = \tau_{rz} = 0, \quad \sigma_z = -\frac{1}{a_{33}}(a_{13}\sigma_r + a_{23}\sigma_\theta) \end{aligned}\right\} \tag{44.1}$$

$$\left.\begin{aligned} u_r' = \beta_{11}\frac{\varphi}{r} + \beta_{12}\varphi', \\ u_r = \beta_{12}\varphi + \beta_{22}r\varphi'. \end{aligned}\right\} \tag{44.2}$$

---

* This condition is sufficient but not necessary since there are functions F depending on θ the corresponding stresses for which are independent of θ (for example, $F = C\theta$).

By eliminating the function u_r from (44.2), we find an equation for the function φ:

$$(\beta_{22}r\varphi' + \beta_{12}\varphi)' - \beta_{11}\frac{\varphi}{r} - \beta_{12}\varphi' = 0. \tag{44.3}$$

The general integral of this linear equation with variable coefficients is of the form

$$\varphi = C_1\varphi_1(r) + C_2\varphi_2(r). \tag{44.4}$$

To find linearly independent solutions, it is necessary to assign β_{ij} as functions of r. The constants C_1, C_2 are determined from the boundary conditions, which are written in this case as

$$\left.\begin{aligned} &\text{when } r = a, \quad \sigma_r = -p; \\ &\text{when } r = b, \quad \sigma_r = -q. \end{aligned}\right\} \tag{44.5}$$

Problems of this kind involving Eq. (44.3) and a more complicated equation for a non-orthotropic cylinder have been considered in [52] and [123] (see also [92] and Bibliographical Index [18]).

The problem is most easily solved in cases where the coefficients a_{ij} are proportional to some power of the distance r; several solutions have been obtained in [130] and [107].

Let the strain coefficients be given as

$$\left.\begin{aligned} a_{ij} &= \alpha_{ij}r^{-n}, \\ \beta_{ij} &= \left(\alpha_{ij} - \frac{\alpha_{i3}\alpha_{j3}}{\alpha_{33}}\right) r^{-n} = \gamma_{ij}r^{-n} \end{aligned}\right\} \tag{44.6}$$

(α_{ij} are given constants and n is any constant real number). Under these conditions of the problem Eq. (44.3) becomes elementary:

$$\varphi'' + \frac{1-n}{r}\varphi' - \frac{\gamma_n}{r^2}\varphi = 0, \tag{44.7}$$

where

$$\gamma_n = \frac{\gamma_{11} + n\gamma_{12}}{\gamma_{22}}. \tag{44.8}$$

The general integral of (44.7) is obtained as

$$\varphi = C_1 r^s + C_2 r^t. \tag{44.9}$$

Here

$$\begin{pmatrix} s \\ t \end{pmatrix} = 0.5\left(n \pm \sqrt{n^2 + 4\gamma_n}\right). \tag{44.10}$$

Substituting expression (44.9) in formulas (44.1), and determining the constants C_k from the boundary conditions (44.5), we find final expressions for the stresses:

$$\left.\begin{aligned} \sigma_r &= -pc\frac{\rho^{s-1}-\rho^{t-1}}{c^s-c^t} + q\frac{c^t\rho^{s-1}-c^s\rho^{t-1}}{c^s-c^t}, \\ \sigma_\theta &= -pc\frac{s\rho^{s-1}-t\rho^{t-1}}{c^s-c^t} + q\frac{sc^t\rho^{s-1}-tc^s\rho^{t-1}}{c^s-c^t}, \\ &\left(c=\frac{a}{b},\quad \rho=\frac{r}{b},\quad a<b\right). \end{aligned}\right\} \tag{44.11}$$

In [106] and [107] are given tables of numerical values of the stresses along a diameter of a ring loaded only on the inner contour ($q = 0$) for a material with

$$\left.\begin{aligned} E_r &= 2\cdot 10^5\rho^n, \\ E_\theta &= 0.95\cdot 10^5\rho^n, \\ \nu_{r\theta} &= 0; \end{aligned}\right\} \tag{44.12}$$

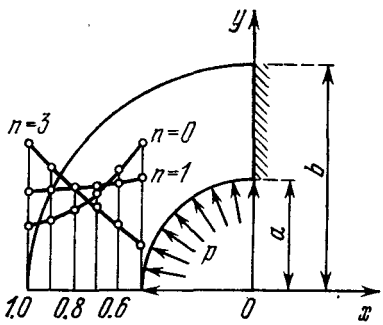

Fig. 74

n may be arbitrary. It is stated that these values have been obtained for oak wood. Table 18 gives numerical values of stresses taken from the papers cited above ($c = 0.5$). Figure 74 shows the distribution of σ_θ along a diameter for $c = 0$, 1, 3 (from [107], with slight modifications). Also given in [107] are graphs of σ_r for $n = 0$, 1, 3, but they will not be presented here.

Stress Values for Material (44.12) at Some Points of Tube Diameter **Table 18**

n	-1		0		0.5	
$\rho = \frac{r}{b}$	σ_r/p	σ_θ/p	σ_r/p	σ_θ/p	σ_r/p	σ_θ/p
0.5	—1.000	2.100	—1.000	1.554	—1.000	1.225
0.6	—0.548	1.410	—0.603	1.230	—0.637	1.108
0.7	—0.299	1.013	—0.357	1.021	—0.407	1.053
0.8	—0.152	0.763	—0.194	0.879	—0.223	0.250
0.9	—0.060	0.597	—0.081	0.771	—0.097	0.897
1.0	0	0.487	0	0.694	0	0.848

n	1		2		3	
$\rho = \frac{r}{b}$	σ_r/p	σ_θ/p	σ_r/p	σ_θ/p	σ_r/p	σ_θ/p
0.5	—1.000	1.190	—1.000	0.768	—1.000	0.523
0.6	—0.662	1.122	—0.698	0.840	—0.733	0.661
0.7	—0.425	1.000	—0.472	0.935	—0.523	0.845
0.8	—0.249	1.074	—0.286	1.030	—0.337	1.070
0.9	—0.110	1.070	—0.141	1.210	—0.168	1.344
1.0	0	1.068	0	1.280	0	1.650

45. Stress Distribution in a Circular Non-homogeneous Cylinder Having Cylindrical Anisotropy under an Axial Force and a Bending Moment

The solutions of problems obtained in Sec. 43 for a homogeneous hollow cylinder having cylindrical anisotropy can easily be generalized to the case of a continuously non-homogeneous cylinder with anisotropy of the same kind. These solutions have been obtained in [123] and [52] (see also [92]).

To avoid lengthy computations, the non-homogeneous cylinder is assumed to be orthotropic, with the axis of

anisotropy coinciding with the geometrical axis; however, the problem can easily be solved for a cylinder with any kind of cylindrical anisotropy and the axis of anisotropy coinciding with the geometrical axis, but the formulas for the stresses come out much more complicated in the final analysis. It is assumed that the load is distributed over the ends, but the law of distribution is not given; the load is specified by a resultant force vector and a resultant couple to which it reduces at each end. We shall consider two basic cases

(1) The forces at the end reduce to a force P directed along the axis g (which at taken, as before, as the z axis; Fig. 72).

Obviously, the stress distribution has rotational symmetry (if, of course, a_{ij} depend only on r, as is assumed to be the case). We introduce a new function of r:

$$\varphi = \frac{dE}{dr}. \tag{45.1}$$

Referring to the equations of Sec. 40, and setting $A = B = \vartheta = \bar{U} = 0$ in them, we obtain formulas for the stresses:

$$\sigma_r = \frac{\varphi}{r}, \quad \sigma_\theta = \varphi', \quad \tau_{r\theta} = 0, \tag{45.2}$$

$$\left.\begin{aligned} &\tau_{\theta z} = \tau_{rz} = 0, \\ &\sigma_z = \frac{C}{a_{33}} - \frac{1}{a_{33}}\left(a_{13}\frac{\varphi}{r} + a_{23}\varphi'\right), \end{aligned}\right\} \tag{45.3}$$

and equations for determining the displacement component u_r (u_θ may be set equal to zero)

$$\left.\begin{aligned} u_r' &= \beta_{11}\frac{\varphi}{r} + \beta_{12}\varphi' + \frac{a_{13}}{a_{33}}C, \\ u_r &= \beta_{12}\varphi + \beta_{22}r\varphi' + \frac{a_{23}}{a_{33}}Cr. \end{aligned}\right\} \tag{45.4}$$

Here β_{ij} are expressed in terms of the engineering elastic characteristics by formulas (40.2), and $a_{13}/a_{33} = -\nu_{zr}$,

$a_{23}/a_{33} = -\nu_{z\theta}$. By eliminating u_r from (45.4), we obtain an equation for φ:

$$(\beta_{22} r\varphi' + \beta_{12}\varphi)' - \beta_{12}\varphi' - \beta_{11}\frac{\varphi}{r} = \\ = C\left[\frac{a_{13}}{a_{33}} - \left(\frac{a_{23}r}{a_{33}}\right)'\right]. \qquad (45.5)$$

The general integral of this second-order non-homogeneous equations is written as

$$\varphi = C_1\varphi_1(r) + C_2\varphi_2(r) + C\varphi_0(r). \qquad (45.6)$$

The particular solution φ_0 of the non-homogeneous equation depends on how a_{13}, a_{23}, a_{33} or Poisson's ratios ν_{zr}, $\nu_{z\theta}$ are prescribed. The three unknown constants, C_1, C_2, C, entering into (45.6) are determined from the conditions on the cylindrical surfaces and at the ends: when $r = a$ and $r = b$,

$$\sigma_r = 0, \qquad (45.7)$$

when $z = 0$ and $z = l$,

$$\int_a^b \sigma_z r\,dr = \frac{P}{2\pi} \qquad (45.8)$$

In particular, if the coefficients a_{ij}, and hence β_{ij}, are proportional to some power of r, i.e.,

$$a_{ij} = \alpha_{ij} r^{-n}, \quad \beta_{ij} = \gamma_{ij} r^{-n}, \qquad (45.9)$$

Eq. (45.5) becomes

$$\varphi'' + \frac{1-n}{r}\varphi' - \frac{\gamma_n}{r^2}\varphi = Cgr^{n-1}, \qquad (45.10)$$

where

$$\gamma_n = \frac{\gamma_{11} + n\gamma_{12}}{\gamma_{22}}, \quad g = \frac{\alpha_{13} - \alpha_{23}}{\gamma_{22}\alpha_{33}}. \qquad (45.11)$$

Its general integral is

$$\varphi = C_1 r^s + C_2 r^t + Cm_n r^{n+1}. \qquad (45.12)$$

Here we have used the notation:

$$\left.\begin{aligned}\begin{pmatrix}s\\t\end{pmatrix}&=0.5\,(n\pm\sqrt{n^2+4\gamma_n}),\\ m_n&=g/(1+n-\gamma_n).\end{aligned}\right\}\qquad(45.13)$$

Substituting (45.12) in (45.2), we obtain expressions for the stresses σ_r and σ_θ containing three constants, C_1, C_2, C, which are all determined from conditions (45.7) and (45.8).

The final expressions for σ will not be given here. We only note that in a cylinder for which $a_{23}=a_{13}$ (in particular, in an isotropic cylinder) $\sigma_r=\sigma_\theta=0$ and only σ_z is not zero; depending on $a_{33}(r)$, this stress may be distributed non-uniformly over the section.

(2) The forces at the ends reduce to a bending moment M (see Fig. 73); there are no forces on the cylindrical surfaces, and no body forces. The coefficients β_{ij} depend, as before, only on one variable, r.

In this case we must proceed from Eq. (40.8).

By fixing the x axis in a certain manner in the end plane, we measure the polar angle from it and, setting $A=C=0$, seek the solution of Eq. (40.8) in the form

$$F=f(r)\sin\theta.\qquad(45.14)$$

We obtain a non-homogeneous equation for the function f:

$$\left(r\beta_{22}f''+\beta_{12}f'-\frac{\beta_{12}}{r}f\right)''-\left(\beta_{12}f''+\frac{\beta_{11}}{r}f'-\frac{\beta_{11}}{r^2}f\right)'-$$
$$-\frac{1}{r}\left(\beta_{12}f''+\frac{\beta_{11}}{r}f'-\frac{\beta_{11}}{r^2}f\right)-\frac{1}{r}\left(\beta_{66}f'-\frac{\beta_{66}}{r}f\right)'=$$
$$=B\left[\frac{a_{13}}{a_{33}}-\left(\frac{a_{23}r^2}{a_{33}}\right)''+\left(\frac{a_{13}r}{a_{33}}\right)'\right].\qquad(45.15)$$

The stress components must satisfy the conditions on the cylindrical surfaces

$$\sigma_r=\tau_{r\theta}=0\qquad(45.16)$$

when $r = a$ and $r = b$, and the conditions at the ends, where the forces must reduce to a moment,

$$\int_0^{2\pi}\int_a^b \sigma_z \sin\theta r^2\, dr\, d\theta = M \tag{45.17}$$

when $z = 0$ and $z = l$.

As in the case of an axial force, Eq. (45.15) reduces to the Euler-Laplace equation, which is easily integrable, if all strain coefficients are proportional to the same power of r:

$$a_{ij} = \alpha_{ij} r^{-n}. \tag{45.18}$$

Substituting in (45.15), we obtain the following equation:

$$f^{\mathrm{IV}} + \frac{2(1-n)}{r} f''' + [n(n-1) - \alpha]\frac{f''}{r^2} + \\ + (n+1)\alpha\left(\frac{f'}{f^3} - \frac{f}{r^4}\right) = 2B\frac{\alpha_{13}-\alpha_{23}}{\gamma_{22}\alpha_{33}} r^{n-1}. \tag{45.19}$$

where

$$\alpha = \frac{\gamma_{11} + \gamma_{12}(n+2) + \gamma_{66}}{\gamma_{22}} \tag{45.20}$$

The general integral of this equation is written as

$$f = C_1 r^{\lambda} + C_2 r^{\mu} + C_3 r^{1+n} + C_4 r + B l_n (n+2) r^{n+3}. \tag{45.21}$$

Here

$$\binom{\lambda}{\mu} = \frac{n+2}{2} \pm \sqrt{\left(\frac{n+2}{2}\right)^2 + \alpha}, \tag{45.22}$$

$$l_n = \frac{\alpha_{13}-\alpha_{23}}{\gamma_{22}\alpha_{33}(n+3-\alpha)}. \tag{45.23}$$

By using formulas (40.4) and (40.5), we find expressions for the stresses and then satisfy conditions (45.16) and (45.17).

The constant C_4 does not enter into the stresses. To the constant C_3 correspond multiple-valued displacements (proportional to the function $\theta\cos\theta$), and we must set $C_3 = 0$. The remaining three constants, C_1, C_2, B, are determined from the conditions on the lateral surfaces and at the ends. We leave detailed discussion at this point.

46. Axially Symmetric Distribution of Stress in a Circular Cylinder with Elastic Characteristics Varying Radially and Longitudinally

So far we have considered the elastic equilibrium of a hollow circular cylinder assuming that the elastic characteristics of a non-homogeneous cylinder (the strain coefficients) depend only on one variable, r. The problems become more complicated if the strain coefficients depend not only on r, but also on z measured parallel to the generators [93].

Let there be an elastic non-homogeneous hollow circular cylinder of finite length l loaded over the cylindrical surfaces

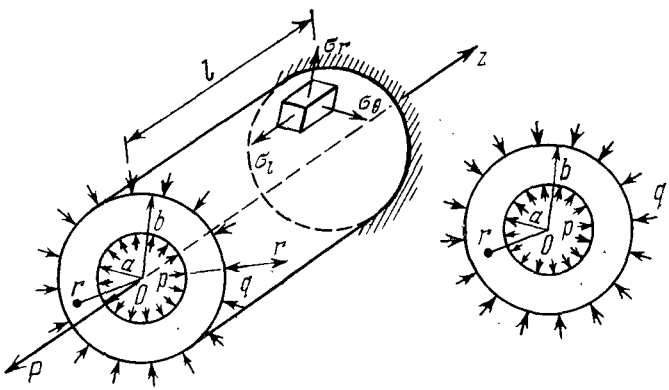

Fig. 75

$r = a$ and $r = b$ by uniformly distributed forces p and q per unit area, and at the ends by forces reducing to forces P directed along the geometrical axis. In the general case it is assumed that the body has cylindrical anisotropy and is orthotropic, with the axis of anisotropy directed along the geometrical axis. The directions of the co-ordinate axes and the forces are shown in Fig. 75.

We shall not solve the problem in all its fullness or work out the general theory that would answer the question: given the elastic characteristics as functions of the coordinates r, z and the external forces, determine stresses in each

particular case. Instead, we shall only consider the inverse problem: establish how the elastic characteristics must vary with r and z for the qualitative picture of stress distribution to be the same as in a homogeneous cylinder ($\tau_{\theta z} = \tau_{rz} = \tau_{r\theta} = 0$, σ_r, σ_θ, σ_z are functions of r only) and find these stresses. We restrict our attention to a special case, namely we assume that all strain coefficients are the products of functions of only the variable r and a function of only the variable z, the same for all coefficients:

$$a_{ij} = b_{ij}(r)\, Z(z). \tag{46.1}$$

The generalized Hooke's law equations are of the form

$$\left.\begin{aligned} \varepsilon_r &= [b_{11}(r)\,\sigma_r + b_{12}(r)\,\sigma_\theta + b_{13}(r)\,\sigma_z]\, Z(z), \\ \varepsilon_\theta &= [b_{12}\sigma_r + b_{22}\sigma_\theta + b_{23}\sigma_z]\, Z(z), \\ \varepsilon_z &= [b_{13}\sigma_r + b_{23}\sigma_\theta + b_{33}\sigma_z]\, Z(z), \\ \gamma_{rz} &= 0. \end{aligned}\right\} \tag{46.2}$$

Since the stresses depend only on r (as in Lamé's problem and in the problem of extension by a force), it follows from the first three equations that*

$$u_r = U_r(r)\, Z(z), \qquad w = W_r(r) \int Z(z)\, dz + w_0(r). \tag{46.3}$$

On cancelling $Z(z)$, Eqs. (46.2) become

$$\left.\begin{aligned} U_r' &= b_{11}\sigma_r + b_{12}\sigma_\theta + b_{13}\sigma_z, \\ U_r &= r\,(b_{12}\sigma_r + b_{22}\sigma_\theta + b_{23}\sigma_z), \\ W_r &= b_{13}\sigma_r + b_{23}\sigma_\theta + b_{33}\sigma_z, \\ U_r(r)\, Z'(z) &+ W_r'(r) \int Z\, dz + w_0'(r) = 0. \end{aligned}\right\} \tag{46.4}$$

The fourth equation of (46.4) can only be satisfied by setting

$$Z' = \alpha^2 \int Z\, dz; \tag{46.5}$$

$$w_0 = \text{const}; \tag{46.6}$$

$$U_r = -\frac{W_r'}{\alpha^2}; \tag{46.7}$$

* The subscript r on U_r and W_r indicates that these quantities are functions of the variable r only.

α is an arbitrary real or pure imaginary number. The value $\alpha = 0$ corresponds to a homogeneous body. The number α cannot be complex since otherwise the displacement u_r turns out complex; also, the factor Z is always a real quantity (if b_{ij} are real). The constant w_0 expressing rigid-body displacements along the axis may be arbitrary if the ends are not fixed.

By differentiating (46.5) with respect to z, and integrating the resulting elementary second-order equation, we obtain:

(1) for a real α,

$$Z = A \cosh \alpha z + B \sinh \alpha z, \tag{46.8}$$

$$a_{ij} = b_{ij}(r)(A \cosh \alpha z + B \sinh \alpha z). \tag{46.9}$$

(2) for a pure imaginary $\alpha = i\alpha_1$,

$$Z = A \cos \alpha_1 z + B \sin \alpha_1 z, \tag{46.10}$$

$$a_{ij} = b_{ij}(r)(A \cos \alpha_1 z + B \sin \alpha_1 z). \tag{46.11}$$

Here A, B are real constants, which, however, cannot be entirely arbitrary since certain restrictions are imposed on a_{ij}.

In the case under consideration it is better to manipulate with the generalized Hooke's law equations solved for the stress components, and not inversely; all stresses are then expressed in terms of the single function W_r for which the equilibrium equation for a continuous medium yields a third-order equation. Indeed, by solving (46.4) for σ, and expressing [from (46.7)] U_r in terms of W_r, we obtain

$$\left.\begin{aligned}
\sigma_r &= -B_{11}\frac{W_r''}{\alpha^2} - B_{12}\frac{W_r'}{\alpha^2 r} + B_{13}W_r,\\
\sigma_\theta &= -B_{12}\frac{W_r''}{\alpha^2} - B_{22}\frac{W_r'}{\alpha^2 r} + B_{28}W_r,\\
\sigma_z &= -B_{13}\frac{W_r''}{\alpha^2} - B_{23}\frac{W_r'}{\alpha^2 r} + B_{33}W_r
\end{aligned}\right\} \tag{46.12}$$

[B_{ij} are coefficients reciprocal to b_{ij}, which are obtained by solving Eqs. (46.4) for σ].

Substituting (46.12) in the equation

$$\sigma_r' + \frac{\sigma_r - \sigma_\theta}{r} = 0, \tag{46.13}$$

we obtain an equation that must be satisfied by W_r:

$$B_{11}W_r'' + \left(B_{11}' - \frac{B_{11}}{r}\right) W_r'' + \left(\frac{B_{12}'}{r} - \frac{B_{22}}{r^2} - \alpha^2 B_{13}\right) W_r' + \\ + \left(\frac{B_{23} - B_{13}}{r} - B_{13}'\right) \alpha^2 W_r = 0. \tag{46.14}$$

The three arbitrary constants entering into the general integral of this equation are entirely determined from the conditions on the cylindrical surfaces and at the ends, and the problem is thus completely solved. Because of limited space, however, we shall not investigate an orthotropic body with arbitrary orthotropy, but restrict ourselves to an example where a non-homogeneous body is isotropic, its Young's modulus $E(z)$ depends on only one variable, z, and Poisson's ratio ν is a constant.

For a real α,

$$E = \frac{E_0}{A \cosh \alpha z + B \sinh \alpha z}; \tag{46.15}$$

for a pure imaginary $\alpha = i\alpha_1$,

$$E = \frac{E_0}{A \cos \alpha_1 z + B \sin \alpha_1 z}. \tag{46.16}$$

In this case the relation between the stress components and the axial displacements (46.12), and the displacement equation (46.14) become

$$\left.\begin{aligned} \sigma_r &= \beta E_0 \left[\mu^2 \left(W_r - \frac{W_r'}{\alpha^2 r}\right) - \frac{W_r''}{\alpha^2}\right], \\ \sigma_\theta &= \beta E_0 \left[\mu^2 W_r - \frac{W_r'}{\alpha^2 r} - \frac{\mu^2}{\alpha^2} W_r''\right], \\ \sigma_z &= \beta E_0 \left[W_r - \frac{\mu^2}{\alpha^2}\left(\frac{W_r'}{r} + W_r''\right)\right]; \end{aligned}\right\} \tag{46.17}$$

$$W_r''' + \frac{1}{r} W_r'' - \left(\mu^2\alpha^2 + \frac{1}{r^2}\right) W_r' = 0. \tag{46.18}$$

Here we have introduced the notation: β, μ = constants related to Poisson's ratio by the expressions

$$\beta = \frac{1}{(1+\nu)(1-2\nu)}, \quad \mu = \sqrt{\frac{\nu}{1-\nu}}. \tag{46.19}$$

If α is real, the general integral of Eq. (46.18) is expressed in terms of modified Bessel and Hankel functions of the first order: *

$$W_r' = C_1 I_1 (\alpha\mu r) + C_2 K_1 (\alpha\mu r). \tag{46.20}$$

For a pure imaginary $\alpha = i\alpha_1$, we have, instead of (46.20),

$$W_r' = C_1 J_1 (\alpha_1\mu r) + C_2 N_1 (\alpha_1\mu r), \tag{46.21}$$

where J_1 is the Bessel function, N_1 is the Neumann function.

By using the function W_r', we determine W, the stresses, and displacements. The three constants, which enter into the expressions for the displacements, are found from the (exact) conditions on the lateral surface and the (approximate) conditions at the ends. We leave detailed discussion of the general case at this point, except note that plane strain in a cylinder with a modulus varying along its length under forces p and q is not possible.

Indeed, by setting $w = W_r = 0$, we obtain $U_r' = u = 0$ from (46.3) to (46.7), and hence $\sigma_r = \sigma_\theta = \sigma_z = 0$ from the generalized Hooke's law equations. Assuming that $w = 0$ (when Z is not a constant), we obtain a contradictory result.

47. Extension by an Axial Force of a Solid Cylinder with a Modulus Varying Only along Its Length

Consider an example [93]. Let there be a circular isotropic non-homogeneous cylinder, solid (without a cavity), for which Poisson's ratio is a constant, and Young's modulus E varies along the length. One end whose plane is taken as the plane xy or $r\theta$ (Fig. 76) is acted on by distributed forces the law of distribution is not given. The forces reduce to a given axial force P. The other end, $z = l$, is fixed in a certain way. The lateral surface is not loaded and body forces are absent.

* See, for example, [19] (pp. 848 and 867).

In the present case, in the expressions for the stresses (46.17) all terms that increase indefinitely as the geometrical axis z is approached must be rejected, and for this one of the three constants must be set equal to zero. The remaining two constants are determined from the conditions

$$(\sigma_r)_{r=b}=0, \qquad \int_0^b \sigma_z r\,dr=\frac{P}{2\pi}. \tag{47.1}$$

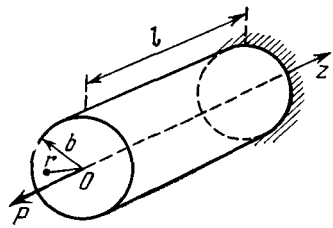

Fig. 76

Consider the case when Young's modulus varies along the length according to an exponential law:

$$E=E_0 e^{-\frac{n\pi z}{l}}. \tag{47.2}$$

We give the final results. The expressions for the stresses may be written as

$$\sigma_r=\frac{P}{\pi b^2}k_1, \qquad \sigma_\theta=\frac{P}{\pi b^2}k_2, \qquad \sigma_z=\frac{P}{\pi b^2}k_3, \tag{47.3}$$

where

$$\left.\begin{aligned} k_1&=\frac{\nu}{1+\nu}\left[\frac{1}{\rho}\frac{I_1(n\pi\mu\rho)}{I_1(n\pi\mu)}-1\right],\\ k_2&=\frac{\nu}{1+\nu}\left\{\frac{1}{I_1(n\pi\mu)}\left[n\pi\mu I_0(n\pi\mu\rho)-\right.\right.\\ &\qquad\left.\left.-\frac{1}{\rho}I_1(n\pi\mu\rho)\right]-1\right\},\\ k_3&=\frac{1}{1+\nu}\left[n\pi\mu\frac{I_0(n\pi\mu\rho)}{I_1(n\pi\mu)}-1+\nu\right] \quad (\rho=r/b). \end{aligned}\right\} \tag{47.4}$$

In a homogeneous bar ($n=0$), $\sigma_r=\sigma_\theta=0$, $\sigma_z=P/\pi b^2$. Calculations show that when $0<n\leqslant 1$ the stresses σ_r and σ_θ at points of a radius are numerically much less than σ_z. For example, for $\nu=1/3$ and $n=0.9$, at the centre ($\rho=0$) $k_1=k_2=-0.093$, $k_3=0.443$, and near the cylindrical surface ($\rho=1$) $k_1=0$, $k_2=0.217$, $k_3=1.649$.

Figure 77 shows the variation of the stress factors k_1, k_2, k_3 along a radius of a bar for which Poisson's ratio is 1/3 and $n = 0.9$. A dashed straight line corresponds to a similar homogeneous bar ($n = 0$, $k_3 = 1$). As seen from

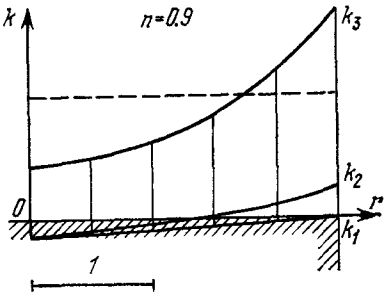

Fig. 77

Fig. 77, for the given ν and n the stress σ_z is distributed over the section in a highly non-uniform manner and is accompanied by compressive stresses σ_r and σ_θ over the entire section and over its major part, respectively.

48. Bending of a Plane Curved Rod by Moments and a Force Applied at Its Ends

Closely related to the problem of the elastic equilibrium of a non-homogeneous cylinder under a force and a moment is the problem of the bending of a plane curved rod by moments and a force acting in the middle plane.

Let there be a plane rod of uniform thickness h having cylindrical anisotropy, non-homogeneous, and bounded in plan by two concentric circles of radii a and b and two radial segments forming an arbitrary angle $\alpha \leqslant \pi/2$. We shall not assume in the general case that the rod is orthotropic; but it is supposed that the middle plane coincides with a plane of elastic symmetry and the axis of anisotropy passes normally to this plane through the common centre of the circles. The axis of anisotropy is taken as the z axis of a cylindrical co-ordinate system, with the x axis, from which the polar angles θ are measured, directed according to convenience with regard to the load, which is assumed

to act in planes parallel to the middle plane and symmetrical with respect to this plane.

We consider the average stresses, strains, and displacements across the thickness. The strain coefficients a_{ij} from the generalized Hooke's law equations are assumed to be arbitrary functions of the variable r and even functions of the co-ordinate z, but independent of θ. The generalized Hooke's law equations relating the stresses and displacements averaged across the thickness are written for a non-orthotropic body as (horizontal bars denoting the averaged values of the stresses, strains, and coefficients a_{ij} are omitted):

$$\left.\begin{aligned} \varepsilon_r &= a_{11}\sigma_r + a_{12}\sigma_\theta + a_{16}\tau_{r\theta}, \\ \varepsilon_\theta &= a_{12}\sigma_r + a_{22}\sigma_\theta + a_{26}\tau_{r\theta}, \\ \gamma_{r\theta} &= a_{16}\sigma_r + a_{26}\sigma_\theta + a_{66}\tau_{r\theta}. \end{aligned}\right\} \tag{48.1}$$

The three average components of stress are expressed in terms of the stress function:

$$\sigma_r = \frac{1}{r}\frac{\partial F}{\partial r} + \frac{1}{r^2}\frac{\partial^2 F}{\partial \theta^2}, \quad \sigma_\theta = \frac{\partial^2 F}{\partial r^2}, \quad \tau_{r\theta} = -\frac{\partial^2}{\partial r\,\partial\theta}\left(\frac{F}{r}\right) \tag{48.2}$$

(body forces are assumed to be absent). On eliminating the displacements u_r and u_θ from (48.1), we obtain a more general equation for the function F compared with (44.3) (with β_{ij} replaced by a_{ij}):

$$\begin{aligned} &\left(\frac{\partial^2}{\partial\theta^2} - r\frac{\partial}{\partial r}\right)\left[a_{11}\left(\frac{1}{r}\frac{\partial F}{\partial r} + \frac{1}{r^2}\frac{\partial^2 F}{\partial\theta^2}\right) + a_{12}\frac{\partial^2 F}{\partial r^2} - \right. \\ &\quad \left. - a_{16}\frac{\partial^2}{\partial r\,\partial\theta}\left(\frac{F}{r}\right)\right] + r\frac{\partial^2}{\partial r^2}\left[a_{12}\left(\frac{\partial F}{\partial r} + \frac{1}{r}\frac{\partial^2 F}{\partial\theta^2}\right) + \right. \\ &\quad \left. + a_{22}r\frac{\partial^2 F}{\partial r^2} - a_{26}r\frac{\partial^2}{\partial r\,\partial\theta}\left(\frac{F}{r}\right)\right] - \\ &\quad - \frac{\partial^2}{\partial r\,\partial\theta}\left[a_{16}\left(\frac{\partial F}{\partial r} + \frac{1}{r}\frac{\partial^2 F}{\partial\theta^2}\right) + a_{26}r\frac{\partial^2 F}{\partial r^2} - \right. \\ &\quad \left. - a_{66}r\frac{\partial^2}{\partial r\partial\theta}\left(\frac{F}{r}\right)\right] = 0, \end{aligned} \tag{48.3}$$

and the corresponding conditions for the average stresses across the thickness.

Consider two simple cases of bending separately [91].

(1) *Pure bending by moments.* A plane curved rod is given, as described above. The curved sides $r = a$ and $r = b$ are not loaded or fixed; the end surfaces are loaded by forces reducing at both ends to opposite moments M. For definiteness, one end is assumed to be fixed, the other free.

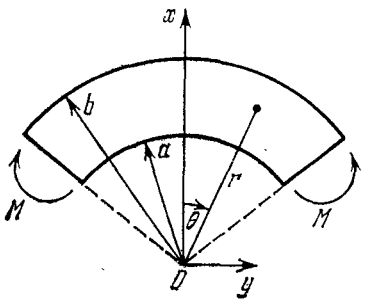

Fig. 78

Let the x axis be directed along the axis of symmetry of the figure (Fig. 78). The stress components σ_r, $\tau_{r\theta}$ are zero on the curved sides and reduce to moments M on the straight sides. As in the case of a homogeneous rod with constant a_{ij}, the solution is obtained with the help of a stress function depending only on the single variable r. Assuming

$$\varphi = dF(r)/dr, \tag{48.4}$$

we have

$$\sigma_r = \varphi/r, \quad \sigma_\theta = \varphi', \quad \tau_{r\theta} = 0. \tag{48.5}$$

The equation for φ may be written, from (48.3), as

$$(a_{22}r\varphi' + a_{12}\varphi)' - (a_{12}\varphi' + a_{11}\varphi/r) = C. \tag{48.6}$$

The constants entering into the general integral of this second-order equation are found from the conditions on the curved sides and from the integral reducibility conditions on the straight sides. The conditions on the straight sides are identical, so that there are always three conditions to be satisfied and just as many arbitrary constants, C, C_1, C_2.

If the coefficients a_{ij} depend on r in an arbitrary manner, the solution of Eq. (48.6) presents some difficulty; the solution is only conceivable for particular specifications of a_{ij}, including those considered by M. M. Plotnikov who studied the state of stress in a tube with various types of non-homo-

geneity (Sec. 44). The simplest case is the one where all a_{ij} are proportional to the same power of the distance r:

$$a_{ij} = \alpha_{ij} r^{-n}. \tag{48.7}$$

We introduce the notation of Sec. 44 replacing γ_{ij} by α_{ij} throughout [see formulas (44.8) and (44.10)]:

$$\left.\begin{aligned} c = a/b > 1, \quad \rho = r/b, \quad \gamma_n = (\alpha_{11} + n\alpha_{12})/\alpha_{22}, \\ \begin{pmatrix} s \\ t \end{pmatrix} = 0.5\,(n \pm \sqrt{n^2 + 4\gamma_n}). \end{aligned}\right\} \tag{48.8}$$

On opening the brackets, we rewrite (48.6) as*

$$\varphi'' + \frac{1-n}{r}\varphi' - \frac{\gamma_n}{r^2}\varphi = \frac{C}{\alpha_{22}} r^{n-1}. \tag{48.9}$$

The general integral is

$$\varphi = C_1 r^s + C_2 r^t + C_0 r^{n+1} \quad [C_0 = C/\alpha_{22}(1 + n - \gamma_n)] \tag{48.10}$$

By satisfying all three conditions, we obtain expressions for the stresses:

$$\left.\begin{aligned} \sigma_r &= -\frac{M}{b^2 hg}\left[\frac{c^t - c^{n+1}}{c^s - c^t}\rho^{s-1} + \right. \\ &\qquad \left. + \frac{c^{n+1} - c^s}{c^s - c^t}\rho^{t-1} + \rho^n\right], \\ \sigma_\theta &= -\frac{M}{b^2 hg}\left[\frac{c^t - c^{n+1}}{c^s - c^t} s\rho^{s-1} + \right. \\ &\qquad \left. + \frac{c^{n+1} - c^s}{c^s - c^t} t\rho^{t-1} + (n+1)\rho^n\right], \\ \tau_{r\theta} &= 0. \end{aligned}\right\} \tag{48.11}$$

Here the denominator g is given by

$$g = \frac{(c^t - c^{n+1})(1 - c^{s+1})}{c^s - c^t}\frac{s}{s+1} + \\ + \frac{(c^{n+1} - c^s)(1 - c^{t+1})}{c^s - c^t}\frac{t}{t+1} + \frac{n+1}{n+2}(1 - c^{n+2}). \tag{48.12}$$

---

* We can just as well use the integral of Eq. (45.5) in the form of (45.12); the final result is unaltered.

The normal stresses σ_θ on the cross section at the inner and outer edges are

$$(\sigma_\theta)_{r=a} = -\frac{M}{b^2hg}\,\frac{(n+1-s)\,c^{n+s}-(n+1-t)\,c^{n+t}+(s-t)\,c^{s+t-1}}{c^s-c^t}; \tag{48.13}$$

$$(\sigma_\theta)_{r=b} = -\frac{M}{b^2hg}\,\frac{(n+1-t)\,c^s-(n+1-s)\,c^t-(s-t)\,c^{n+1}}{c^s-c^t}. \tag{48.14}$$

In a homogeneous rod, all coefficients a_{ij} are constant and

$$n=0, \quad \gamma_n=\sqrt{\frac{a_{11}}{a_{22}}}=k. \tag{48.15}$$

The stress components are [27]

$$\left.\begin{aligned}
\sigma_r &= -\frac{M}{b^2hg}\left[1-\frac{1-c^{k+1}}{1-c^{2k}}\rho^{k-1}-\right.\\
&\qquad\left.-\frac{1-c^{k-1}}{1-c^{2k}}c^{k+1}\rho^{-k-1}\right],\\
\sigma_\theta &= -\frac{M}{b^2hg}\left[1-\frac{1-c^{k+1}}{1-c^{2k}}k\rho^{k-1}+\right.\\
&\qquad\left.+\frac{1-c^{k-1}}{1-c^{2k}}c^{k+1}k\rho^{-k-1}\right],\\
\tau_{r\theta} &= 0.
\end{aligned}\right\} \tag{48.16}$$

In this case

$$g=\frac{1-c^2}{2}+\frac{k}{k+1}\,\frac{(1-c^{k+1})^2}{1-c^{2k}}+\frac{kc^2}{k-1}\,\frac{(1-c^{k-1})^2}{1-c^{2k}}. \tag{48.17}$$

(2) *Bending by a force.* Suppose that a plane rod is fixed at one end, and forces distributed over the other end reduce to a force P acting in the middle plane and forming an angle ω with the radius (Fig. 79). To avoid lengthy computations and cumbersome formulas in deriving expressions for the stresses, we shall consider a simplified case, namely that of an orthotropic body in which one of the planes of elastic symmetry coincides with the middle plane, others pass through radii,

and still others are orthogonal to each pair of the first two sets of planes. In this case, too, all the coefficients are assumed to be proportional to the same power of r, i.e., they are given by formulas (48.7).

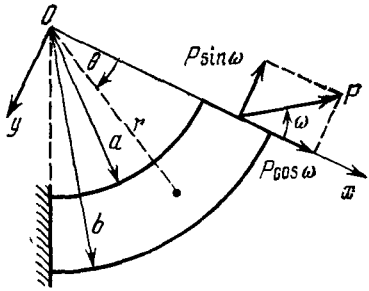

Fig. 79

The stress function must be sought in the form

$$F = f_1(r)\cos\theta + f_2(r)\sin\theta, \tag{48.18}$$

as in the case of a homogeneous rod.

We introduce the notation:

$$\alpha = \frac{\alpha_{12}(n+2)+\alpha_{11}+\alpha_{66}}{\alpha_{22}}; \tag{48.19}$$

further, λ and μ are introduced, defined by formula (45.22); all γ_{ij} must be replaced by the corresponding α_{ij};

$$g_1 = \frac{(c^{\mu}-c^{n+1})(1-c^{\lambda-1})}{c^{\lambda}-c^{\mu}}\frac{1}{\lambda-1}+$$
$$+\frac{(c^{n+1}-c^{\lambda})(1-c^{\mu-1})}{c^{\lambda}-c^{\mu}}\frac{1}{\mu-1}+\frac{1-c^{n}}{n}. \tag{48.20}$$

The equations for the functions f_1 and f_2 are obtained as

$$f_i^{\mathrm{IV}}+\frac{2(1-n)}{r}f_i'''+[(n-1)n-\alpha]\frac{1}{r^2}f_i''+$$
$$+\alpha(n+1)\left(\frac{f_i'}{r^3}-\frac{f_i}{r^4}\right)=0. \tag{48.21}$$

From this

$$f_i = A_i r^{\lambda}+B_i r^{\mu}+C_i r^{1+n}+D_i r \quad (i=1,\ 2). \tag{48.22}$$

All constants are determined from the conditions on the curved sides and at the loaded end; $D_1 = D_2 = 0$ since to these constants correspond parts of the function F proportional to x and y, and hence zero stresses.

The final expressions for the stresses are

$$\left.\begin{aligned}
\sigma_r &= \frac{P}{hg_1 r}\left(\frac{c^\mu - c^{n+1}}{c^\lambda - c^\mu}\rho^{\lambda-1} + \right.\\
&\qquad \left. + \frac{c^{n+1} - c^\lambda}{c^\lambda - c^\mu}\rho^{\mu-1} + \rho^n\right)\sin(\theta+\omega),\\
\sigma_\theta &= \frac{P}{hg_1 r}\left[\frac{c^\mu - c^{n+1}}{c^\lambda - c^\mu}\lambda\rho^{\lambda-1} + \right.\\
&\qquad \left. + \frac{c^{n+1} - c^\lambda}{c^\lambda - c^\mu}\mu\rho^{\mu-1} + (n+1)\rho^n\right]\sin(\theta+\omega),\\
\tau_{r\theta} &= -\sigma_r \cot(\theta+\omega).
\end{aligned}\right\} \qquad (48.23)$$

The normal stresses attain maximum values at radial sections perpendicular to the line of action of the force (where the sine is ± 1) or at the built-in section, and the shearing stresses, on the line of action of the force. The values of σ_θ at the radial section $\theta = \theta_0$ at the inner and outer edges are determined by formulas (48.13) and (48.14) in which s, t must be replaced by λ, μ, and the factor $-\frac{M}{b^2hg}$ by $\frac{P}{ahg_1}\sin(\theta_0 + \omega)$ and $\frac{P}{bhg_1}\sin(\theta_0 + \omega)$, respectively.

GENERALIZED TORSION AND TORSION OF BARS

Chapter 6

This chapter presents the general theory and special cases of elastic equilibrium described as generalized torsion; when the elastic symmetry is well developed, these special cases transform into the ordinary or pure torsion of bars with a straight axis. The theory of generalized torsion was first worked out by Voigt [38], and the rigorous theory of pure torsion was developed by Saint-Venant [110]. There are a great many works on the theory of simple or pure torsion, and among these we may mention the large monograph by N. Kh. Arutyunyan and B. L. Abramyan [4]. This monograph contains an extensive bibliography on torsion compiled into annotated lists. There is also the author's monograph devoted to torsion [28].

49. Generalized Torsion of Homogeneous Bars with Rectilinear Anisotropy

Consider a homogeneous cylindrical or prismatic bar with rectilinear anisotropy of the most general kind (21 or 18 elastic constants), which is in equilibrium under forces distributed over the ends and reducing to twisting moments. The lateral surface is free from external forces; body forces are absent. The region of the section is assumed to be finite (simply connected or multiply connected). Let the origin of co-ordinates be taken at the centroid of the end section, with the z axis directed parallel to the generators (along the geometrical axis of the bar), and the x and y axes along the principal axes of inertia of the section (Fig. 80). The generalized Hooke's law equations for such a body are of the form of (3.8).

If the planes of the cross sections are planes of elastic symmetry, the bar undergoes twisting deformation whose main feature is a rotation of one section relative to another about the z axis with a simultaneous warping of the sections (except for a circular and a ring section), all sections becoming warped in the same manner. The state of stress is characterized by the fact that only two stress components out of six are not zero.

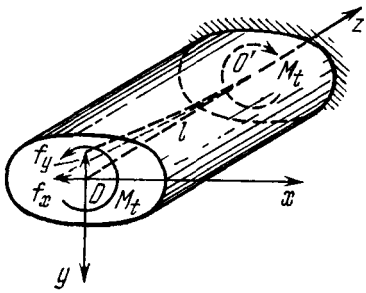

Fig. 80

The problem becomes considerably more complicated if the plane of the cross section is not a plane of elastic symmetry. The deformation produced by twisting moments and the state of stress are more complex, and this case of elastic equilibrium is termed generalized torsion [77], [28].

To derive the general equations for generalized torsion, we turn to the equations for the general case of elastic equilibrium in which the stress components do not vary along lhe length (see Secs. 18, 19) and set

$$\bar{U} = P = M_1 = M_2 = X_n = Y_n = 0. \tag{49.1}$$

We obtain

$$\left.\begin{aligned} \sigma_x = \frac{\partial^2 F}{\partial y^2}, \quad \sigma_y = \frac{\partial^2 F}{\partial x^2}, \quad \tau_{xy} = -\frac{\partial^2 F}{\partial x\, \partial y}, \\ \tau_{xz} = \frac{\partial \psi}{\partial y}, \quad \tau_{yz} = -\frac{\partial \psi}{\partial x}; \end{aligned}\right\} \tag{49.2}$$

$$\sigma_z = \frac{1}{a_{33}}(Ax + By + C) - \\ - \frac{1}{a_{33}}(a_{13}\sigma_x + a_{23}\sigma_y + \ldots + a_{36}\tau_{xy}). \tag{49.3}$$

The functions F and ψ satisfy Eqs. (19.2) and (19.3) and the boundary conditions

$$\frac{\partial F}{\partial x} = c_1, \quad \frac{\partial F}{\partial y} = c_2, \quad \psi = c_3. \tag{49.4}$$

In the case of a simply connected region the constants c_i may be set equal to zero, so that the boundary conditions become very simple, namely the first derivatives of F and the function ψ itself must be zero on the contour. In addition the stresses at the ends satisfy conditions (19.9), which in the present case reduce to

$$\left.\begin{aligned} &\iint \tau_{xz}\,dx\,dy=0, && \iint \sigma_z y\,dx\,dy=0,\\ &\iint \tau_{yz}\,dx\,dy=0, && \iint \sigma_z x\,dx\,dy=0,\\ &\iint \sigma_z\,dx\,dy=0, && \iint (\tau_{yz}x-\tau_{xz}y)\,dx\,dy=M_t. \end{aligned}\right\} \tag{49.5}$$

In the case of a simply connected region the third condition of (49.5) becomes

$$2\iint \psi\,dx\,dy=M_t. \tag{49.6}$$

From conditions (49.5), the constants A, B, C, ϑ are expressed in terms of the twisting moment. Since the lateral surface of the body is not loaded and body forces are absent, we obtain, from Eqs. (49.5) and (49.6), using relations (19.18) to (19.20),

$$A=0.5a_{34}\frac{M_t}{I_2},\quad B=-0.5a_{35}\frac{M_t}{I_1},\quad C=0 \tag{49.7}$$

(I_1, I_2 are the principal moments of inertia of the section).

The formula for the component σ_z is

$$\sigma_z=\frac{M_t}{2a_{33}}\left(\frac{a_{34}}{I_2}x-\frac{a_{35}}{I_1}y\right)-$$
$$-\frac{1}{a_{33}}(a_{13}\sigma_x+a_{23}\sigma_y+\ldots+a_{36}\tau_{xy}). \tag{49.8}$$

The stress functions satisfy the system of equations

$$\left.\begin{aligned} &L_4F+L_3\psi=0,\\ &L_3F+L_2\psi=-2\vartheta+\frac{M_t}{2a_{33}}\left(\frac{a_{34}^2}{I_2}+\frac{a_{35}^2}{I_1}\right). \end{aligned}\right\} \tag{49.9}$$

Here L_4, L_3, L_2 are differential operators whose expressions are given in Sec. 19 [see (19.3)].

The displacements are determined by the formulas [see (18.19)]

$$\left.\begin{aligned} u &= -\frac{M_t}{4I_2}\, a_{31}z^2 - \vartheta yz + U(x,\ y) + u', \\ v &= \frac{M_t}{4I_1}\, a_{35}z^2 + \vartheta xz + V(x,\ y) + v', \\ w &= \frac{M_t}{2}\left(\frac{a_{34}}{I_2}\, x - \frac{a_{35}}{I_1}\, y\right) z + W(x,\ y) + w'. \end{aligned}\right\} \tag{49.10}$$

Here u', v', w' are rigid-body displacements containing six constants and determined by formulas (18.8).

The stress components may be expressed in terms of three functions $\Phi_k(z_k)$ of the complex variables $z_k = x + \mu_k y$ (complex potentials):

$$\left.\begin{aligned} \sigma_x &= 2\,\mathrm{Re}\,[\mu_1^2\Phi_1'(z_1) + \mu_2^2\Phi_2'(z_2) + \mu_3^2\lambda_3\Phi_3'(z_3)], \\ \sigma_y &= 2\,\mathrm{Re}\,[\Phi_1' + \Phi_2' + \lambda_3\Phi_3'], \\ \tau_{xy} &= -2\,\mathrm{Re}\,[\mu_1\Phi_1' + \mu_2\Phi_2' + \mu_3\lambda_3\Phi_3'], \\ \tau_{xz} &= 2\,\mathrm{Re}\,[\mu_1\lambda_1\Phi_1' + \mu_2\lambda_2\Phi_2' + \mu_3\Phi_3'], \\ \tau_{yz} &= -2\,\mathrm{Re}[\lambda_1\Phi_1' + \lambda_2\Phi_2' + \Phi_3']. \end{aligned}\right\} \tag{49.11}$$

The boundary conditions for Φ_k are of the form

$$\left.\begin{aligned} 2\,\mathrm{Re}\,[\Phi_1 + \Phi_2 + \lambda_3\Phi_3] &= c_1, \\ 2\,\mathrm{Re}\,[\mu_1\Phi_1 + \mu_2\Phi_2 + \mu_3\lambda_3\Phi_3] &= c_2, \\ 2\,\mathrm{Re}\,[\lambda_1\Phi_1 + \lambda_2\Phi_2 + \Phi_3] &= c_3 - \psi_0. \end{aligned}\right\} \tag{49.12}$$

Here ψ_0 is a particular solution of the non-homogeneous system (49.9). Since this part is constant, it follows that ψ_0 may be taken in a very simple form, for example, in the form of a second-degree polynomial in x and y:

$$\psi_0 = \left[-\frac{\vartheta}{2} + \frac{M_t}{8a_{33}}\left(\frac{a_{34}^2}{I_2} + \frac{a_{35}^2}{I_1}\right)\right] \frac{\beta_{55}x^2 + 2\beta_{45}xy + \beta_{44}y^2}{\beta_{44}\beta_{55} - \beta_{45}^2}. \tag{49.13}$$

The functions F, ψ, and Φ_k are determined to within the factor

$$\vartheta - \frac{M_t}{4a_{33}}\left(\frac{a_{34}^2}{I_2} + \frac{a_{35}^2}{I_1}\right). \tag{49.14}$$

In particular,

$$\psi = \left[\vartheta - \frac{M_t}{4a_{33}} \left(\frac{a_{34}^2}{I_2} + \frac{a_{35}^2}{I_1} \right) \right] \bar{\psi}(x, y). \tag{49.15}$$

The unknown constant ϑ is found from the equation

$$2 \int\int \psi \, dx \, dy = M_t. \tag{49.16}$$

We introduce into consideration a new quantity $\bar{C}$, which is defined as the torsional rigidity of an isotropic bar:

$$\bar{C} = 2 \int\int \bar{\psi} \, dx \, dy. \tag{49.17}$$

From Eq. (49.16) we then obtain

$$\vartheta = M_t \left[\frac{1}{\bar{C}} + \frac{1}{4a_{33}} \left(\frac{a_{34}^2}{I_2} + \frac{a_{35}^2}{I_1} \right) \right] = \frac{M_t}{C_t}. \tag{49.18}$$

It follows that

$$C_t = \frac{\bar{C}}{1 + \frac{\bar{C}}{4a_{33}} \left(\frac{a_{34}^2}{I_2} + \frac{a_{35}^2}{I_1} \right)} = \frac{\bar{C}}{1 + \frac{\bar{C}}{4E_z} \left(\frac{\eta_{yz,z}^2}{I_2} + \frac{\eta_{zx,x}^2}{I_1} \right)}. \tag{49.19}$$

In the last formula the strain coefficients are expressed in terms of coefficients η. The quantity C_t will be termed the generalized torsional rigidity. It is obvious that $C^t \leqslant \bar{C}$.

The expressions for the components of displacement (49.10) show that in generalized torsion the axis of a bar does not remain straight but becomes curved under the action of twisting moments. If the original length of the bar is denoted by l and the end $z = l$ is taken to be fixed, the projections of the deflected axis on the planes xz and yz are given by the formulas

$$\left. \begin{aligned} x' &= -\frac{M_t}{4I_2} a_{34} (l - z)^2, \\ y' &= \frac{M_t}{4I_1} a_{35} (l - z)^2. \end{aligned} \right\} \tag{49.20}$$

The displacements of the centre of the free section are expressed by the formulas

$$\left.\begin{aligned} f_x &= -\frac{M_t l^2}{4I_2} a_{34} = -\frac{M_t l^2}{4I_2} \frac{\eta_{yz,z}}{E_z}, \\ f_y &= \frac{M_t l^2}{4I_1} a_{35} = \frac{M_t l^2}{4I_1} \frac{\eta_{zx,x}}{E_z}. \end{aligned}\right\} \qquad (49.21)$$

50. Combined Action of Twisting and Bending Moments

Consider some cases of the equilibrium of a bar whose ends are acted on by both twisting M_t and bending moments M_1 and M_2 (in the principal planes). Let the coordinate axes be taken as in Fig. 81, with the x and y axes directed along the principal axes of inertia of one of the ends [26]. If the material of the body is isotropic and the deformations are small, the actions of the twisting and bending moments may be considered independently: the twisting moments produce torsion and the bending moments, bending in the principal planes.

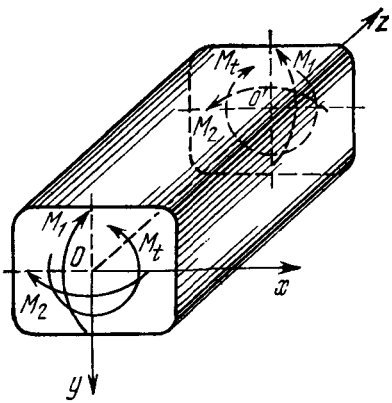

Fig. 81

This is not so in an anisotropic bar having general anisotropy: the twisting moments produce torsion and bending and the bending moments, bending accompanied by twisting. In the case when the lateral surface is not loaded or fixed we have, in a homogeneous bar with rectilinear anisotropy.

$$\left.\begin{aligned} &X_n = Y_n = X = Y = \bar{U} = 0, \\ &A = \frac{a_{34}}{2a_{33}} \frac{M_t}{I_2} + \frac{M_2}{I_2}, \\ &B = -\frac{a_{35}}{2a_{33}} \frac{M_t}{I_1} + \frac{M_1}{I_1}, \quad C = 0; \end{aligned}\right\} \qquad (50.1)$$

$$\sigma_z = \left(M_t \frac{a_{34}}{2a_{33}} + M_2\right) \frac{x}{I_2} + \left(-M_t \frac{a_{35}}{2a_{33}} + M_1\right) \frac{y}{I_1} -$$
$$- \frac{1}{a_{33}} (a_{13}\sigma_x + a_{23}\sigma_y + a_{34}\tau_{yz} + a_{35}\tau_{xz} + a_{36}\tau_{xy}). \qquad (50.2)$$

The other five components of stress are determined by formulas (49.2). The stress functions satisfy Eqs. (19.2), where we must substitute the values of the constants A, B, C, and $\bar{U} = 0$.

After determining the stress components, we find the displacements, in which the constants ω_i, u_0, v_0, w_0 are determined from the fixing conditions. In particular, if an element of the axis passing through the centre of the section $z = l$ is rigidly fixed, we obtain the following expressions for the displacements:

$$\left.\begin{aligned}
u &= -\frac{1}{2I_2}(M_2 a_{33} + 0.5 M_t a_{34})(l-z)^2 + \\
&\quad + \vartheta (l-z) y + U - (U)_0 + 0.5\left(\frac{\partial V}{\partial x} - \frac{\partial U}{\partial y}\right)_0 y, \\
v &= -\frac{1}{2I_1}(M_1 a_{33} - 0.5 M_t a_{35})(l-z)^2 - \\
&\quad - \vartheta (l-z) x + V - (V)_0 - 0.5\left(\frac{\partial V}{\partial x} - \frac{\partial U}{\partial y}\right)_0 x, \\
w &= -\frac{1}{I_1}(M_1 a_{33} - 0.5 M_t a_{35})(l-z) y - \\
&\quad - \frac{1}{I_2}(M_2 a_{33} + 0.5 M_t a_{34})(l-z) x + W - (W)_0.
\end{aligned}\right\} \qquad (50.3)$$

The functions U, V, W satisfy the system of equations (18.12), (18.15); the quantities marked by zeros are the values of functions of the variables x, y for $x = y = 0$. The resulting expression for the function ψ is

$$\psi = \left[\vartheta - \frac{M_t}{4a_{33}}\left(\frac{a_{34}^2}{I_2} + \frac{a_{35}^2}{I_1}\right) + \frac{M_1}{2I_1} a_{35} - \frac{M_2}{2I_2} a_{34}\right] \bar{\psi}(x, y), \qquad (50.4)$$

where $\bar{\psi}$ is the same function as in the case of generalized torsion, a function depending on the shape and dimensions of

the cross section and the elastic constants. The angle of twist per unit length is determined from Eq. (49.16) as

$$\vartheta = \frac{M_t}{C_t} - \frac{M_1}{2I_1} a_{35} + \frac{M_2}{2I_2} a_{34}. \tag{50.5}$$

The projections of the deflected axis on the planes xz and yz are

$$\left.\begin{aligned} x' &= -\frac{1}{2I_2}(M_2 a_{33} + 0.5 M_t a_{34})(l-z)^2, \\ y' &= -\frac{1}{2I_1}(M_1 a_{33} - 0.5 M_t a_{35})(l-z)^2. \end{aligned}\right\} \tag{50.6}$$

These formulas show that if M_1, M_2, M_t are arbitrary the bar is bent and twisted. The moments may, however, be chosen so that there will be no bending or else no twisting.

(1) *Torsion without bending.* We choose the moments as follows:

$$M_1 = M_t \frac{a_{35}}{2a_{33}}, \qquad M_2 = -M_t \frac{a_{34}}{2a_{33}}. \tag{50.7}$$

Then $x' = 0$, $y' = 0$, i.e., the axis of the bar remains straight, and only torsion takes place. The angle of twist per unit length is

$$\vartheta = \frac{M_t}{\overline{C}} \tag{50.8}$$

The torsional rigidity $\overline{C}$ is obviously greater than the generalized torsional rigidity.

(2) *Bending without twisting.* If the moments are suitably chosen, the bar is bent in one of the principal planes (for example, in the yz plane) and the bending is not accompanied by twisting. By setting $x' = 0$ and $\vartheta = 0$, and solving the resulting equations for M_2 and M_t, we find

$$\left.\begin{aligned} M_2 &= -M_1 \frac{a_{34}a_{35}}{4a_{33}} \frac{\overline{C}}{I_1} \frac{1}{1 + \frac{a_{35}^2}{4a_{33}} \frac{\overline{C}}{I_1}}, \\ M_t &= M_1 \frac{a_{35}}{2} \frac{\overline{C}}{I_1} \frac{1}{1 + \frac{a_{35}^2}{4a_{23}} \frac{\overline{C}}{I_1}}. \end{aligned}\right\} \tag{50.9}$$

The equation of the deflected axis (in the yz plane) is of the form

$$y' = -\frac{M_1 a_{33}}{2I_1} \frac{(l-z)^2}{1+\frac{a_{35}^2}{4a_{33}} \frac{\overline{C}}{I_1}}. \tag{50.10}$$

For the bar bent only by a moment M_1, the equation of the deflected axis is $\overline{y}' = f(z)$, or, when written out in full,

$$\overline{y}' = -\frac{M_1 a_{33}}{2I_1} (l-z)^2. \tag{50.11}$$

Comparison of these two equations shows that if the bar is acted on by moments M_2 and M_t preventing its twisting, its flexural rigidity is increased, namely it is not equal to $\overline{B} = I_1/a_{33} = E_z I_1$, but is determined by the formula

$$B = \overline{B} + 0.25 \left(\frac{a_{35}}{a_{33}}\right)^2 \overline{C} = \overline{B} + 0.25\eta_{zx,\,z}^2 \overline{C}. \tag{50.12}$$

In this case the state of stress is complex: the stress components are determined with the help of the functions F, ψ or $\Phi_k(z_k)$ and are in general all different from zero.

51. Simple or Pure Torsion of a Homogeneous Bar

Suppose that a homogeneous bar such as is shown in Fig. 80 has rectilinear anisotropy of a special kind: at each point there is a plane of elastic symmetry normal to the generators (i.e., coincident with the plane of the cross section), the forces being distributed over the ends and reducing at either of them to a twisting moment M_t. In this case the whole theory is greatly simplified. Instead of system (49.9) we have only one equation for the function ψ since the function F, taking into account Eqs. (49.9) and the boundary and end conditions, may be set equal to zero. In addition, $A = B = C = 0$,

$$\left.\begin{aligned} U = V = 0, \quad a_{34} = a_{35} = 0, \\ \beta_{44} = a_{44}, \quad \beta_{45} = a_{45}, \quad \beta_{55} = a_{55}. \end{aligned}\right\} \tag{51.1}$$

Four stress components out of six are zero:

$$\sigma_x = \sigma_y = \tau_{xy} = \sigma_z = 0, \tag{51.2}$$

and the others are related to the function ψ as follows:

$$\tau_{xz} = \frac{\partial \psi}{\partial y}, \quad \tau_{yz} = -\frac{\partial \psi}{\partial x}. \tag{51.3}$$

The function ψ satisfies a second-order equation, which is written out in full (without abbreviations) as

$$a_{44} \frac{\partial^2 \psi}{\partial x^2} - 2a_{45} \frac{\partial^2 \psi}{\partial x \, \partial y} + a_{55} \frac{\partial^2 \psi}{\partial y^2} = -2\vartheta \tag{51.4}$$

On the contour of the cross section

$$\psi = c_3, \tag{51.5}$$

in the case of a simply connected region of the section we may set $c_3 = 0$.

The function ψ and the stresses are determined to within a factor ϑ:

$$\psi = \vartheta \bar{\psi} (x, y). \tag{51.6}$$

The unknown angle of twist per unit length (twist) is found from the end conditions, or, what is the same thing, from the conditions of equilibrium in the plane of the cross section, i.e., from the equation

$$2 \int\int \psi \, dx \, dy = M, \tag{51.7}$$

from which

$$\vartheta = \frac{M}{C}. \tag{51.8}$$

Here C is the rigidity in simple or pure torsion:

$$C = 2 \int\int \bar{\psi} \, dx \, dy. \tag{51.9}$$

The total angle of twist of a bar of length l is $\vartheta l = Ml/C$.

Instead of W we introduce a new function $\varphi (x, y)$ by setting

$$W = \vartheta \varphi. \tag{51.10}$$

This function, which characterizes the warping of the plane of the cross section, is called the torsion function or the displacement function in distinction to ψ, which is called the stress function in torsion.*

The function φ satisfies the equations

$$\left.\begin{aligned} \vartheta\left(\frac{\partial\varphi}{\partial x}-y\right)&=a_{45}\tau_{yz}+a_{55}\tau_{xz},\\ \vartheta\left(\frac{\partial\varphi}{\partial y}+x\right)&=a_{44}\tau_{yz}+a_{45}\tau_{xz}.\end{aligned}\right\} \tag{51.11}$$

Finally, the projections of displacement are of the form

$$u=-\vartheta yz+u',\quad v=\vartheta xz+v',\qquad w=\vartheta\varphi(x,\ y)+w, \tag{51.12}$$

which follows directly from (49.10) and values (51.1).

We may mention two basic methods of solving torsion problems. In the first method the unknown function is taken to be the stress function in torsion. This function satisfies Eq. (51.4) and assumes a constant value (zero in particular) on the contour of the cross section.

In the second method the unknown function is taken to be the torsion function φ. On expressing the stresses in terms of this function, we obtain

$$\left.\begin{aligned}\tau_{xz}&=\vartheta\left[A_{45}\left(\frac{\partial\varphi}{\partial y}+x\right)+A_{55}\left(\frac{\partial\varphi}{\partial x}-y\right)\right],\\ \tau_{yz}&=\vartheta\left[A_{44}\left(\frac{\partial\varphi}{\partial y}+x\right)+A_{45}\left(\frac{\partial\varphi}{\partial x}-y\right)\right].\end{aligned}\right\} \tag{51.13}$$

Here

$$\left.\begin{aligned}A_{44}=\frac{a_{55}}{\Delta},\quad A_{45}=-\frac{a_{45}}{\Delta},\quad A_{55}=\frac{a_{44}}{\Delta},\\ \Delta=a_{44}a_{55}-a_{45}^2.\end{aligned}\right\} \tag{51.14}$$

By requiring that the stresses should satisfy the single equilibrium equation for a continuous medium

$$\frac{\partial\tau_{xz}}{\partial x}+\frac{\partial\tau_{yz}}{\partial y}=0, \tag{51.15}$$

* See, for example, [29], p. 312 and [4], pp. 36-38.

we obtain an equation that is satisfied by φ:

$$A_{55}\frac{\partial^2\varphi}{\partial x^2}+2A_{45}\frac{\partial^2\varphi}{\partial x\,\partial y}+A_{44}\frac{\partial^2\varphi}{\partial y^2}=0, \tag{51.16}$$

or

$$a_{44}\frac{\partial^2\varphi}{\partial x^2}-2a_{45}\frac{\partial^2\varphi}{\partial x\,\partial y}+a_{55}\frac{\partial^2\varphi}{\partial y^2}=0. \tag{51.17}$$

The boundary condition is obtained from the equality

$$\tau_{xz}\cos(n,\ x)+\tau_{yz}\cos(n,\ y)=0. \tag{51.18}$$

The boundary condition for the function φ is more complicated than that for ψ, and hence the second method is not so convenient for the solution of specific problems as the first one. In all cases we shall prefer the first method.

52. Relationship Between Stresses or Displacements and a Function of a Complicated Complex Variable

The stress function, satisfying Eq. (51.4), and both the stresses and displacements may be expressed in terms of a single function of the complicated complex variable z_3, i.e., the complex potential. Indeed, by seeking the solution of the homogeneous equation (51.4) (with $\vartheta=0$) in the form

$$\psi=f(x+\mu y), \tag{52.1}$$

we conclude that the factor μ must satisfy the equation

$$a_{55}\mu^2-2a_{45}\mu+a_{44}=0. \tag{52.2}$$

Theorem 2 proved in Chap. 3, Sec. 20 shows that the roots of Eq. (52.2) for all coefficients β_{ij} are pure imaginary or complex (unless β_{44} or β_{55} is zero). In exactly the same way, by replacing β_{ij} by a_{ij}, we prové the absence of real roots for Eq. (52.2) (if, of course, one or both of the extreme coefficients, a_{44} and a_{55}, are not zero; otherwise the roots of the equation are real).

Thus, in all cases except for the special ones mentioned above we have

$$\psi=2\,\mathrm{Re}\,[\Phi_3(z_3)]+\psi_0, \tag{52.3}$$

where

$$z_3 = x + \mu_3 y, \tag{52.4}$$

$\mu_3 = \alpha_3 + i\beta_3$, $\bar{\mu}_3 = \alpha_3 - i\beta_3$ $(\beta_3 > 0)$ are the torsional complex parameter and its conjugate (cf. Sec. 49) and ψ_0 is a particular solution of the non-homogeneous equation (51.4). The stress components and displacement are expressed in terms of the function $\Phi_3(z_3)$ as follows:

$$\left.\begin{aligned} \tau_{xz} &= 2\,\mathrm{Re}\,[\mu_3 \Phi_3'(z_3)] + \frac{\partial \psi_0}{\partial y}, \\ \tau_{yz} &= -2\,\mathrm{Re}\,[\Phi_3'] - \frac{\partial \psi_0}{\partial x}; \end{aligned}\right\} \tag{52.5}$$

$$\varphi = \frac{2}{\vartheta}\,\mathrm{Re}\left[\left(a_{45} - \frac{a_{44}}{\mu_3}\right)\Phi_3(z_3)\right]. \tag{52.6}$$

The boundary condition for the complex potential is of the form

$$2\,\mathrm{Re}\,[\Phi_3] = c_3 - \psi_0. \tag{52.7}$$

The problem of the torsion of an anisotropic bar with a region of the section S is reduced to that for an isotropic bar in which the region of the cross section S_3 is obtained from the given one by the affine transformation

$$z_3 = x_3 + iy_3, \quad x_3 = x + \alpha_3 y, \quad y_3 = \beta_3 y. \tag{52.8}$$

Figure 25 shows how S_3 can be obtained from S for the case of the plane problem, where one has to deal with two transformed regions, S_1, S_2 (and in the case of generalized plane strain and torsion even with three, S_1, S_2, S_3).

By solving Eqs. (52.8) for x, y, we obtain

$$x = x_3 - \frac{\alpha_3}{\beta_3} y_3, \quad y = \frac{1}{\beta_3} y_3. \tag{52.9}$$

If the contour S of the section of an anisotropic bar is given by the equation $f(x, y) = 0$, the problem is reduced to that of the torsion of an isotropic bar the contour of whose section is given by the equation

$$f\left(x_3 - \frac{\alpha_3}{\beta_3} y_3, \quad \frac{1}{\beta_3} y_3\right) = 0. \tag{52.10}$$

We shall briefly discuss the case of an orthotropic bar. By taking the x and y axes normal to the planes of elastic symmetry, we write the generalized Hooke's law equations as

$$\gamma_{yz}=\frac{1}{G_1}\tau_{yz}, \qquad \gamma_{xz}=\frac{1}{G_2}\tau_{xz} \tag{52.11}$$

(G_1, G_2 are the shear moduli for the yz and xz planes; $G_1 = 1/a_{44}$, $G_2 = 1/a_{55}$, $a_{45} = 0$). Substituting the values of the coefficients a_{ij} in Eq. (51.4), and introducing the notation

$$g=\frac{a_{44}}{a_{55}}=\frac{G_2}{G_1}, \tag{52.12}$$

we obtain, instead of (51.4)

$$g\frac{\partial^2\psi}{\partial x^2}+\frac{\partial^2\psi}{\partial y^2}=-2\vartheta G_2. \tag{52.13}$$

The problem of the torsion of an orthotropic bar can easily be reduced to that for an isotropic bar in several ways by a change of the variables in (52.13). One such change is

$$x=x_3\sqrt{\frac{2g}{1+g}}, \quad y=y_3\sqrt{\frac{2}{1+g}}. \tag{52.14}$$

Other changes are indicated by Saint-Venant [110], Leibenzon [23, 25], Lokshin [96], and Love [29].

53. Elastic Equilibrium of a Bar of Elliptical Section under Twisting and Bending Moments

Consider the elastic equilibrium of a cylinder of elliptical section having general rectilinear anisotropy (21 or 18 elastic constants) one of whose ends is fixed and the other is acted on by forces reducing to a twisting moment and bending moments in planes passing through the geometrical axis and the principal axes of the ellipse. Let the origin of co-ordinates be placed at the centre of the free section, with the z axis directed along the geometrical axis and the x and y axes

along the principal axes of the ellipse (Fig. 82). We introduce the notation: l = length of the bar, a, b = lengths of the principal semiaxes of the ellipse, M_t = twisting moment, M_1, M_2 = bending moments in the principal planes yz, xz. The solution to the problem of the torsion of an orthotropic bar was found by Saint-Venant [110]. A more general problem of a non-orthotropic homogeneous bar that is twisted and, in addition, bent by moments was solved by Voigt [38]. We shall discuss the basic cases of equilibrium considered by Voigt for several combinations of moments.

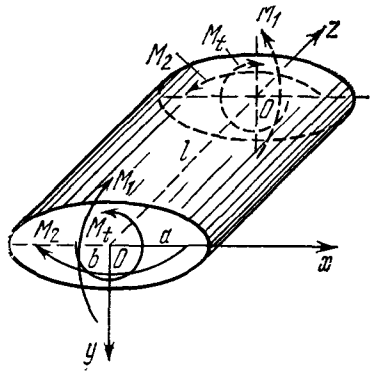

Fig. 82

(1) *Generalized torsion.* Suppose that there are only twisting moments M_t, and bending moments are absent ($M_1 = M_2 = 0$). Two stress functions satisfy three very simple boundary conditions:

$$\frac{\partial F}{\partial x} = \frac{\partial F}{\partial y} = \psi = 0. \tag{53.1}$$

The solution is also very simple:

$$\left.\begin{aligned} &F = 0, \\ &\psi = \frac{\vartheta - \dfrac{M_t}{4a_{33}}\left(\dfrac{a_{34}^2}{I_2} + \dfrac{a_{35}^2}{I_1}\right)}{\dfrac{\beta_{44}}{a^2} + \dfrac{\beta_{55}}{b^2}}\left(1 - \frac{x^2}{a^2} - \frac{y^2}{b^2}\right). \end{aligned}\right\} \tag{53.2}$$

In this case

$$\left.\begin{aligned} &I_1 = \frac{\pi a b^3}{4}, \qquad I_2 = \frac{\pi a^3 b}{4}, \\ &\overline{C} = \frac{\pi a^3 b^3}{\beta_{44} b^2 + \beta_{55} a^2}. \end{aligned}\right\} \tag{53.3}$$

The generalized torsional rigidity is found by the formula

$$C_t = \frac{\pi a^3 b^3}{a_{44} b^2 + a_{55} a^2}. \tag{53.4}$$

The stress function and the stresses expressed in terms of the moment M_t are represented as

$$\psi = \frac{M_t}{\pi ab}\left(1 - \frac{x^2}{a^2} - \frac{y^2}{b^2}\right); \tag{53.5}$$

$$\left.\begin{aligned} &\sigma_x = \sigma_y = \tau_{xy} = \sigma_z = 0, \\ &\tau_{xz} = -\frac{2M_t}{\pi ab^3}\, y, \quad \tau_{yz} = \frac{2M_t}{\pi a^3 b}\, x. \end{aligned}\right\} \tag{53.6}$$

Formulas (53.6) show that when the moment is given the stress distribution is independent of the elastic constants and coincides with that in a similar isotropic body. The general nature of the state of stress is also the same as in an isotropic body (four stress components out of six are zero). The rigidity C_t is the same as in the torsion of an orthotropic body in which the principal shear moduli are $1/a_{44}$ and $1/a_{55}$.

The displacements satisfying the required conditions at the fixed end $z = l$ are determined by the formulas

$$\left.\begin{aligned} u &= \frac{M_t}{\pi a^3 b^3}\,[-a_{34} b^2 (l-z)^2 + (a_{44} b^2 + a_{55} a^2)(l-z)\, y + \\ &\qquad + a_{14} b^2 x^2 - 2a_{15} a^2 xy - (a_{24} b^2 + a_{56} a^2)\, y^2], \\ v &= \frac{M_t}{\pi a^3 b^3}\,[a_{35} a^2 (l-z)^2 - (a_{44} b^2 + a_{55} a^2)(l-z)\, x + \\ &\qquad + (a_{46} b^2 + a_{15} a^2)\, x^2 + 2a_{24} b^2 xy - a_{25} a^2 y^2], \\ w &= \frac{M_t}{\pi a^3 b^3}\,[2(a_{35} a^2 y - a_{34} b^2 x)(l-z) + \\ &\qquad + a_{45}(b^2 x^2 - a^2 y^2) + (a_{44} b^2 - a_{55} a^2)\, xy]. \end{aligned}\right\} \tag{53.7}$$

The axis of the bar is bent under the moment M_t and assumes the shape of a curve:

$$x' = -\frac{M_t}{\pi a^3 b}\, a_{34} (l-z)^2, \qquad y' = \frac{M_t}{\pi a b^3}\, a_{35} (l-z)^2. \tag{53.8}$$

If there are planes of elastic symmetry normal to the axis, the axis remains straight; displacements (53.7) are also greatly simplified.

(2) *Torsion not accompanied by bending.* The axis of a bar remains straight even in the case when the anisotropy is general if to the twisting moment are added bending moments chosen as follows:

$$\left.\begin{aligned} M_1 &= 0.5M_t\frac{a_{35}}{a_{33}} = 0.5M_t\eta_{zx,\,z}, \\ M_2 &= -0.5M_t\frac{a_{34}}{a_{33}} = -0.5M_t\eta_{yz,\,z}. \end{aligned}\right\} \tag{53.9}$$

In this case the generalized torsional rigidity is equal to $\overline{C}$, i.e.,

$$C_t = \overline{C} = \frac{\pi a^3 b^3}{\beta_{44}b^2 + \beta_{55}a^2}. \tag{53.10}$$

The shearing stresses τ_{xz}, τ_{yz} are determined by formulas (53.6), σ_x, σ_y, τ_{xy} are zero, and there are normal as well as shearing stresses acting at cross sections:

$$\sigma_z = \frac{4M_t}{\pi a^3 b^3}\frac{1}{a_{33}}(-a_{34}b^2x + a_{35}a^2y) = \\ = \frac{4M_t}{\pi a^3 b^3}(-\eta_{yz,\,z}b^2x + \eta_{zx,\,z}a^2y). \tag{53.11}$$

(3) *Bending in a principal plane not accompanied by twisting.* If the twisting and bending moments applied at the ends are to produce only bending in the yz plane without twisting, they must be chosen so as to be related by (50.9). Relations (50.9) for a bar of elliptical section take the form

$$\left.\begin{aligned} M_2 &= -M_1\frac{a_{34}a_{35}}{a_{33}}\frac{1}{a_{55}+\beta_{44}\left(\frac{b}{a}\right)^2}, \\ M_t &= M_1 2a_{35}\frac{1}{a_{55}+\beta_{44}\left(\frac{b}{a}\right)^2}. \end{aligned}\right\} \tag{53.12}$$

The equation of the deflected axis (on the yz plane) is

$$y' = -\frac{M_1}{2B}(l-z)^2, \tag{53.13}$$

where B is the flexural rigidity:

$$B = \frac{\pi ab^3}{4a_{33}}\left[1 + \frac{a_{35}^2}{a_{33}} \frac{1}{\beta_{44}\left(\frac{b}{a}\right)^2 + \beta_{55}}\right]. \qquad (53.14)$$

Obviously, $\overline{B} > \overline{B}$, where $\overline{B} = \pi ab^3/4a_{33}$ is the rigidity in bending produced only by bending moments M_1. The shearing stresses in this case are determined by formulas (53.6). There are normal stresses at cross sections equal to

$$\sigma_z = \frac{4}{\pi ab}\left(\frac{M_1}{b^2}\, y + \frac{M_2}{a^2}\, x\right). \qquad (53.15)$$

All formulas of this section also hold for a bar of circular section. In this case we must set $b = a$ throughout.

54. Pure Torsion of a Homogeneous Orthotropic Bar of Elliptical or Circular Section

Consider an orthotropic bar of elliptical section in which one of the planes of elastic symmetry is normal to the z axis or the generators, and the other two are parallel to the axis. These two planes do not necessarily intersect the plane of the section at a given point along lines parallel to the principal axes of the ellipse; the line of intersection of one of these two planes of elastic symmetry forms an angle α other than 0° or 90° with the principal axis $2a$ of the ellipse (Fig. 83).

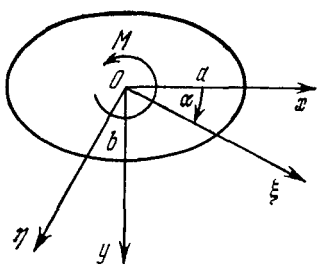

Fig. 83

Let the strain coefficients for the directions of the principal axes of the ellipse x, y be denoted by a_{44}, a_{45}, a_{55}, and the lengths of the principal semiaxes of the ellipse by a, b. In considering simple or pure torsion, we shall denote the twisting moment and the torsional rigidity by M and C, respectively (without the subscript t). In the present case the formulas for the stress functions, torsional rigidity, stresses, and displacements are developed in an elementary

way based on Secs. 51, 53, and the resulting expressions are the same as in the case of combined bending and twisting moments (for $M_1 = M_2 = 0$):

$$C = \frac{\pi a^3 b^3}{a_{44} b^2 + a_{55} a^2}, \tag{54.1}$$

$$\left.\begin{aligned} &\sigma_x = \sigma_y = \sigma_z = \tau_{xy} = 0, \\ &\tau_{xz} = -\frac{2M}{\pi a b^3} y, \quad \tau_{yz} = \frac{2M}{\pi a^3 b} x. \end{aligned}\right\} \tag{54.2}$$

The stress components are independent of the elastic constants. The rigidity is a function of a_{ij} and the angle α, which the principal direction of elasticity makes with the direction of the principal axis $2a$ of the ellipse (Fig. 83).

Let the shear moduli for the principal directions of elasticity ξ, η be denoted by G_1, G_2, respectively, and the ratios of the principal moduli and of the axes of the ellipse by g and c, respectively ($g = G_2/G_1$, $c = a/b \geqslant 1$). The expressions for a_{ij} and the rigidity are written as

$$\left.\begin{aligned} a_{44} &= \frac{\cos^2\alpha}{G_1} + \frac{\sin^2\alpha}{G_2}, \\ a_{55} &= \frac{\sin^2\alpha}{G_1} + \frac{\cos^2\alpha}{G_2}; \end{aligned}\right\} \tag{54.3}$$

$$C = \frac{2\pi a^3 b}{(1+g)(1+c^2) + (g-1)(1-c^2)\cos 2\alpha}. \tag{54.4}$$

The rigidity is maximum if the plane of elastic symmetry with the maximum shear modulus passes through the major axis $2a$ of the section ($\alpha = \pm 90°$), and it is minimum if this plane passes through the minor axis of the ellipse ($\alpha = 0°$ and $\alpha = 180°$). These maximum and minimum rigidities are (see [35], pp. 57-59)

$$C_{\max} = G_2 \frac{\pi a^3 b}{1 + g c^2}, \qquad C_{\min} = G_2 \frac{\pi a^3 b}{g + c^2}. \tag{54.5}$$

Table 19 gives numerical values of the ratio $C(\alpha)/C_{\min}$ for several α, two values of the ratio of the principal shear moduli, $g = 0.5$ and $g = 0.1$, and five values of the ratio of the principal axes of the ellipse, $c = 1.5, 2, 3, 4, 5$.

It is seen from the table that for $g = 0.5$ the ratio of the rigidities is not great (not greater than two), but if the

The Ratio $C(\alpha)/C_{\min}$ for an Elliptical Section **Table 19**

$\alpha°$	$g = 0.5$					$g = 0.1$				
	c					c				
	1.5	2	3	4	5	1.5	2	3	4	5
0	1	1	1	1	1	1	1	1	1	1
15	1.015	1.023	1.029	1.031	1.033	1.033	1.046	1.056	1.059	1.060
30	1.060	1.091	1.118	1.128	1.133	1.136	1.197	1.246	1.265	1.274
45	1.128	1.200	1.267	1.294	1.308	1.315	1.491	1.655	1.722	1.755
60	1.205	1.333	1.462	1.517	1.545	1.560	1.976	2.460	2.695	2.823
75	1.269	1.451	1.647	1.737	1.783	1.807	2.533	3.821	4.594	5.087
90	1.294	1.500	1.727	1.833	1.889	1.918	2.929	4.791	6.192	7.200

difference between the shear moduli is large, i.e., if g is small, the difference between the maximum and minimum rigidities becomes significant, particularly for prolate ellipses.

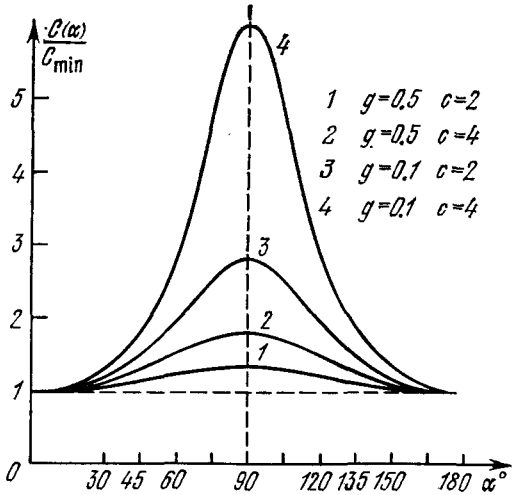

Fig. 84

Figure 84 shows the variation of the ratio $C(\alpha)/C_{\min}$ with the angle α for two values of g and two values of c.

Below is given the value of the torsion function for a bar of elliptical section characterizing the warping of the plane of the section in torsion (the bar is orthotropic, the planes of elastic symmetry are parallel to planes passing through the z axis and the principal axes of the ellipse [28]):

$$\varphi = \frac{M}{\pi a^3 b}(a_{44} - a_{55}c^2)\,xy. \tag{54.6}$$

55. Torsion of a Homogeneous Orthotropic Bar of Rectangular Section

Consider a bar of rectangular section of sides a, b and length l, homogeneous, rectilinearly orthotropic (equivalent directions are parallel to the directions of the axes), with the principal shear moduli G_1 and G_2. At each point there are three orthogonal planes of elastic symmetry parallel to the faces of the parallelepiped. One end is fixed, the other is acted on by forces reducing to a twisting moment M; no other forces are applied externally, and body forces are absent.

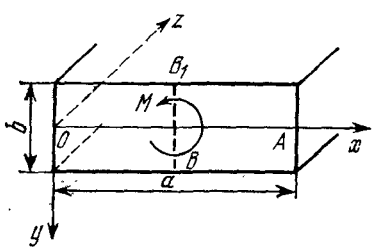

Fig. 85

In the present case it is more convenient to take the origin of co-ordinates at the middle of the shorter side of the free end cross section if the sides are not of the same length (if the section is square, at the middle of one of the four sides), with the y axis directed along the shorter side, and the x axis parallel to the longer one; hence, the z axis is parallel to the edges from the free to the fixed end (Fig. 85).

The stress function ψ must vanish on all four sides of the cross section, $x = 0$, $x = a$, $y = \pm b/2$. We seek the solution, i.e., the function ψ in the form of a single series by requiring that this function should vanish beforehand on two opposite sides of the section; the unknown constants are determined from the conditions on the other two sides,

just as the torsion problem is solved for an isotropic bar of rectangular section ([26] or [28]).

On expanding the right-hand side of Eq. (52.13) in a Fourier sine series, we rewrite it as follows:

$$g\frac{\partial^2\psi}{\partial x^2}+\frac{\partial^2\psi}{\partial y^2}=-\frac{8\vartheta G_2}{\pi}\sum_{m=1,3,5,\ldots}^{\infty}\frac{1}{m}\sin\frac{m\pi x}{a}. \qquad (55.1)$$

Here

$$g=G_2/G_1. \qquad (55.2)$$

The solution of this equation is sought in the form of a series satisfying beforehand the conditions on the sides $x=0$ and $x=a$:

$$\psi=\sum_{m=1,3,5,\ldots}^{\infty}Y_m(y)\sin\frac{m\pi x}{a}. \qquad (55.3)$$

Substituting ψ on the left-hand side of (55.1), and comparing the coefficients of the sines of like arguments on the left-hand and right-hand sides, we obtain an ordinary equation for Y_m:

$$Y_m''-\left(\frac{m\pi\mu}{a}\right)^2Y_m=-\frac{8\vartheta G_2}{\pi m} \qquad (\mu=\sqrt{g}). \qquad (55.4)$$

The general integral of this equation is

$$Y_m=A_m\cosh\frac{m\pi\mu}{a}y+B_m\sinh\frac{m\pi\mu}{a}y+\frac{8\vartheta G_1a^2}{\pi^3m^3}. \qquad (55.5)$$

On determining the constants A_m and B_m from the conditions on the sides $y=\pm b/2$, the final expression for the stress function is obtained as

$$\psi=\frac{8\vartheta G_1a^2}{\pi^3}\sum_{m=1,3,5,\ldots}^{\infty}\frac{1}{m^3}\left(1-\frac{\cosh\frac{m\pi\mu}{a}y}{\cosh\frac{m\pi\mu}{2c}}\right)\times$$
$$\times\sin\frac{m\pi x}{a} \qquad (c=a/b). \qquad (55.6)$$

The stress components are found by formulas (51.3) in the form of series:

$$\left.\begin{aligned}
\tau_{xz} &= -\frac{8\vartheta G_1 \mu a}{\pi^2} \sum_{m=1,3,5,\ldots} \frac{1}{m^2} \frac{\sinh \frac{m\pi\mu}{a} y}{\cosh \frac{m\pi\mu}{2c}} \times \\
&\qquad \times \sin \frac{m\pi x}{a}, \\
\tau_{yz} &= -\frac{8\vartheta G_1 a}{\pi^2} \sum_{m=1,3,5,\ldots}^{\infty} \frac{1}{m^2} \left(1 - \frac{\cosh \frac{m\pi\mu}{a} y}{\cosh \frac{m\pi\mu}{2c}}\right) \times \\
&\qquad \times \cos \frac{m\pi x}{a}.
\end{aligned}\right\} \tag{55.7}$$

Next, we introduce a new parameter depending on the ratio of the elastic moduli and the ratio of the sides:

$$d = \frac{c}{\sqrt{g}} = \frac{c}{\mu}, \tag{55.8}$$

and factors β, k_1, k_2, functions of this parameter, defined by the series

$$\beta = \frac{32d^2}{\pi^4} \sum_{m=1,3,5,\ldots}^{\infty} \frac{1}{m^4} \left(1 - \frac{2d}{m\pi} \tanh \frac{m\pi}{2d}\right); \tag{55.9}$$

$$k_1 = \frac{8d}{\pi^2\beta} \sum_{m=1,3,5,\ldots}^{\infty} \frac{(-1)^{\frac{m-1}{2}}}{m^2} \tanh \frac{m\pi}{2d}; \tag{55.10}$$

$$k_2 = \frac{d}{\beta} \left(1 - \frac{8}{\pi^2} \sum_{m=1,3,5,\ldots}^{\infty} \frac{1}{m^2 \cosh \frac{m\pi}{2d}}\right). \tag{55.11}$$

By using these factors, we can write very simple formulas for the torsional rigidity C, the twist, and the maximum shearing stress. We have

$$C = G_2 a b^3 \beta; \tag{55.12}$$

$$\vartheta = \frac{M}{G_2 a b^3 \beta}. \tag{55.13}$$

The shearing stress in an isotropic bar is maximum at the middles of the longer sides (see, for example, [37], p. 311). In an orthotropic bar, the points of maximum shearing stress may be at the middles either of the longer or of the shorter sides, depending on d. Thus, the maximum stress is determined from either of the two formulas:

$$\tau_{\max} = \frac{M}{ab^2} k_1 \tag{55.14}$$

(at the points B and B_1; see Fig. 83),

$$\tau_{\max} = \frac{M}{ab^2\mu} k_2 \tag{55.15}$$

(at the points O and A).

Table 20 gives numerical values of the factors β, k_1, k_2 calculated by formulas (55.9) to (55.11) for several values of the parameter d. The calculations were performed to three decimal places.*

The Factors β, k_1, k_2 from Formulas (55.9) to (55.11) **Table 20**

d	β	k_1	k_2	d	β	k_1	k_2
1	0.141	4.803	4.803	3	0.263	3.742	2.820
1.25	0.172	4.545	4.141	4	0.281	3.550	2.644
1.5	0.196	4.329	3.718	5	0.291	3.430	2.548
1.75	0.214	4.184	3.431	10	0.312	3.202	2.379
2	0.229	4.065	3.232	20	0.323	3.098	2.274
2.5	0.249	3.882	2.970	∞	0.333	3.000	—

Table 20 was obtained by revising more detailed tables of Saint-Venant [110]. It gives values of the factors for d greater than or equal to unity, i.e., for ratios of the sides $c \geqslant \sqrt{g}$. But it can also be used in cases where $c < \sqrt{g}$; it is only necessary to choose the notation for the sides so as to fulfil the condition $c \geqslant \sqrt{g}$, and this can always be done. Let, for example, the lengths of the sides be 4 and 3 cm,

* In Table 3 of [26] there are misprints.

and let the shear moduli for planes of elastic symmetry parallel to the sides be $1 \cdot 10^5$ kgf/cm² and $9 \cdot 10^5$ kgf/cm², respectively. In this case we must put $a = 4$, $b = 3$, $G_1 = 9 \cdot 10^5$, $G_2 = 1 \cdot 10^5$, and so $g = 1/9$, $\mu = 1/3$, $d = 4$; from the table we find

$$\beta = 0.281, \quad k_1 = 3.550, \quad k_2 = 2.644.$$

The maximum stress occurs at the middles of the shorter sides b; by (55.15),

$$\tau_{\max} = 0.220\ M.$$

At the middles of the longer sides a we have

$$\tau = 0.099\ M.$$

The solution of the torsion problem for an orthotropic homogeneous bar of rectangular section can be obtained in an alternate form, namely in the form of a double trigonometric series. In this case, let the origin of co-ordinates be taken at one of the corners of the section, with the x and y axes directed along the sides. By expanding the right-hand side of Eq. (52.13) in a double Fourier sine series, and seeking the expression for ψ also in the form of a double sine series, we obtain

$$\psi = \frac{32\vartheta G_2 a^2}{\pi^4} \sum_{m=1,3,5,\ldots}^{\infty} \sum_{m=1,3,5,\ldots}^{\infty} \frac{1}{mn} \frac{\sin\frac{m\pi x}{a} \sin\frac{n\pi y}{b}}{gm^2+n^2}. \tag{55.16}$$

It is obvious that this function vanishes on all four sides of the section. For all its extreme simplicity, this form of solution is not so convenient as (55.6) for the simple reason that the terms of series (55.16) decrease much more slowly than those of series (55.6). Formula (55.16) is therefore of theoretical interest, but the function ψ in the form of a single series is far more suitable for the use in practice.

Note that even though the solution for a non-orthotropic bar has been obtained (it is equivalent to the solution for a bar with a section in the form of a parallelogram found in [99]), it is considerably more difficult to realize it in practice than the solution for an orthotropic bar.

56. Approximate Methods for Solving Torsion Problems

There are quite a number of approximate methods available for the solution of torsion problems, which can be applied in cases where the finding of an exact solution involves great mathematical difficulties. Such difficulties may be encountered, for example, in the case when the region of the section is bounded by some complex curve, segments of curves and line segments, or the region of the section is multiply connected, or the moduli vary over the area of the section (non-homogeneous bar). These methods are based on various principles, both purely theoretical and experimental. We shall briefly discuss only the most commonly used method, viz. the energy method, which has several variants, and we shall show how comparatively simple problems can be solved by this method.

The general idea of the method is as follows. Instead of solving the boundary value problem for the second-order differential equation to which the torsion problem is reduced, a (mathematically) equivalent variational problem of finding the minimum of an integral is solved, and this is done in an approximate manner. An expression for the stress function in torsion is assigned, satisfying the required conditions on the contour of and inside the section and containing unknown constants (coefficients) and functions. The least work principle, discussed in Sec. 11 of Chap. 1, is then used, the minimum of an integral is sought, and equations are obtained for the unknown constants or differential equations for the unknown functions. For a homogeneous non-orthotropic bar under pure torsion, Castigliano's formula must be used, and the problem reduces to that of finding a function ψ giving a minimum value to the integral

$$U=\int\int\left[a_{44}\left(\frac{\partial\psi}{\partial x}\right)^2-2a_{45}\frac{\partial\psi}{\partial x}\frac{\partial\psi}{\partial y}+a_{55}\left(\frac{\partial\psi}{\partial y}\right)^2-4\vartheta\psi\right]dx\,dy. \tag{56.1}$$

The simplest procedure for solution is as follows. Assign a family of functions $\psi_{kl}(x, y)$ of two variables, x, y, depending on two integral parameters, k, l, which vanish on the contour of a simply connected region ($\psi_{kl}=0$). The

function ψ is sought in the form of a sum:

$$\psi = \sum_{k=1}^{K} \sum_{l=1}^{L} A_{kl} \psi_{kl}(x, y). \tag{56.2}$$

On substituting in expression (56.1), and integrating over the region of the section, this expression becomes a function of A_{kl}. Further, variables A_{kl} are sought, giving a minimum value to the function $U(A_{kl})$. If ψ is assigned in the form of (56.2), a non-homogeneous system of first-degree equations is obtained which must be solved.

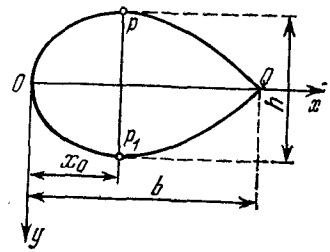

Fig. 86

In other cases it is more convenient to take, not ψ, but the torsion function φ as the unknown function; of course, it is then necessary to seek a minimum of an integral other than (56.1), following from the virtual work principle.

Consider an example. The region of the section has one axis of symmetry; its contour is formed by two curves,

$$y = af\left(\frac{x}{b}\right), \quad y = -af\left(\frac{x}{b}\right), \tag{56.3}$$

which intersect on the axis of symmetry, where a is a constant factor and

$$f\left(\frac{x}{b}\right) = \left(\frac{x}{b}\right)^m \left[1 - \left(\frac{x}{b}\right)^p\right]^q \tag{56.4}$$

(m, p, q are positive numbers, integral or fractional, or zeros).

For different values of m, p, q the contour has, of course, a different shape; for example, for $m = q = 0.5$, $p = 1$ it is an ellipse; for other values the regions bear a general resemblance, they are drop-shaped (Fig. 86). For such regions, a great many elasticity problems have been solved, particularly by L.S. Leibenzon in [23] and [24], and other

authors.* The approximate solutions using the function ψ are constructed by assigning a family of functions

$$\psi_{kl} = \left\{y^2 - a^2\left[f\left(\frac{x}{b}\right)\right]^2\right\} x^{k-1} y^{l-1} \tag{56.5}$$

$$(k = 1,\ 2,\ 3,\ \ldots,\ l = 1,\ 2,\ 3,\ \ldots)$$

and seeking ψ in the form of sum (56.2), where the coefficients A_{kl} must give a minimum value to integral (56.1).

Wishing to construct a solution only to a first approximation, we take just the first term in sum (56.2) rejecting the others, i.e., we assume

$$\psi = \psi_{11} = A_{11}\left\{y^2 - a^2\left[f\left(\frac{x}{b}\right)\right]^2\right\}. \tag{56.6}$$

Substituting in (56.1), and integrating, we obtain U as a second-degree polynomial in A_{11} and then seek its minimum. Leaving out rather elementary computations, we give an expression for the rigidity found as a first approximation for arbitrary parameters.

For arbitrary m, p, q,

$$C = \frac{8}{3} G_2 b a^3 \frac{B\left(\frac{3m+1}{p},\ 3q+1\right)}{p\left[1 + 3\varepsilon g\left(\frac{a}{b}\right)^2\right]}. \tag{56.7}$$

Here $g = G_2/G_1$;

$$B(\alpha,\ \beta) = \frac{\Gamma(\alpha)\,\Gamma(\beta)}{\Gamma(\alpha+\beta)}, \tag{56.8}$$

$$\Gamma(\alpha) = \int_0^\infty e^{-x} x^{\alpha-1}\, dx \tag{56.9}$$

---

* In his works L.S. Leibenzon referred to a (symmetrical or nonsymmetrical) figure bounded by two curves of the type of (56.3) as an airfoil section.

are the beta and gamma functions,* ε is a factor depending on the values of the beta function:

$$\varepsilon = \frac{\frac{m^2}{p} B\left(\frac{5m-1}{p}, 5q-1\right) - \frac{2m(m+pq)}{p} B\left(\frac{5m-1+p}{p}, 5q-1\right)}{\frac{1}{p} B\left(\frac{3m+1}{p}, 3q+1\right)} + \\ + \frac{\frac{(m+pq)^2}{p} B\left(\frac{5m-1+2p}{p}, 5q-1\right)}{\frac{1}{p} B\left(\frac{3m+1}{p}, 3q+1\right)}, \quad (56.10)$$

In particular, for the values of the parameters $m = 0.5$, $p = q = 1$, when the section is bounded by arcs of two semicubical parabolas

$$y = \pm a \sqrt{\frac{x}{b}} \left(1 - \frac{x}{b}\right), \quad (56.11)$$

we obtain [25] $3\varepsilon = 11/13$,

$$C = G_2 \frac{256}{3465} \frac{ba^3}{1 + \frac{11}{13} g \left(\frac{a}{b}\right)^2}. \quad (56.12)$$

If the virtual work principle is used, we can take, as a first approximation, a very simple function φ characterizing the warping of the plane of the cross section of a bar in the form of an elliptical cylinder:

$$\varphi = A_{11} xy + A_{01} y. \quad (56.13)$$

For a bar with a section bounded by two arcs of semicubical parabolas (56.11), the torsional rigidity is expressed as

$$C = G_2 \frac{256}{3465} \frac{ba^3}{1 + \frac{7}{11} g \left(\frac{a}{b}\right)^2} \quad (56.14)$$

Formula (56.12) gives a too low value of the rigidity, its lower bound, and (56.14) a too high value, its upper bound. In other words, the true value of the rigidity of the bar under consideration (with a section bounded by two arcs of

* See, for example, [19], pp. 821-823.

semicubical parabolas) lies between the values determined by formulas (56.12) and (56.14). This value of C can be refined by taking a larger number of terms in sum (56.2) and in the corresponding sum for φ, and determining the constants from the conditions for a minimum of the corresponding integrals. We shall not elaborate upon this topic, but refer the reader to Leibenzon's works [23] and [25] and the numerous authorities cited above.

We only mention the works of N.Kh. Arutyunyan [43], [44] devoted to the torsion problem for a bar with a section bounded by two similar (non-confocal) ellipses and two rays (in particular, a cut elliptical ring, a semiring, and an elliptical sector). Besides a detailed presentation using one variant of the energy method in Arutyunyan's papers, there is a brief account in the author's books [26] and [28].

A different kind of approximate method for solving torsion problems is based on introducing a small parameter into torsion equations and neglecting the powers of this parameter, beginning with a certain one, in the process of solution. Such a method, or procedure, was suggested by V.S. Sarkisyan for solving the torsion problem for a bar with a section representing a figure elongated in one direction ("elongated section", [35], [114], [116]).

To obtain approximate solutions of torsion problems, one can also use various analogies in the theory of torsion. The idea of these analogies is that the basic equation of the theory of torsion (the equation for the stress function ψ or the equation for the torsion function φ) is identical, apart from constant factors, with equations for other problems of mechanics and physics, which are easier to solve partially or completely using experiment. The most important analogy is that of Prandtl (membrane analogy). We shall not pursue the matter, but refer the reader to the book on torsion by N.Kh. Arutyunyan and B.L. Abramyan [4], where the question of analogies is treated in sufficient detail and the relevant literature is given.

Because of limited space we shall not consider other approximate methods such as the grid method, the finite element method, and we leave the discussion at this point.

57. Torsion of a Continuously Non-homogeneous Bar with Rectilinear Anisotropy

From the general equations presented in Chap. 3 it is easy to obtain, as a special case, the equations of torsion for continuously non-homogeneous bars.

Let there be a continuously non-homogeneous bar of uniform section having, at each point, a plane of elastic symmetry normal to the generators, but non-orthotropic in general. One end is assumed to be fixed, and the other end is acted on by forces reducing to a twisting moment M. The lateral surface is free from external forces and is not fixed; the forces at the fixed end reduce therefore to an equal but opposite moment M (Fig. 80). Assume no body forces.

Let the origin of co-ordinates be placed at a point of either of the ends, with the z axis directed parallel to the generators, and the x and y axes according to convenience with regard to the shape of the section. The generalized Hooke's law equations in the given co-ordinate system x, y, z are written as

$$\left.\begin{aligned}
\varepsilon_x &= a_{11}\sigma_x + a_{12}\sigma_y + a_{13}\sigma_z + a_{16}\tau_{xy},\\
\varepsilon_y &= a_{12}\sigma_x + a_{22}\sigma_y + a_{23}\sigma_z + a_{26}\tau_{xy},\\
\varepsilon_z &= a_{13}\sigma_x + a_{23}\sigma_y + a_{33}\sigma_z + a_{36}\tau_{xy},\\
\gamma_{yz} &= a_{44}\tau_{yz} + a_{45}\tau_{xz},\\
\gamma_{xz} &= a_{45}\tau_{yz} + a_{55}\tau_{xz},\\
\gamma_{xy} &= a_{16}\sigma_x + a_{26}\sigma_y + a_{36}\sigma_z + a_{66}\tau_{xy},
\end{aligned}\right\} \tag{57.1}$$

where a_{ij} are assumed to be continuous differentiable functions of two co-ordinates, x, y.

In a homogeneous bar having one plane of elastic symmetry normal to the generators and twisted by moments, only two stress components out of six are not zero; the others vanish:

$$\sigma_x = \sigma_y = \tau_{xy} = \sigma_z = 0. \tag{57.2}$$

Suppose that in a bar with the non-homogeneity in question the qualitative picture of the stress distribution is no different from that in the case of a homogeneous body (57.2), i.e., of

the six stresses at any point only two, τ_{xz} and τ_{yz}, are not zero and satisfy the equation

$$\frac{\partial \tau_{xz}}{\partial x} + \frac{\partial \tau_{yz}}{\partial y} = 0. \tag{57.3}$$

For a change, we shall derive the equations of torsion for such a bar, not from the general equations of Chap. 3, but independently.

The fundamental system of equilibrium equations for an elastic body in this case consists of Eq. (57.3) and Eqs. (57.1), which take the form

$$\left.\begin{aligned} &\frac{\partial u}{\partial x} = 0, \quad \frac{\partial v}{\partial y} = 0, \quad \frac{\partial w}{\partial z} = 0, \\ &\frac{\partial v}{\partial z} + \frac{\partial w}{\partial y} = a_{44}\tau_{yz} + a_{45}\tau_{xz}, \\ &\frac{\partial w}{\partial x} + \frac{\partial u}{\partial z} = a_{45}\tau_{yz} + a_{55}\tau_{xz}, \\ &\frac{\partial u}{\partial y} + \frac{\partial v}{\partial x} = 0. \end{aligned}\right\} \tag{57.4}$$

On integrating these equations in the order repeatedly used above, we obtain expressions for the displacements:

$$u = -\vartheta yz + u', \quad v = \vartheta xz + v', \quad w = \vartheta\varphi(x, y) + w', \tag{57.5}$$

where ϑ is the angle of twist per unit length, φ is the so-called torsion function characterizing the warping of the section, and u', v', w' are rigid-body displacements [see (18.8)]. The unknown functions are two stress components, $\tau_{xz}(x, y)$, $\tau_{yz}(x, y)$, and the torsion function $\varphi(x, y)$. These functions satisfy Eq. (57.3) and the equations

$$\left.\begin{aligned} a_{44}\tau_{yz} + a_{45}\tau_{xz} &= \vartheta\left(\frac{\partial\varphi}{\partial y} + x\right), \\ a_{45}\tau_{yz} + a_{55}\tau_{xz} &= \vartheta\left(\frac{\partial\varphi}{\partial x} - y\right). \end{aligned}\right\} \tag{57.6}$$

The only difference between these two equations and the equations for a homogeneous body with the same elastic symmetry is that a_{ij} in (57.6) are functions of x, y, whereas

for a homogeneous body they are constant. By choosing for the basic unknown the stress function ψ related to the stress components by the obvious equalities

$$\tau_{xz}=\frac{\partial\psi}{\partial y}, \quad \tau_{yz}=-\frac{\partial\psi}{\partial x}, \tag{57.7}$$

we obtain, by eliminating φ from Eqs. (57.6), an equation for ψ:

$$\frac{\partial}{\partial x}\left(a_{44}\frac{\partial\psi}{\partial x}-a_{45}\frac{\partial\psi}{\partial y}\right)+ \\ +\frac{\partial}{\partial y}\left(-a_{45}\frac{\partial\psi}{\partial x}+a_{55}\frac{\partial\psi}{\partial y}\right)=-2\vartheta. \tag{57.8}$$

The boundary condition is written very simply: on the contour of the cross section ψ = constant (or $\psi = 0$ if the region of the section is singly connected).

We may take the function φ as the basic unknown and, expressing the stresses in terms of its derivatives, use Eq. (57.3). We then obtain a second-order equation with variable coefficients for φ. The boundary condition is written in a more complicated way, and hence we shall not use this method for solving torsion problems, nor will the equation and condition be given here.

58. Torsion of an Orthotropic Bar of Rectangular Section with Variable Shear Moduli

Of the various cases of continuously non-homogeneous bars with variable moduli one of the simplest is the case of an orthotropic bar of rectangular section in which the shear moduli depend only on one co-ordinate, x or y.

Let a bar of rectangular section such as is shown in Fig. 85 be continuously non-homogeneous, its shear moduli being functions of the co-ordinate y (G_1 and G_2 do not vary along the side of length a). The functions are assumed to be continuous, single valued, and differentiable with respect to their argument y. Introducing the shear moduli, we must put, in Eq. (57.8),

$$a_{44}=\frac{1}{G_1}, \quad a_{45}=0, \quad a_{55}=\frac{1}{G_2},$$

to obtain

$$\frac{\partial^2\psi}{\partial x^2}+G_1(y)\frac{\partial}{\partial y}\left[\frac{1}{G_2(y)}\frac{\partial\psi}{\partial y}\right]=-2\vartheta G_1(y) \qquad (58.1)$$

The stresses are determined by (57.7).

The method for the solution of the problem is the same as for the corresponding torsion problem in the case of a homogeneous bar. We expand the right-hand side of (58.1) in a Fourier sine series and seek an expression for ψ satisfying beforehand the conditions on two sides, $x=0$ and $x=a$.

Equation (58.1) is rewritten as

$$\frac{\partial^2\psi}{\partial x^2}+G_1(y)\frac{\partial}{\partial y}\left[\frac{1}{G_2(y)}\frac{\partial\psi}{\partial y}\right]=$$

$$=-\frac{8G_1(y)}{\pi}\sum_{m=1,3,5,\ldots}^{\infty}\frac{1}{m}\sin\frac{m\pi x}{a}. \qquad (58.2)$$

Assuming

$$\psi=\sum_{m=1,3,5,\ldots}^{\infty}Y_m(y)\sin\frac{m\pi x}{a}, \qquad (58.3)$$

substituting in Eq. (58.2), and comparing the coefficients of the sines of like arguments on the left-hand and right-hand sides, we obtain equations for the unknown functions $Y_m(y)$:

$$_1'(y)\left[\frac{Y_m'(y)}{G_2(y)}\right]'-\left(\frac{m\pi}{a}\right)^2Y_m=-\frac{8G_1(y)}{\pi m}, \qquad (58.4)$$

$$(m=1,3,5,\ldots)$$

These are linear equations with varible coefficients.

Denoting by Y_{m1}, Y_{m2} linearly independent solutions of the homogeneous equation corresponding to a given m, and by Y_{m0} a particular solution of the non-homogeneous equation with the same m, we write the general integral of (58.4), for any given G_1 and G_2,

$$Y_m=A_mY_{m1}+B_mY_{m2}+Y_{m0}. \qquad (58.5)$$

The stress function is written as

$$\psi=\sum_{m=1,3,5,\ldots}^{\infty}(A_mY_{m1}+B_mY_{m2}+Y_{m0})\sin\frac{m\pi x}{a}. \qquad (58.6)$$

The boundary conditions on the sides $x = 0$, $x = a$ are satisfied. By requiring that the boundary conditions should be satisfied on the other two sides, $y = \pm b/2$, we obtain, for each pair of coefficients A_m, B_m, a system of equations from which the unknown coefficients are determined once Y_{m1}, Y_{m2}, Y_{m0} have been found. These particular solutions can be found, not for all values of the functions G_1, G_2, but only for certain special values, which are apparently not very few in number. Some cases will be considered below. The simplest case appears to be the one where the shear moduli are exponential functions of y, i.e.,

$$G_1 = g_1 e^{\frac{n\pi y}{b}}, \quad G_2 = g_2 e^{\frac{n\pi y}{b}}. \tag{58.7}$$

Here g_1, g_2 are constants having the dimensions of shear modulus (or, what is equivalent, of stress), n is any real non-dimensional constant other than zero (positive, negative, integral, fractional, irrational, etc.).

We introduce the notation:

$$g = \frac{G_2}{G_1} = \frac{g_2}{g_1} = \text{constant}, \quad c = \frac{a}{b}, \quad d = \frac{e}{\sqrt{g}}. \tag{58.8}$$

$$\gamma_m = \sqrt{n^2 + \left(\frac{2m}{d}\right)^2}, \tag{58.9}$$

$$s_m = 0.5\,(n + \gamma_m), \quad t_m = 0.5\,(n - \gamma_m). \tag{58.10}$$

For simplicity, the subscript m on γ_m, s_m, t_m will be omitted henceforth.

The general expression for the stress function ψ with undetermined coefficients A_m, B_m is written as

$$\psi = \frac{8g_1 a^2 \vartheta}{\pi^3} \sum_{m=1,\,3,\,5,\,\ldots}^{\infty} \left(A_m e^{\frac{s\pi y}{b}} + B_m e^{\frac{t\pi y}{b}} + e^{\frac{n\pi y}{b}}\right) \frac{1}{m^3} \sin\frac{m\pi x}{a}. \tag{58.11}$$

On determining the coefficients from the conditions on the sides $y = \pm b/2$, we finally obtain

$$\psi = \frac{8g_1 a^2 \vartheta}{\pi^3} \sum_{m=1,\,3,\,5,\,\ldots}^{\infty} \left(e^{\frac{n\pi y}{b}} - \frac{\sinh\frac{s\pi}{2}\, e^{\frac{s\pi y}{b}} - \sinh\frac{t\pi}{2}\, e^{\frac{t\pi y}{b}}}{\sinh\frac{\gamma\pi}{2}} \right) \times$$
$$\times \frac{1}{m^3} \sin\frac{m\pi x}{a}. \tag{58.12}$$

To begin with, we must find the rigidity C, express the twisting moment M, and the angle of twist per unit length ϑ (the twist) in terms of C, and then determine the stresses at any point and at the nodal points, viz. at the middles of the sides. The rigidity is determined by formula (51.9):

$$C = \frac{2}{\vartheta} \int\int \psi dx\, dy. \tag{51.9}$$

By performing the integration over the area of the rectangle, a by b, transforming to g_2, and summing a part of the series by using the formula ([12], p. 21)

$$\sum_{m=1,\,3,\,5,\,\ldots}^{\infty} \frac{1}{m^4} = \frac{\pi^4}{96}, \tag{58.13}$$

we obtain a formula for the rigidity:

$$C = g_2 a b^3 \beta. \tag{58.14}$$

Here

$$\beta = \frac{2d^2}{3\pi n} \sin\frac{n\pi}{2} + \frac{32d^4}{\pi^5} \sum_{m=1,\,3,\,5,\,\ldots}^{\infty} \frac{\gamma - s\cosh t\pi + t\cosh s\pi}{m^6 \sinh\frac{\gamma\pi}{2}} \tag{58.15}$$

[see (58.10)].

No further transformations of this formula will be made, taking it as final. The angle of twist per unit length is

$$\vartheta = \frac{M}{g_2 a b^3 \beta}. \tag{58.16}$$

The total angle of twist $\omega_{\max}$ for the whole bar of length l is

$$\omega_{\max} = \vartheta l = \frac{Ml}{g_2 a b^3 \beta}. \tag{58.17}$$

By differentiating the stress function (58.12), we find, from formulas (57.7), the stresses themselves at any point x, y:

$$\left.\begin{aligned}
\tau_{xz} &= \frac{M}{ab^2}\frac{8d^2}{\pi^2\beta}\sum_{m=1,3,5,\ldots}^{\infty}\left(ne^{\frac{n\pi y}{b}} - \right.\\
&\left. - \frac{s\sinh\frac{s\pi}{2}e^{\frac{s\pi y}{b}} - t\sinh\frac{t\pi}{2}e^{\frac{t\pi y}{b}}}{\sinh\frac{\gamma\pi}{2}}\right)\frac{1}{m^3}\sin\frac{m\pi x}{a},\\
\tau_{yz} &= -\frac{M}{ab^2\sqrt{g}}\frac{8d}{\pi^2\beta}\sum_{m=1,3,5,\ldots}^{\infty}\left(e^{\frac{n\pi y}{b}} - \right.\\
&\left. - \frac{\sinh\frac{s\pi}{2}e^{\frac{s\pi y}{b}} - \sinh\frac{t\pi}{2}e^{\frac{t\pi y}{b}}}{\sinh\frac{\gamma\pi}{2}}\right)\frac{1}{m^2}\cos\frac{m\pi x}{a}.
\end{aligned}\right\} \quad (58.18)$$

As investigations and calculations show, the maximum stress in the whole bar occurs at the middle of one of the sides (the longer or shorter side) and is determined from either of the formulas

$$\tau_{\max} = \frac{M}{ab^2}k_1, \quad \tau_{\max} = \frac{M}{ab^2\sqrt{g}}k_2. \qquad (58.19)$$

The structure of the factors k_1 and k_2 is clear from formulas (58.18).

Table 21 gives numerical values of the rigidity factor β and the maximum stress factors k_1 and k_2 for a bar of rectangular section with moduli (58.7) for several values of n and d. The calculations were performed to 4 or 5 significant figures.

For given values of n and d, the maximum stress must obviously be determined from the first formula of (58.19), and not from the second (except for $n = 0.1$, $d = 0.5$). For other values of the parameters, not indicated in Table 21, the maximum stress is determined from the second formula

The Rigidity Factor β and the Maximum Stress Factors $_1k$ and k_2 **Table 21**

n	d	β	k_1	k_2	n	d	β	k_1	k_2
0.1	0.5	0.05728	7.359	8.117	1	0.5	0.06932	19.786	6.606
	1	0.1407	5.385	4.797		1	0.1532	13.653	4.165
	2	0.2287	4.520	3.230		2	0.2304	11.009	2.956
	3	0.2632	4.154	2.817		3	0.2592	10.079	2.632
	5	0.2911	3.806	2.547		5	0.2824	9.309	2.416
0.5	0.5	0.06005	11.855	7.714	2	0.5	0.1174	43.796	3.744
	1	0.1434	8.311	4.638		1	0.2101	31.671	2.669
	2	0.2282	6.796	3.167		2	0.2762	26.149	2.090
	3	0.2611	6.219	2.778		3	0.2991	24.321	1.931
	5	0.2875	5.705	2.523		5	0.3174	22.975	1.819

of (58.19) ($k_2/\sqrt{g} > k_1$). Of course, Table 21 can only serve to illustrate the theory, and not for the analysis of all the various bars of this type since it contains factors for a too small number of values of the parameters n, d.

59. Some Other Cases of a Non-homogeneous Orthotropic Bar of Rectangular Section

Besides an exponential relation between the shear moduli and y, a number of relations between G_1, G_2 and y may be indicated for which the particular solutions Y_{m1}, Y_{m2}, Y_{m0} of the equation for the stress function (58.4) can be obtained in explicit form, and hence the conditions on the sides $x = 0$, $x = a$, $y = \pm b/2$ can be satisfied, thereby giving the solution of the torsion problem in explicit form. To begin with, we must mention the case when G_1 and G_2 are power-law functions of the distance y (see [90] and [28]).

Let Fig. 87 represent a cross section of a bar, the dimensions, and the arrangement of the axes; y_0 is the distance of a given straight line parallel to the side a from the x axis.

Let further the moduli be given as the functions

$$\left.\begin{aligned} G_1 &= g_1\left(\frac{y+y_0}{b}\right)^n, \\ G_2 &= g_2\left(\frac{y+y_0}{b}\right)^n, \end{aligned}\right\} \tag{59.1}$$

where g_1, g_2 are factors having the dimensions of shear modulus (or, what is equivalent, of stress), n is an arbitrary real number. For a positive and a negative n, the nature of

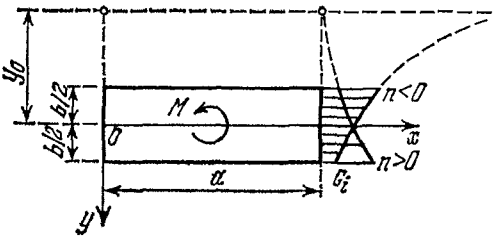

Fig. 87

variation of the moduli along the side b is shown on the right in Fig. 87. For a positive n, the prolongation of the G_i curve passes through the point $y = -y_0$; for a negative n, the straight line $y = -y_0$ is an asymptote of the G_i curve.

We introduce the notation:

$$\left.\begin{aligned} &y_1 = y + y_0, \quad \eta = \frac{y}{b}, \quad \eta_0 = \frac{y_0}{b}, \\ &\eta_1 = \eta_0 - 0.5, \quad \eta_2 = \eta_0 + 0.5, \\ &c = \frac{a}{b}, \quad g = \frac{G_2}{G_1} = \frac{g_2}{g_1} = \text{constant}, \quad d = \frac{c}{\sqrt{g}}, \\ &\gamma = \frac{m\pi}{a}\sqrt{g}, \quad \alpha = -\frac{n+1}{2}, \quad N = \left|\frac{n+1}{2}\right|. \end{aligned}\right\} \tag{59.2}$$

By seeking the expression for the function ψ in the form of series (58.3), we obtain an ordinary equation for Y_m:

$$Y_m'' - \frac{n}{y_1} Y_m' - \gamma^2 Y_m = -\frac{8g_2 b^n}{m\pi} y_1^n. \tag{59.3}$$

where primes denote derivatives with respect to y_1. The particular solutions of the homogeneous equation depend

on n and are expressed in terms of Bessel functions of order N (see [12], p. 670). If n is not an integer,

$$Y_{m1} = y_1^{-\alpha} J_N(i\gamma y_1) \quad Y_{m2} = y_1^{-\alpha} J_{-N}(i\gamma y_1) \quad (i = \sqrt{-1}), \tag{59.4}$$

where J_N, J_{-N} are the Bessel functions of the first kind.

If N is an integer, the function J_{-N} must be replaced by the Bessel function of the second kind of the same argument. In the present case the argument of the Bessel functions is pure imaginary and they must therefore be replaced by modified functions. We have

$$Y_{m1} = y_1^{-\alpha} I_N(\gamma y_1), \quad Y_{m2} = y_1^{-\alpha} I_{-N}(\gamma y_1) \tag{59.5}$$

(N is not an integer) or

$$Y_{m1} = y_1^{-\alpha} I_N(\gamma y_1), \quad Y_{m2} = y_1^{-\alpha} K_N(\gamma y_1) \tag{59.6}$$

(N is an integer; K_N is the Macdonald function).

The particular solution Y_{m0} of the non-homogeneous equation (59.3) is found by quadrature, knowing Y_{m1}, as

$$Y_{m0} = -\frac{8g_2}{\pi b^4 m} Y_{m1} \int \left(Y_{m1}^{-2} y_1^n \int Y_{m1}\, dy_1 \right) dy_1 \tag{59.7}$$

Below are given particular solutions of the homogeneous equation for several specifications of the moduli.

(1) *Linear relation*:

$$G_i = g_i(\eta + \eta_0), \quad n = 1, \quad \alpha = -1, \quad N = 1, \tag{59.8}$$

$$\left.\begin{aligned} Y_{m1} &= y_1 I_1\left[\frac{m\pi}{d}(\eta + \eta_0)\right], \\ Y_{m2} &= y_1 K_1\left[\frac{m\pi}{d}(\eta + \eta_0)\right], \end{aligned}\right\} \tag{59.9}$$

(2) *Inverse proportionality to the distance*:

$$G_i = g_i(\eta + \eta_0)^{-1}, \quad n = -1, \quad \alpha = 0, \quad N = 0, \tag{59.10}$$

$$Y_{m1} = I_0\left[\frac{m\pi}{d}(\eta + \eta_0)\right], \quad Y_{m2} = K_0\left[\frac{m\pi}{d}(\eta + \eta_0)\right]. \tag{59.11}$$

(3) *Inverse proportionality to the square of the distance*:

$$G_i = g_i(\eta+\eta_0)^{-2}, \quad n=-2, \quad \alpha=\frac{1}{2}, \quad N=\frac{1}{2}, \tag{59.12}$$

$$Y_{m1}=\frac{\sinh\frac{m\pi}{d}(\eta+\eta_0)}{\eta+\eta_0}, \quad Y_{m2}=\frac{\cosh\frac{m\pi}{d}(\eta+\eta_0)}{\eta+\eta_0}. \tag{59.13}$$

In the third case the particular solutions are expressed in terms of elementary functions. This is also true for the fourth case, the simplest as regards derivations and computations.

(4) *Quadratic relation*:

$$G_i = g_i(\eta+\eta_0)^2, \quad n=2, \quad \alpha=-\frac{3}{2}, \quad N=\frac{3}{2}. \tag{59.14}$$

In this case we obtain

$$\left.\begin{aligned} Y_{m1}&=\cosh\frac{m\pi}{d}(\eta+\eta_0)-\frac{m\pi}{d}(\eta+\eta_0)\sinh\frac{m\pi}{d}(\eta+\eta_0),\\ Y_{m2}&=\sinh\frac{m\pi}{d}(\eta+\eta_0)-\frac{m\pi}{d}(\eta+\eta_0)\cosh\frac{m\pi}{d}(\eta+\eta_0),\\ Y_{m0}&=\frac{8g_1a^2}{\pi^3m^3}\left[(\eta+\eta_0)^2-\frac{2d^2}{\pi^2m^2}\right]. \end{aligned}\right\} \tag{59.15}$$

The expression for the stress function satisfying the conditions on the contour of the section will not be given since it is not used in what follows; the rigidity and stresses for the present case are not calculated.*

The torsion problem is easily solved in cases where the shear moduli are proportional to different, and not the same, powers of the sum $\eta+\eta_0$, i.e.,**

$$G_1 = g_1(\eta+\eta_0)^m, \quad G_2 = g_2(\eta+\eta_0)^n \quad (m \neq n). \tag{59.16}$$

The situation is particularly simple if $m = n+2$ (n is any real number); the stress function is expressed in terms of power-law functions of the sum $\eta+\eta_0$.

The torsion problem is easily solved in the case when one side of a section is much longer than the other (a bar

* The function ψ is given in [28] (Chap. 3, Sec. 19).

** See the author's book [28] (Chap. 3); the solution of the following problem *ibid.*

with a section in the form of a narrow rectangle). By placing the origin of co-ordinates on one of the axes of the bar far from the shorter part of the contour (Fig. 88), and considering only cases where the principal shear modulus G_2 for planes parallel to the longer sides depends on y alone,

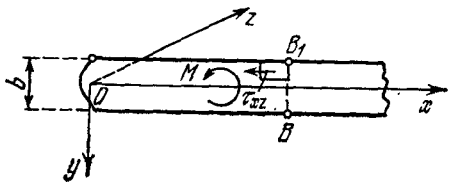

Fig. 88

and the other is an arbitrary continuous function of x and y, the function ψ may be assumed to depend only on y. It is obvious that this function satisfies the equation

$$\left(\frac{\psi'}{G_2}\right)' = -2\vartheta, \tag{59.17}$$

from which we obtain the function ψ itself with two arbitrary constants;

$$\psi = -2\vartheta f_1(y) + Af_0(y) + B. \tag{59.18}$$

Here we have used the notation:

$$f_1(y) = \int G_2 y\, dy, \quad f_0(y) = \int G_2\, dy. \tag{59.19}$$

The constants A and B are determined by requiring that the stress function should be zero on the surfaces $y = \pm b/2$.

60. Torsion of a Cylindrical or Prismatic Bar Having Cylindrical Anisotropy

Let there be a cylindrical or prismatic bar of arbitrary section having cylindrical anisotropy with an axis of anisotropy parallel to the generators. The lateral surface is free from external forces and from all restraint, body forces are absent, and the ends are acted on by distributed forces reducing to twisting moments M of opposite sense.

We consider the pure torsion of a continuously non-homogeneous bar at each point of which there is a plane of elastic symmetry normal to the generators, and the coefficients a_{ij} do not vary along the length. The equations of the theory of torsion will be derived directly without using the material of Chap. 3. Suppose that only two stress components are different from zero and are independent of the longitudinal coordinate z, and the remaining four vanish. By taking some point at the end as the origin of co-ordinates, and choosing the z axis parallel to the generators of the cylinder, we write the fundamental system of equations in cylindrical co-ordinates as

$$\sigma_r = \sigma_\theta = \sigma_z = \tau_{r\theta} = 0, \quad \frac{\partial \tau_{rz}}{\partial r} + \frac{1}{r}\frac{\partial \tau_{\theta z}}{\partial \theta} + \frac{\tau_{rz}}{r} = 0; \tag{60.1}$$

$$\left.\begin{aligned} &\frac{\partial u_r}{\partial r} = 0, \quad \frac{\partial u_\theta}{\partial \theta} + u_r = 0, \quad \frac{\partial w}{\partial z} = 0, \\ &\frac{1}{r}\frac{\partial w}{\partial \theta} + \frac{\partial u_\theta}{\partial z} = a_{44}\tau_{\theta z} + a_{45}\tau_{rz}, \\ &\frac{\partial u_r}{\partial z} + \frac{\partial w}{\partial r} = a_{45}\tau_{\theta z} + a_{55}\tau_{rz}, \\ &\frac{1}{r}\frac{\partial u_r}{\partial \theta} + \frac{\partial u_\theta}{\partial r} - \frac{u_\theta}{r} = 0. \end{aligned}\right\} \tag{60.2}$$

Next, we determine displacements from Eqs. (60.2) using them in the usual order, 3, 4, 5 and 1, 2, 6. As a result, the following formulas are obtained for displacements:

$$u_r = u_r', \quad u_\theta = \vartheta r z + u_\theta', \quad w = \vartheta \varphi(r, \theta) + w'. \tag{60.3}$$

Here u_r', u_θ', w' are rigid-body displacements depending on six constants, viz. three rotations ω_i and three translations [see (23.13)]; ϑ is the angle of twist per unit length (twist) and $\varphi(r, \theta)$ is the so-called torsion function. The unknown functions of the variables r, θ, viz. τ_{rz}, $\tau_{\theta z}$, φ (two stresses and the torsion function), satisfy the equations

$$\left.\begin{aligned} &a_{44}\tau_{\theta z} + a_{45}\tau_{rz} = \vartheta\left(\frac{1}{r}\frac{\partial \varphi}{\partial \theta} + r\right), \\ &a_{45}\tau_{\theta z} + a_{55}\tau_{rz} = \vartheta\frac{\partial \varphi}{\partial r} \end{aligned}\right\} \tag{60.4}$$

and the equilibrium equation for a continuous medium (60.1).

Note that Eqs. (60.4) involve only three strain coefficients, a_{44}, a_{45}, a_{55}, and the other coefficients may be any (continuous, at least) functions of all three variables, r, θ, z. The stresses on the lateral surface must satisfy the condition

$$\tau_{rz} \cos (n, r) + \tau_{\theta z} \cos (n, \theta) = 0, \tag{60.5}$$

and one condition at each end:

$$\int\int \tau_{\theta z} r^2 \, dr \, d\theta = M \tag{60.6}$$

(the moments at the two ends have opposite senses of rotation). From Eq. (60.6) we determine the twist ϑ or the rigidity since $\vartheta C = M$.

As in the case of a rectilinearly anisotropic bar, two procedures may be suggested for the solution of the torsion problem, depending on the particular function used as the basic unknown.

Procedure 1. The unknown function is taken to be the stress function in torsion ψ:

$$\tau_{rz} = \frac{1}{r} \frac{\partial \psi}{\partial \theta}, \quad \tau_{\theta z} = -\frac{\partial \psi}{\partial r}. \tag{60.7}$$

By eliminating φ from (60.4), we obtain the equation

$$\frac{\partial}{\partial r}\left(a_{44} r \frac{\partial \psi}{\partial r} - a_{45} \frac{\partial \psi}{\partial \theta}\right) + \\ + \frac{\partial}{\partial \theta}\left(-a_{45} \frac{\partial \psi}{\partial r} + a_{55} \frac{1}{r} \frac{\partial \psi}{\partial \theta}\right) = -2\vartheta r. \tag{60.8}$$

On the contour of the cross section

$$\psi = c = \text{constant}. \tag{60.9}$$

In the case of a simply connected region, when we may set $c = 0$, the rigidity is determined by the formula

$$C = \frac{2}{\vartheta} \int\int \psi r \, dr \, d\theta. \tag{60.10}$$

In particular, for an orthotropic bar with planes of elastic symmetry normal to the co-ordinate directions r, θ, z, instead of (60.8) we have

$$\frac{\partial}{\partial r}\left(\frac{r}{G_1}\frac{\partial\psi}{\partial r}\right)+\frac{\partial}{\partial\theta}\left(\frac{1}{rG_2}\frac{\partial\psi}{\partial\theta}\right)=-2\vartheta r, \qquad (60.11)$$

where $G_2(r, \theta)$, $G_1(r, \theta)$ are the shear moduli for planes passing through the z axis parallel to the axis of anisotropy and planes parallel to z. For a homogeneous orthotropic bar, Eq. (60.11) becomes

$$g\left(\frac{\partial^2\psi}{\partial r^2}+\frac{1}{r}\frac{\partial\psi}{\partial r}\right)+\frac{1}{r^2}\frac{\partial^2\psi}{\partial\theta^2}=-2\vartheta G_2, \qquad (60.12)$$

$$g=\frac{G_2}{G_1}=\frac{G_{rz}}{G_{\theta z}}. \qquad (60.13)$$

Procedure 2. The unknown function is taken to be the torsion function $\varphi(r, \theta)$ in terms of which it is necessary to express the stresses; the torsion function must then be found from the condition on the contour of the section (60.5).

We have

$$\left.\begin{aligned}\tau_{\theta z}&=\vartheta\left[A_{44}\left(\frac{1}{r}\frac{\partial\varphi}{\partial\theta}+r\right)+A_{45}\frac{\partial\varphi}{\partial r}\right],\\ \tau_{rz}&=\vartheta\left[A_{45}\left(\frac{1}{r}\frac{\partial\varphi}{\partial\theta}+r\right)+A_{55}\frac{\partial\varphi}{\partial r}\right],\end{aligned}\right\} \qquad (60.14)$$

where A_{ij} are the coefficients obtained by solving Eqs. (60.4) for the stress components. Substituting (60.14) in (60.1), we obtain an equation for φ. In particular, for a homogeneous body it is of the form

$$A_{55}\left(\frac{\partial^2\varphi}{\partial r^2}+\frac{1}{r}\frac{\partial\varphi}{\partial r}\right)+2A_{45}\frac{1}{r}\frac{\partial^2\varphi}{\partial r\,\partial\theta}+A_{44}\frac{1}{r^2}\frac{\partial^2\varphi}{\partial\theta^2}=-2A_{45}. \qquad (60.15)$$

The second procedure is less convenient since the boundary condition is found to be more complicated than condition (60.9). This was also observed in the case of a rectilinearly anisotropic body (Sec. 51).

61. Torsion of a Non-homogeneous Hollow Circular Cylinder Having Cylindrical Anisotropy

Consider a body in the form of a hollow circular cylinder having cylindrical anisotropy and twisted by moments applied to the ends (see [28], Chap. 3, Sec. 24). It is assumed that the body is bounded by the surfaces of coaxial circular cylinders of radii a, b ($b > a$) and length l. One end may be taken to be rigidly fixed, and the other subjected to forces reducing to a twisting moment M. The anisotropy of the cylinder is supposed to be cylindrical, with the axis of anisotropy coinciding with the geometrical axis and chosen as the z axis; the origin O is placed at the free end. The anisotropy is not assumed to be of the most general kind, but the following restrictions are imposed on it: (1) the elastic properties are such that the extensions ε_r, ε_θ, ε_z are independent of the stress $\tau_{\theta z}$, and hence the coefficients a_{14}, a_{24}, a_{34} in the generalized Hooke's law equations (10.2) are zero; (2) the coefficients a_{44}, a_{45}, a_{55} depend only on the distance r from the centre of the cross section and are independent of z and the angle θ, which is measured from the x axis directed along an arbitrary fixed radius of the section (Fig. 89); (3) the remaining coefficients may be arbitrary functions of three co-ordinates, r, θ, z, and they have no influence on the stress distribution.

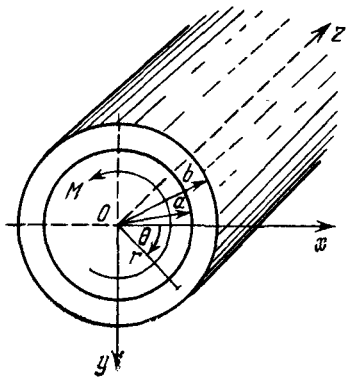

Fig. 89

If the cylinder satisfies all these conditions, there is no need to use the general equations of the type considered in Chap. 3, and it is simpler to derive the general equations for stresses and displacements independently taking as a basis only the most general equilibrium equations for an arbitrary elastic body. All these equations can be satis-

fied assuming that only one stress component, $\tau_{\theta z}$, out of six and only two projections of displacement out of three are not zero:

$$\sigma_r = \sigma_\theta = \tau_{r\theta} = \sigma_z = \tau_{rz} = 0, \qquad u_r = 0. \tag{61.1}$$

The stress $\tau_{\theta z}$ depends only on r (if the distribution of forces over the end is not specified and only the twisting moment M is given),* and the generalized Hooke's law equations become

$$\left.\begin{aligned} &\frac{\partial u_\theta}{\partial \theta} = 0, \quad \frac{\partial w}{\partial z} = 0, \quad \frac{1}{r}\frac{\partial w}{\partial \theta} + \frac{\partial u_\theta}{\partial z} = a_{44}\tau_{\theta z}, \\ &\frac{\partial w}{\partial r} = a_{45}\tau_{\theta z}, \quad \frac{\partial u_\theta}{\partial r} - \frac{u_\theta}{r} = a_{46}\tau_{\theta z}. \end{aligned}\right\} \tag{61.2}$$

By integrating these elementary equations, we obtain

$$\tau_{\theta z} = \vartheta r / a_{44}, \tag{61.3}$$

$$\left.\begin{aligned} &u_\theta = \vartheta r \left(z + \int \frac{a_{46}}{a_{44}}\, dr\right) + \omega_3 r, \\ &w = \vartheta \int \frac{r a_{45}}{a_{44}}\, dr + w_0, \quad u_r = 0. \end{aligned}\right\} \tag{61.4}$$

Here ϑ is, as before, the angle of twist per unit length. Of the constants characterizing rigid-body displacements, only two are retained: the translation in the axial direction w_0 and the rotation in the plane of the cross section ω_3; these constants are determined from the equations at the fixed end assuming a circumference of given radius R to be stationary there.

The rigidity is determined by the formula

$$C = \frac{2\pi}{\vartheta} \int_a^b \tau_{\theta z} r^2\, dr, \tag{61.5}$$

and hence, by (61.3),

$$C = 2\pi \int_a^b \frac{r^3}{a_{44}}\, dr. \tag{61.6}$$

* If the distribution of tangential forces over the end is given and depends on θ, the stresses, of course, also depend on θ.

Consequently,

$$\vartheta = \frac{M}{C}, \tag{61.7}$$

$$\tau_{\theta z} = \frac{M}{C} \frac{r}{a_{44}(r)}. \tag{61.8}$$

The total angle of twist is

$$\omega_{\max} = \frac{Ml}{C}. \tag{61.9}$$

The displacement formulas (61.4) show that (1) the cross sections become warped if a_{45} is not zero, and remain plane if $a_{45} = 0$; (2) the projections of radii on the plane of the cross section become curved if $a_{46} \neq 0$; they remain straight if $a_{46} = 0$. If the bar is orthotropic, the cross sections remain plane and the radii remain straight (do not become curved) during torsion.

Since the stress is affected only by the strain coefficient a_{44} or the shear modulus $G_1(r) = G_{\theta z}$, it follows that the stresses in a non-homogeneous isotropic bar with a shear modulus $G_1(r)$ are exactly the same as in a non-homogeneous curvilinearly anisotropic bar for which $a_{44} = 1/G_1$. A special case of the problem under study was considered long ago by Voigt in [128], and a more general case in the author's book [26] (Chap. 4, Sec. 44).

Consider a special case when the shear modulus $G_{\theta z}$ or G_1 varies along a radius according to a power law, i.e., it is proportional to some power of the distance r from the centre, namely

$$G_1 = g_1 \left(\frac{r}{b}\right)^n, \tag{61.10}$$

where n is any real number. In all such cases we obtain

$$C = \frac{2\pi g_1}{4+n}(1 - c^{4+n})\, b^4, \tag{61.11}$$

$$\tau_{\theta z} = \frac{M}{2\pi b^{4+n}}(4+n)\frac{r^{1+n}}{1-c^{4+n}}, \tag{61.12}$$

where $c = a/b$.

If the shear modulus varies along a radius as the nth power of the distance r from the centre, the stress also varies as a power of r but one unit greater. If n is a positive number or a negative number larger than -1, the maximum

stress occurs near the outer surface:

$$\tau_{\max} = \frac{4M}{\pi d^3} \frac{4+n}{1-c^{4+n}}. \tag{61.13}$$

For negative n less than minus unity, the maximum stress occurs on the inner surface, i.e., on the surface of a cavity,

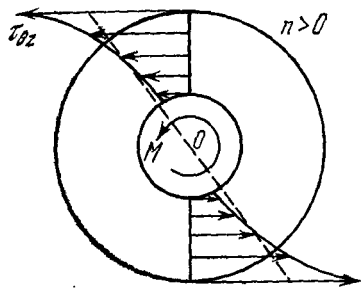

Fig. 90

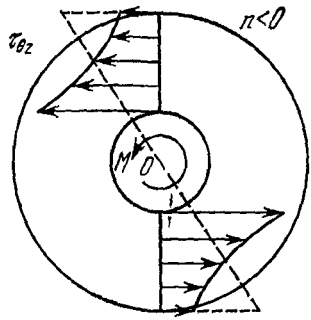

Fig. 91

and if there is no cavity the stresses increase indefinitely as the axis is approached (there appears to be a concentration of stress near the axis). In a cylinder of homogeneous material $n = 0$ and

$$C = \frac{G_1 \pi d^4 (1-c^4)}{32}, \tag{61.14}$$

$$\tau_{\theta z} = \frac{2M}{\pi b^4} \frac{r}{1-c^4} = \frac{M}{I_0} r, \tag{61.15}$$

where $I_0 = \pi b^4 (1 - c^4)/2$ is the polar moment of inertia with respect to the centre of the section of the cylinder.

It is essential to mention a special case: $n = -4$. For this n, the rigidity and stress become indeterminate, 0 : 0. By evaluating the indeterminacies by l'Hospital's rule, instead of (61.11) and (61.12) we obtain*

$$C = -2\pi g_1 \ln c \cdot b^4, \tag{61.16}$$

$$\tau_{\theta z} = \frac{M}{2\pi} \frac{\ln c}{r^3}. \tag{61.17}$$

Figures 90 and 91 give an idea of the nature of variation of the stress along a diameter for positive and negative n;

* $c < 1$; $\ln c < 0$.

dashed lines show the variation of the stress along a diameter in a homogeneous bar of the same dimensions.

The problem becomes more complicated if the coefficient a_{44} (or the shear modulus $G_{\theta z}$) is given as a function of two co-ordinates, r and z, i.e., if it varies not only along a radius, but also along the length. We may note special cases when this problem is also solved in an elementary way. One of these is described below (see [28]).

Suppose that the cylinder is orthotropic and the strain coefficient is the product of a function of only r and a function of only z:

$$a_{44} = b_{44}(r)\, Z(z), \tag{61.18}$$

the other eight coefficients are arbitrary functions of position. In this case the displacements are

$$u_r = w = 0, \quad u_\theta = \vartheta r \int_t^z Z\, dz, \tag{61.19}$$

the rigidity and stress are determined by formulas (61.6) and (61.8), where a_{44} must be replaced by b_{44}.

Of interest is the problem of the torsion of a non-homogeneous cylindrical bar made up of a certain number N of hollow cylinders (tubes) rigidly joined over the contact surfaces by bonding or soldering (Fig. 92). We shall consider the case when each layer is cylindrically anisotropic and homogeneous, and at each point there is a plane of elastic symmetry normal to the geometrical axis (this plane is a plane of elastic symmetry for all layers as well as for the whole bar); the layers are joined together without pretensioning, i.e., initial stresses are absent. Let a_i denote the distance from the centre to the surface of contact between the layers numbered i and $i+1$, with $a_0 = a$, $a_N = b$ (the inner and outer radii).

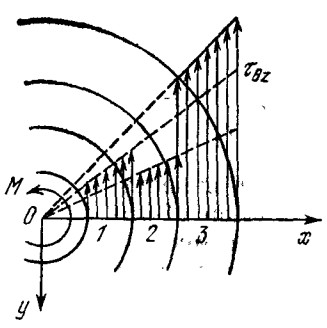

Fig. 92

Introducing the notation a^i_{41}, a^i_{45}, and

$$\alpha_i = \frac{a^i_{45}}{a^i_{44}}, \tag{61.20}$$

and satisfying the obvious conditions on the inner and outer surfaces and on the contact surfaces, we obtain, after elementary manipulation, the following final formulas (the superscripts are the layer numbers throughout):

$$u^i_\theta = -\vartheta(l-z)r, \quad u^i_r = 0, \quad (i=1,2,\ldots,N); \tag{61.21}$$

$$\left.\begin{aligned}
&w^1 = 0.5\vartheta\alpha_1 r^2 + w_0,\\
&w^2 = 0.5\vartheta[\alpha_1 a_1^2 + \alpha_2(r^2 - a_1^2)] + w_0,\\
&\ldots\ldots\ldots\ldots\ldots\ldots\ldots\ldots\\
&w^i = 0.5\vartheta[\alpha_1 a_1^2 + \alpha_2(a_2^2 - a_1^2) + \ldots\\
&\qquad\qquad \ldots + \alpha_i(r^2 - a_{i-1}^2)] + w_0,\\
&\ldots\ldots\ldots\ldots\ldots\ldots\ldots\ldots\\
&\qquad (i=1,2,\ldots,N);
\end{aligned}\right\} \tag{61.22}$$

$$\tau^i_{\theta z} = \frac{\vartheta r}{a^i_{44}} = \frac{M}{C}\frac{r}{a^i_{44}}, \tag{61.23}$$

$$C = \frac{\pi}{4}\sum_{i=1}^{N}\frac{a_i^4 - a_{i-1}^4}{a^i_{44}} = \sum_{i=1}^{N} C_i \tag{61.24}$$

(C_i is the rigidity of the ith layer).

In these cases, too, the anisotropy does not affect the rigidity or stresses; they are the same as in an isotropic multilayered bar with shear moduli $G^i = 1/a^i_{44}$. The stress along a radius varies discontinuously across the interfaces, as is shown in Fig. 92 for a three-layered bar with $G^2 < G^1 < G^3$.

EQUILIBRIUM OF AN ANISOTROPIC CANTILEVER UNDER A BENDING LOAD OF THE SIMPLEST TYPE

Chapter 7

The present chapter is concerned with the elastic equilibrium of a cantilever fixed at one end and deformed by a force applied at the other end. If there is some kind of elastic symmetry, in particular for an orthotropic body, the elastic equilibrium is of the same type as for an isotropic body, and the deformations qualitatively differ very little from those in an isotropic body. If, however, the elastic symmetry is not well developed or there is no elastic symmetry at all, the deformation and the corresponding state of stress become considerably more complicated. We begin with the study of this state of stress.

62. Generalized Bending of a Homogeneous Cantilever under a Transverse Force

We formulate the problem as follows. There is a cylindrical or prismatic body, homogeneous and rectilinearly anisotropic, in which the planes of elastic symmetry at different points, if any, are not coincident with the planes of the cross sections. One end of the body is rigidly fixed, and the other is acted on by forces reducing to a force P applied in the end plane. It is assumed that the regions of the ends are finite and that the direction of the force coincides with the direction of one of the principal axes of inertia of the section. The lateral surface is not loaded or fixed; body forces are absent.

Let the centroid of the free end be taken as the origin of co-ordinates, with the z axis directed parallel to the generators, and the x and y axes in the end plane along the principal axes of inertia of the section (Fig. 93). The state of stress in an isotropic body loaded and fixed as indicated is characterized by the fact that at the cross sections $z = z_0$

($0 < z_0 \leqslant l$, where l is the length of the body) there are normal stresses

$$-\frac{P}{I} zy, \tag{62.1}$$

proportional to the bending moment, $-Pz$ (in the conventional understanding of strength of materials), and inversely proportional to the moment of inertia $I = I_x$, which vary across the depth according to a linear law, and shearing stresses τ_{xz}, τ_{yz}; at longitudinal sections $x = x_0$ and $y = y_0$ there are only shearing stresses. The same type of state

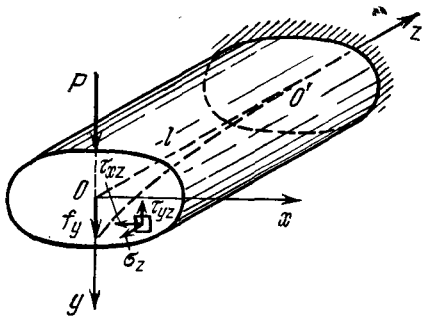

Fig. 93

of stress occurs in a body with well developed elastic symmetry when there are planes of elastic symmetry coinciding with the planes of the cross sections; the elastic equilibrium in these cases is described as bending by a transverse force.

If, however, the planes of elastic symmetry, if any, are not coincident with the planes of the cross sections, the distribution of stress and strain becomes much more complicated and resembles that in generalized plane strain. In this case the state of stress and strain in a body will be described, not as bending, but as *generalized bending* by a transverse force. The body itself will further be referred to as a cantilever. The problem of generalized bending was first formulated by Voigt [38]; it is studied in greater detail in the author's paper [80] (see also the author's book [26]).

Let us derive the general equations for the generalized bending of a homogeneous cantilever. Since in bending by a transverse force the normal stress on the cross sections

is determined by formula (62.1), we assume that in generalized bending

$$\sigma_z = -\frac{P}{I} zy + \sigma_z^0(x, y), \tag{62.2}$$

and all other stress components are not zero and are indedendent of z. The fundamental system of equations becomes

$$\left.\begin{aligned} &\frac{\partial \sigma_x}{\partial x} + \frac{\partial \tau_{xy}}{\partial y} = 0, \quad \frac{\partial \tau_{xy}}{\partial x} + \frac{\partial \sigma_y}{\partial y} = 0, \\ &\frac{\partial \tau_{xz}}{\partial x} + \frac{\partial \tau_{yz}}{\partial y} = \frac{P}{I} y; \end{aligned}\right\} \tag{62.3}$$

$$\left.\begin{aligned} \varepsilon_x &= a_{11}\sigma_x + a_{12}\sigma_y + \ldots + a_{16}\tau_{xy} - \frac{P}{I} a_{13} zy, \\ \varepsilon_y &= a_{12}\sigma_x + a_{22}\sigma_y + \ldots + a_{26}\tau_{xy} - \frac{P}{I} a_{23} zy, \\ &\ldots\ldots\ldots\ldots\ldots\ldots\ldots\ldots \\ \gamma_{xy} &= a_{16}\sigma_x + a_{26}\sigma_y + \ldots + a_{66}\tau_{xy} - \frac{P}{I} a_{36} zy. \end{aligned}\right\} \tag{62.4}$$

We introduce the new notation:

$$D = a_{13}\sigma_x + a_{23}\sigma_y + a_{33}\sigma_z^0 + a_{24}\tau_{yz} + a_{35}\tau_{xz} + a_{36}\tau_{xy}. \tag{62.5}$$

It follows that

$$\sigma_z^0 = \frac{D}{a_{23}} - \frac{1}{a_{33}} (a_{13}\sigma_x + a_{23}\sigma_y + a_{34}\tau_{yz} + \\ + a_{35}\tau_{xz} + a_{36}\tau_{xy}). \tag{62.6}$$

The generalized Hooke's law equations are rewritten as

$$\left.\begin{aligned} \varepsilon_x &= \beta_{11}\sigma_x + \beta_{12}\sigma_y + \beta_{14}\tau_{yz} + \beta_{15}\tau_{xz} + \\ &\qquad + \beta_{16}\tau_{xy} + \frac{a_{13}}{a_{33}} D - \frac{P}{I} a_{13} zy, \\ \varepsilon_y &= \beta_{12}\sigma_x + \beta_{22}\sigma_y + \ldots \\ &\qquad \ldots + \beta_{26}\tau_{xy} + \frac{a_{23}}{a_{33}} D - \frac{P}{I} a_{23} zy, \\ &\ldots\ldots\ldots\ldots\ldots\ldots\ldots\ldots \\ \gamma_{xy} &= \beta_{16}\sigma_x + \beta_{26}\sigma_y + \ldots \\ &\qquad \ldots + \beta_{66}\tau_{xy} + \frac{a_{36}}{a_{33}} D - \frac{P}{I} a_{36} zy. \end{aligned}\right\}$$

From the third, fourth, fifth equations of (62.7) we determine the displacements w, v, u (to within the functions W, V, U), and then satisfy the remaining equations. As a result, we obtain equations and formulas resembling those for the case when the stresses in a body are independent of z, with added polynomials proportional to the force P. The final expressions for D, σ_z, and displacements are of the form

$$D = Ax + By + C - \frac{P}{2I}(a_{35}xy + a_{34}y^2); \tag{62.8}$$

$$\sigma_z = -\frac{P}{I}zy + \frac{1}{a_{33}}(Ax + By + C) - \frac{P}{2Ia_{33}}(a_{35}xy + a_{34}y^2) -$$

$$-\frac{1}{a_{33}}(a_{13}\sigma_x + a_{23}\sigma_y + a_{34}\tau_{yz} + a_{35}\tau_{xz} + a_{36}\tau_{xy}), \tag{62.9}$$

$$\left.\begin{aligned} u &= -\frac{P}{2I}\left(2a_{13}xyz + a_{36}y^2z + \frac{a_{35}}{2}yz^2\right) - \\ &\qquad -\frac{A}{2}z^2 - \vartheta yz + U + u', \\ v &= \frac{Pa_{33}}{6I}z^3 + \frac{P}{2I}\left[(a_{13}x^2 - a_{23}y^2)z + \frac{a_{35}}{2}xz^2\right] - \\ &\qquad -\frac{B}{2}z^2 + \vartheta xz + V + v', \\ w &= -\frac{P}{2I}(a_{33}yz^2 + a_{35}xyz + a_{34}y^2z) + \\ &\qquad + (Ax + By + C)z + W + w'. \end{aligned}\right\} \tag{62.10}$$

Here u', v', w' are rigid-body displacements (18.8) containing six constants, ω_1, ω_2, ω_3, u_0, v_0, w_0 (they are found from the conditions at the fixed end), A, B, C, ϑ are constants to be determined from the equilibrium conditions for a part of the cantilever, U, V, W are functions satisfying five

equations:

$$\left.\begin{aligned}
\frac{\partial U}{\partial x} &= \beta_{11}\sigma_x + \beta_{12}\sigma_y + \beta_{14}\tau_{yz} + \beta_{15}\tau_{xz} + \beta_{16}\tau_{xy} + \\
&\quad + \frac{a_{13}}{a_{33}}(Ax + By + C) - \frac{Pa_{13}}{2Ia_{33}}(a_{35}xy + a_{34}y^2), \\
\frac{\partial V}{\partial y} &= \beta_{12}\sigma_x + \beta_{22}\sigma_y + \ldots + \beta_{26}\tau_{xy} + \\
&\quad + \frac{a_{23}}{a_{33}}(Ax + By + C) - \frac{Pa_{23}}{2Ia_{33}}(a_{35}xy + a_{34}y^2), \\
\frac{\partial U}{\partial y} + \frac{\partial V}{\partial x} &= \beta_{16}\sigma_x + \beta_{26}\sigma_y + \ldots + \beta_{66}\tau_{xy} + \\
&\quad + \frac{a_{26}}{a_{33}}(Ax + By + C) - \frac{Pa_{36}}{2Ia_{33}}(a_{35}xy + a_{34}y^2);
\end{aligned}\right\} \tag{62.11}$$

$$\left.\begin{aligned}
\frac{\partial W}{\partial x} &= \beta_{15}\sigma_x + \beta_{25}\sigma_y + \beta_{45}\tau_{yz} + \beta_{55}\tau_{xz} + \beta_{56}\tau_{xy} + \\
&\quad + \frac{a_{35}}{a_{33}}(Ax + By + C) - \frac{Pa_{35}}{2Ia_{33}}(a_{35}xy + a_{34}y^2) + \\
&\qquad + \frac{P}{2I}(2a_{13}xy + a_{36}y^2) + \vartheta y, \\
\frac{\partial W}{\partial y} &= \beta_{14}\sigma_x + \beta_{24}\sigma_y + \ldots + \beta_{46}\tau_{xy} + \\
&\quad + \frac{a_{34}}{a_{33}}(Ax + By + C) - \frac{Pa_{34}}{2Ia_{33}}(a_{35}xy + a_{34}y^2) + \\
&\qquad + \frac{P}{2I}(a_{23}y^2 - a_{13}x^2) - \vartheta x.
\end{aligned}\right\} \tag{62.12}$$

Here

$$\beta_{ij} = a_{ij} - \frac{a_{i3}a_{j3}}{a_{33}} \qquad (i, j = 1, 2, 4, 5, 6). \tag{18.16}$$

The equilibrium equations for a continuous medium (62.3) are satisfied by means of two stress functions, F and ψ, assuming

$$\left.\begin{aligned}
&\sigma_x = \frac{\partial^2 F}{\partial y^2}, \quad \sigma_y = \frac{\partial^2 F}{\partial x^2}, \quad \tau_{xy} = -\frac{\partial^2 F}{\partial x\,\partial y}, \\
&\tau_{xz} = \frac{\partial \psi}{\partial y} + \tau_1, \quad \tau_{yz} = -\frac{\partial \psi}{\partial x} + \tau_2,
\end{aligned}\right\} \tag{62.13}$$

where τ_1, τ_2 is a particular solution of the third equation of (62.3). By eliminating U and V from (62.11) by double

differentiation and W from (62.12) by differentiation with respect to x and y, we come to the conclusion that F and ψ satisfy the non-homogeneous system of equations

$$\left.\begin{aligned} L_4F+L_3\psi &= \frac{P}{2Ia_{33}}(2a_{13}a_{34}-a_{35}a_{36})- \\ &-\frac{\partial^2}{\partial y^2}(\beta_{14}\tau_2+\beta_{15}\tau_1)-\frac{\partial^2}{\partial x^2}(\beta_{24}\tau_2+\beta_{25}\tau_1)+ \\ &+\frac{\partial^2}{\partial x\,\partial y}(\beta_{46}\tau_2+\beta_{56}\tau_1), \\ L_3F+L_2\psi &= \frac{P}{2Ia_{33}}[(a_{35}^2-4a_{13}a_{33})\,x+ \\ &+(a_{34}a_{35}-2a_{33}a_{36})\,y]-2\vartheta+\frac{Aa_{34}-Ba_{35}}{a_{33}}+ \\ &+\frac{\partial}{\partial x}(\beta_{44}\tau_2+\beta_{45}\tau_1)-\frac{\partial}{\partial y}(\beta_{45}\tau_2+\beta_{55}\tau_1). \end{aligned}\right\} \quad (62.14)$$

Here L_4, L_3, L_2 are operators (19.3).

The conditions on the lateral surface, which is not loaded, or, what is the same thing, on the contour of the cross section, are simplified to

$$\frac{\partial F}{\partial x}=c_1, \quad \frac{\partial F}{\partial y}=c_2, \quad \psi=\int_0^s(\tau_2\,dx-\tau_1\,dy)+c_3. \quad (62.15)$$

If the region of the section is simply connected, we may set $c_1=0$, $c_2=0$ on the contour. The third condition of (62.15) is simplified if the particular solutions τ_1, τ_2 can be chosen so as to make the expression $\tau_2dx-\tau_1dy$ zero on the contour. The third condition of (62.15) is then written as $\psi=c_3$ or, in the case of a simply connected region of the section, $\psi=0$.

The stresses on the cross sections must satisfy the equilibrium conditions

$$\left.\begin{aligned} &\iint\tau_{xz}\,dx\,dy=0, && \iint\sigma_z y\,dx\,dy=-Pz, \\ &\iint\tau_{yz}\,dx\,dy=-P, && \iint\sigma_z x\,dx\,dy=0, \\ &\iint\sigma_z\,dx\,dy=0, && \iint(\tau_{yz}x-\tau_{xz}y)\,dx\,dy=0. \end{aligned}\right\} \quad (62.16)$$

The first two equalities of (62.16) are identities, which can easily be verified by transforming the area integral into a contour integral and using the equilibrium equations for a continuous medium. Indeed,

$$\iint \tau_{xz}\,dx\,dy = \iint \left[\tau_{xz} + x\left(\frac{\partial \tau_{xz}}{\partial x} + \frac{\partial \tau_{yz}}{\partial y} - \frac{P}{I}\,y\right)\right] dx\,dy =$$

$$= \iint \left[\frac{\partial (x\tau_{xz})}{\partial x} + \frac{\partial (x\tau_{yz})}{\partial y} - \frac{P}{I}\,xy\right] dx\,dy =$$

$$= \int_{\gamma} x\,[\tau_{xz}\cos(n, x) + \tau_{yz}\cos(n, y)]\,ds -$$

$$- \frac{P}{I}\iint xy\,dx\,dy = 0 \qquad (62.17)$$

(since the integral of the product xy is equal to the product of inertia with respect to the principal axes);

$$\iint \tau_{yz}\,dx\,dy = \iint \left[\frac{\partial (y\tau_{xz})}{\partial x} + \frac{\partial (y\tau_{yz})}{\partial y} - \frac{P}{I}\,y^2\right] dx\,dy =$$

$$= -\frac{P}{I}\iint y^2\,dx\,dy = -P. \qquad (62.18)$$

The remaining conditions serve to determine the constants A, B, C, ϑ. In the present case $X_n = Y_n = X = Y = 0$; hence, the integral formulas of Sec. 19 are considerably simplified.

From Eqs. (62.16) we find

$$A = B = 0, \quad C = -\frac{P}{2S}\,\frac{a_{34}}{a_{33}} \qquad (62.19)$$

fS is the cross-sectional area). The constant ϑ is determined (rom the sixth equation of (62.16).

Under a transverse force P, a cantilever having general anisotropy undergoes a more complicated deformation than an isotropic cantilever of the same dimensions, namely: (1) to the stresses τ_{xz}, τ_{yz}, σ_z characteristic of bending by a force are added the stresses σ_x, σ_y, τ_{xy} characteristic of plane strain; (2) the cross sections do not remain plane, but, as is seen from the third formula of (62.10), become warped; the warping depends on the function $W(x, y)$; (3) bending is accompanied by twisting. But even in the general case of anisotropy the deflected axis is a plane curve:

$$y' = \frac{Pa_{33}}{6I}\,(2l^3 - 3l^2z + z^3). \qquad (62.20)$$

This equation is identical with the equation of the deflected axis of an isotropic cantilever whose rigidity is $I/a_{33} = E_3 I$, where E_3 is Young's modulus for tension or compression along the z axis. The formula of the elementary theory of bending relating the curvature of the deflected axis $1/\rho$ and the bending moment appears to be true also in this case:

$$\frac{1}{\rho} = -\frac{Pz}{E_3 I} = \frac{M}{E_3 I}. \tag{62.21}$$

63. General Expressions for Stress Functions, Stress Components, and Projections of Displacement. Boundary Conditions

The system of equations for the functions F and ψ (62.14) differs from system (19.2) in Chap. 3 only in the right-hand sides. It is clear that this makes it possible to write the general expressions for the derivatives of F and for ψ, for the components of stress and the projections of displacement in terms of three functions of the complex variables $z_k = x + \mu_k y$ $(k = 1, 2, 3)$, where $\mu_k = \alpha_k + i\beta_k$ are the roots of the algebraic equation (see Sec. 20)

$$l_4(\mu)\, l_2(\mu) - l_3^2(\mu) = 0. \tag{63.1}$$

By using, further, the notation of Sec. 20, we have, in the case of distinct roots $\mu_1, \mu_2, \mu_3, \bar{\mu}_1, \bar{\mu}_2, \bar{\mu}_3$ of Eq. (63.1),

$$\left.\begin{aligned}
\frac{\partial F}{\partial x} &= 2\,\mathrm{Re}\,[\Phi_1(z_1) + \Phi_2(z_2) + \lambda_3\Phi_3(z_3)] + \frac{\partial F_0}{\partial x},\\
\frac{\partial F}{\partial y} &= 2\,\mathrm{Re}\,[\mu_1\Phi_1 + \mu_2\Phi_2 + \mu_3\lambda_3\Phi_3] + \frac{\partial F_0}{\partial y},\\
\psi &= 2\,\mathrm{Re}\,[\lambda_1\Phi_1 + \lambda_2\Phi_2 + \Phi_3] + \psi_0;
\end{aligned}\right\} \tag{63.2}$$

$$\left.\begin{aligned}
\sigma_x &= 2\,\mathrm{Re}\,[\mu_1^2\Phi_1'(z_1) + \mu_2^2\Phi_2'(z_2) + \mu_3^2\lambda_3\Phi_3'(z_3)] + \frac{\partial^2 F_0}{\partial y^2},\\
\sigma_y &= 2\,\mathrm{Re}\,[\Phi_1' + \Phi_2' + \lambda_3\Phi_3'] + \frac{\partial^2 F_0}{\partial x^2},\\
\tau_{xy} &= -2\,\mathrm{Re}\,[\mu_1\Phi_1' + \mu_2\Phi_2' + \mu_3\lambda_3\Phi_3'] - \frac{\partial^2 F_0}{\partial x\,\partial y},\\
\tau_{xz} &= 2\,\mathrm{Re}\,[\mu_1\lambda_1\Phi_1' + \mu_2\lambda_2\Phi_2' + \mu_3\Phi_3'] + \frac{\partial\psi_0}{\partial y} + \tau_1,\\
\tau_{yz} &= -2\,\mathrm{Re}\,[\lambda_1\Phi_1' + \lambda_2\Phi_2' + \Phi_3'] - \frac{\partial\psi_0}{\partial x} + \tau_2;
\end{aligned}\right\} \tag{63.3}$$

$$\left.\begin{aligned} U &= 2\,\mathrm{Re}\sum_{k=1}^{3} p_k\Phi_k(z_k) + U_0, \\ V &= 2\,\mathrm{Re}\sum_{k=1}^{3} q_k\Phi_k + V_0, \\ W &= 2\,\mathrm{Re}\sum_{k=1}^{3} r_k\Phi_k + W_0. \end{aligned}\right\} \tag{63.4}$$

Here F_0, ψ_0 is a particular solution of the system of equations (62.14), where we must set $A = B = 0$ [see (62.10)], U, V, W are parts of the displacements u, v, w depending only on x and y; U_0, V_0, W_0 are particular solutions of Eqs. (62.11) and (62.12). All these functions (particular solutions) will contain terms proportional to the twist ϑ and terms proportional to the force P.

The complex potentials Φ_k satisfy boundary conditions of the same form as in the case of generalized plane strain or generalized torsion; the only difference is in the right-hand sides:

$$\left.\begin{aligned} 2\,\mathrm{Re}\,[\Phi_1 + \Phi_2 + \lambda_3\Phi_3] &= c_1 - \frac{\partial F_0}{\partial x}, \\ 2\,\mathrm{Re}\,[\mu_1\Phi_1 + \mu_2\Phi_2 + \mu_3\lambda_3\Phi_3] &= c_2 - \frac{\partial F_0}{\partial y}, \\ 2\,\mathrm{Re}\,[\lambda_1\Phi_1 + \lambda_2\Phi_2 + \Phi_3] &= \\ &= c_3 - \psi_0 + \int_0^s (\tau_2\,dx - \tau_1\,dy). \end{aligned}\right\} \tag{63.5}$$

Thus, in the general case of anisotropy the problem of the generalized bending of a cantilever by a transverse force is as difficult as those of generalized plane strain and generalized torsion. Hence, the three problems of the equilibrium of a body bounded by a cylindrical surface, so different for an isotropic body, reduce, for a body with general anisotropy, to the same mathematical problem, namely to the boundary value problem for three functions $\Phi_k(z_k)$ of three different complex variables (complex potentials), which must be holomorphic and single valued in their regions S_k (see [80]).

The particular solutions τ_1, τ_2 may be chosen in different ways.

Thus, for a symmetrical section bounded by the curves

$$y = \pm \sqrt{f(x)}, \tag{63.6}$$

or by these curves and one or two straight lines parallel to the y axis, we may assume

$$\tau_1 = 0, \quad \tau_2 = \frac{P}{2I}[y^2 - f(x)]. \tag{63.7}$$

On the contour of the section we then have $\tau_2 dx - \tau_1 dy = 0$. Equations (62.14) become

$$\left.\begin{aligned} L_4 F + L_3 \psi &= \frac{P}{I}[g_1 + 0.5\beta_{24} f''(x)], \\ L_3 F + L_2 \psi &= \frac{P}{I}[g_2 x + g_3 y - 0.5\beta_{44} f'(x)] - 2\vartheta \end{aligned}\right\} \tag{63.8}$$

where

$$\left.\begin{aligned} g_1 &= \frac{2a_{13}a_{34}}{a_{33}} - \frac{a_{35}a_{36}}{2a_{33}} - a_{14}, \quad g_2 = \frac{a_{35}^2}{2a_{33}} - 2a_{13}, \\ g_3 &= \frac{3a_{34}a_{35}}{2a_{33}} - a_{36} - a_{45}. \end{aligned}\right\} \tag{63.9}$$

The function ψ must vanish on the contour.

On determining the functions F and ψ satisfying Eqs. (62.14) and the boundary conditions, we obtain the following expressions for them:

$$F = \frac{P}{I} F_1(x, y) + \vartheta F_0(x, y), \quad \psi = \frac{P}{I} \psi_1(x, y) + \vartheta \psi_0(x, y). \tag{63.10}$$

The last stage in the solution of the problem of generalized bending by a transverse force is the determination of the constant ϑ, which is found from the sixth equilibrium condition of (62.16).

64. Bending of a Homogeneous Rectilinearly Anisotropic Cantilever by a Transverse Force

If the plane of the cross section of a cantilever is a plane of elastic symmetry, the problem of bending by a transverse force is considerably simplified. The picture of the state

of stress and strain is also greatly simplified and is virtually very little different from that in an isotropic cantilever; all general equations and the methods of solution are also simplified. In contrast to a cantilever with general anisotropy, the state of stress and strain in this special case may be described as bending of a cantilever by a transverse force or simple bending by a transverse force. The problem of the bending of an isotropic cantilever and of a cantilever having anisotropy of a special kind was studied by Saint-Venant [111]. Further investigations of this subject may be found in [23] and [25] and in other works.

In the present case a number of constants (strain coefficients a_{ij}) are zero:

$$a_{14} = a_{24} = a_{34} = a_{46} = 0, \qquad a_{15} = a_{25} = a_{35} = a_{56} = 0. \tag{64.1}$$

Equations (62.10), (62.11), and (62.14) are all satisfied by setting $U = F = V = 0$, $C = 0$,

$$\sigma_x = \sigma_y = \tau_{xy} = \sigma_z^0 = 0. \tag{64.2}$$

We obtain

$$\sigma_z = -\frac{P}{I} zy, \tag{64.3}$$

$$\tau_{xz} = \frac{\partial\psi}{\partial y} + \tau_1, \quad \tau_{yz} = -\frac{\partial\psi}{\partial x} + \tau_2, \tag{64.4}$$

where, as before, τ_1, τ_2 is a particular solution of the equilibrium equation for a continuous medium

$$\frac{\partial\tau_{xz}}{\partial x} + \frac{\partial\tau_{yz}}{\partial y} - \frac{P}{I} y = 0, \tag{64.5}$$

which may be taken in the form of (63.7) or in an alternate form, depending on the shape of the section. The function ψ will be termed the *stress function in bending (by a transverse force)*.

The remaining condition to be fulfilled on the contour of the cross section is the third of (62.15):

$$\psi = \int^{s} (\tau_2\, dx - \tau_1\, dy) + c_3 \tag{64.6}$$

(in the case of a simply connected region of the section we may set $c_3 = 0$). In addition, the conditions to be fulfilled at the ends reduce to a single one:

$$\int\int (\tau_{yz}x - \tau_{xz}y)\, dx\, dy = 0; \tag{64.7}$$

which will serve to determine the constant ϑ (twist).

The displacements satisfy the conditions at the fixed end, where we agree to consider a line element passing through the centroid as stationary. These conditions are of the form: when $x = y = 0$ and $z = l$,

$$u = v = w = 0, \quad \frac{\partial u}{\partial z} = \frac{\partial v}{\partial z} = \frac{\partial v}{\partial x} - \frac{\partial u}{\partial y} = 0. \tag{64.8}$$

On satisfying these conditions, we obtain

$$\left.\begin{aligned} u &= -\frac{P}{I}(a_{13}xy + 0.5a_{36}y^2)\, z + \vartheta (l - z)\, y, \\ v &= \frac{P}{I}\left[\frac{a_{33}}{6}(2l^3 - 3l^2 z + z^3) + \frac{1}{2}(a_{13}x^2 - a_{23}y^2)\, z\right] - \\ &\qquad - \vartheta (l - z)\, x, \\ w &= \frac{P}{2I} a_{33}(l^2 - z^2)\, y + W - (W)_0. \end{aligned}\right\} \tag{64.9}$$

The function $W(x, y)$ is determined from the equations

$$\left.\begin{aligned} \frac{\partial W}{\partial x} &= a_{45}\tau_{yz} + a_{55}\tau_{xz} + \frac{P}{I}(a_{13}xy + 0.5a_{36}y^2) + \vartheta y, \\ \frac{\partial W}{\partial y} &= a_{44}\tau_{yz} + a_{45}\tau_{xz} + \frac{P}{2I}(a_{23}y^2 - a_{13}x^2) - \vartheta x. \end{aligned}\right\} \tag{64.10}$$

From this and (64.4) we obtain an equation for ψ:

$$a_{44}\frac{\partial^2\psi}{\partial x^2} - 2a_{45}\frac{\partial^2\psi}{\partial x\, \partial y} + a_{55}\frac{\partial^2\psi}{\partial y^2} = -\frac{P}{I}(2a_{13}x + a_{36}y) -$$
$$- 2\vartheta + \frac{\partial}{\partial x}(a_{44}\tau_2 + a_{45}\tau_1) - \frac{\partial}{\partial y}(a_{45}\tau_2 + a_{55}\tau_1). \tag{64.11}$$

In this case ψ, τ_{xz}, τ_{yz}, and W are expressed in terms of the single function $\Phi_3(z_3)$ of the complex variable $z_3 = x + \mu_3 y$, where $\mu_3 = \alpha_3 + i\beta_3$ and its complex conjugate $\bar{\mu}_3 = \alpha_3 - i\beta_3$ are the roots of the equation

$$l_2(\mu) \equiv a_{55}\mu^2 - 2a_{45}\mu + a_{44} = 0, \tag{64.12}$$

which are always complex or pure imaginary (see Sec. 20). From the third formula of (63.2) in which $\lambda_1 = \lambda_2 = 0$ in this case it follows that

$$\psi = 2\mathrm{Re}\,[\Phi_3(z_3)] + \psi_0, \tag{64.13}$$

where ψ_0 is a particular solution of Eq. (64.11). The expressions for the stresses are of the form [see (64.4)]

$$\left.\begin{aligned} \tau_{xz} &= 2\,\mathrm{Re}\,[\mu_3\Phi_3'(z_3)] + \frac{\partial\psi_0}{\partial y} + \tau_1, \\ \tau_{yz} &= -2\,\mathrm{Re}\,[\Phi_3'] - \frac{\partial\psi_0}{\partial x} + \tau_2. \end{aligned}\right\} \tag{64.14}$$

The problem is reduced to that of determining the complex potential $\Phi_3(z_3)$ in a region S_3 obtained from the region S of the cross section by the affine transformation

$$x_3 = x + \alpha_3 y, \quad y_3 = \beta_3 y \qquad (z_3 = x_3 + iy_3). \tag{64.15}$$

The condition for Φ_3 on the contour of the region S_3 is written as

$$2\,\mathrm{Re}\,[\Phi_3] = c_3 - \psi_0 + \int_0^s (\tau_2\,dx - \tau_1\,dy). \tag{64.16}$$

Here the basic unknown function is taken to be the stress function in bending ψ. As in the theory of torsion, we could have taken φ as the basic function; we would have obtained a second-order equation for it [not coinciding with (64.11)] and a boundary condition. But this procedure of solution is less convenient, and hence we shall prefer the first one in the following discussion, i.e., we shall deal with the stress function ψ.

The problem is further simplified in the case when the cantilever material is orthotropic or isotropic. In the case of an orthotropic cantilever in which one of the three planes of elastic symmetry coincides with the plane of the cross section and the force acts in the second plane of elastic symmetry (yz) it is more convenient to introduce the engineering elastic constants setting $a_{36} = a_{45} = 0$, $a_{44} = 1/G_1$, $a_{55} = 1/G_2$, $a_{13} = -\nu_{31}/E_3$, $a_{23} = -\nu_{32}/E_3$, and denoting

$$g = \frac{G_2}{G_1}, \quad \bar{e} = \frac{G_2\nu_{31}}{E_3}. \tag{64.17}$$

We then obtain the following equation for ψ instead of (64.11):

$$g\frac{\partial^2\psi}{\partial x^2}+\frac{\partial^2\psi}{\partial y^2}=\frac{P}{I}\left[2\bar{e}x+gf'(x)\right]-2\vartheta. \tag{64.18}$$

The boundary condition is $\psi = 0$. The particular solution τ_1, τ_2 is taken in the form of (63.7). The displacements are determined by the formulas

$$\left.\begin{aligned} u&=\frac{P\nu_{31}}{E_3I}xyz+\vartheta(l-z)y,\\ v&=\frac{P}{E_3I}\left[\frac{1}{6}(2l^3-3l^2z+z^3)+\right.\\ &\qquad\left.+\frac{1}{2}(\nu_{32}y^2-\nu_{31}x^2)z\right]-\vartheta(l-z)x,\\ w&=\frac{P}{2E_3I}(l^2-z^2)y+W-(W)_0. \end{aligned}\right\} \tag{64.19}$$

In some cases of the bending of an orthotropic cantilever (particularly in investigations by approximate methods) it is convenient to break the function W into three terms:

$$W=\vartheta\varphi(x,y)+\Phi(x,y)+\frac{P}{E_3I}\left(\frac{\nu_{31}}{2}x^2y-\frac{\nu_{32}}{6}y^3\right), \tag{64.20}$$

where φ is a function corresponding to torsion (proportional to W in the theory of torsion) and satisfying the equation

$$g\frac{\partial^2\varphi}{\partial x^2}+\frac{\partial^2\varphi}{\partial y^2}=0, \tag{64.21}$$

and Φ is the so-called flexure function*, satisfying the non-homogeneous equation

$$g\frac{\partial^2\Phi}{\partial x^2}+\frac{\partial^2\Phi}{\partial y^2}=\frac{P}{IG_1}(1-2\bar{e})y. \tag{64.22}$$

By introducing the new functions, the general formulas for the stresses may be written as

$$\left.\begin{aligned} \tau_{xz}&=G_2\vartheta\left(\frac{\partial\varphi}{\partial x}-y\right)+G_2\frac{\partial\Phi}{\partial x}+\frac{2P}{I}\frac{G_2\nu_{31}}{E_3}xy,\\ \tau_{yz}&=G_1\vartheta\left(\frac{\partial\varphi}{\partial y}+x\right)+G_1\frac{\partial\Phi}{\partial y}. \end{aligned}\right\} \tag{64.23}$$

* See the book by L. S. Leibenzon [23], p. 283 or [76], where Φ is called a "new flexure function", while Saint-Venant uses another flexure function χ [111].

For an isotropic body

$$\nu_{31}=\nu_{32}=\nu,\quad E_3=E,\quad G_1=G_2=\frac{E}{2(1+\nu)},\quad g=1,$$

and Eqs. (64.18), (64.21), and (64.22) become

$$\nabla^2\psi=\frac{P}{I}\left[\frac{\nu}{1+\nu}x-\frac{f'(x)}{2}\right]-2\vartheta G \tag{64.24}$$

$$\nabla^2\varphi=0, \tag{64.25}$$

$$\nabla^2\Phi=\frac{2P}{EI}y. \tag{64.26}$$

A bending force passing through the centroid of the end and acting in a principal plane not coinciding with a plane of elastic symmetry produces not only bending in the principal plane, but also twisting about the z axis, which is characterized by the constant ϑ. The twisting can be avoided if the force is directed eccentrically in relation to the centroid. For a section of arbitrary shape there is always a point C possessing the following property: every transverse force whose line of action passes through C produces bending in principal planes not accompanied by twisting. This point is known as the centre of flexure ([23], p. 196).*

If the transverse force is directed along an axis of geometrical symmetry coinciding with an axis of elastic symmetry, we may set $\vartheta=0$ beforehand.

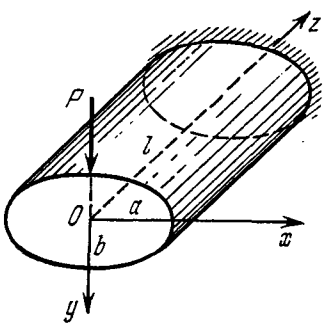

Fig. 94

65. Stress Distribution in a Homogeneous Cantilever of Elliptical or Circular Section

As our first example of the bending of a homogeneous cantilever consider a cantilever of elliptical section. Let a cantilever with a section in the form of an ellipse with semiaxes a, b be bent by a force P directed along one of the principal axes (Fig. 94). The solution for an isotropic

* In [42], [97], [75], [65], [71], [72], [126] the writers investigated the bending of a cantilever by a distributed load.

and an orthotropic cantilever was found by Saint-Venant [111]; we shall consider the most general case of homogeneous material when the number of strain coefficients a_{ij} is 21 (18). One end, $z = l$, is fixed; the other, $z = 0$, is acted on by a force P directed along the y axis. The equation of the contour of the section is of the form

$$\frac{x^2}{a^2} + \frac{y^2}{b^2} = 1. \tag{65.1}$$

To construct the solution, we use the particular solution of Eq. (64.5) in the form of (63.7), where

$$f(x) = b^2 - \frac{b^2}{a^2} x^2. \tag{65.2}$$

The expressions for the stress components in terms of the stress functions F and ψ in the general case of anisotropy are

$$\left.\begin{aligned} &\sigma_x = \frac{\partial^2 F}{\partial y^2}, \quad \sigma_y = \frac{\partial^2 F}{\partial x^2}, \quad \tau_{xy} = -\frac{\partial^2 F}{\partial x\, \partial y}, \\ &\tau_{xz} = \frac{\partial \psi}{\partial y}, \quad \tau_{yz} = -\frac{\partial \psi}{\partial x} + \frac{P}{2I}\left(y^2 + \frac{b^2}{a^2} x^2 - b^2\right), \end{aligned}\right\} \tag{65.3}$$

$$\sigma_z = -\frac{P}{I} zy - \frac{P}{2S} \frac{a_{34}}{a_{33}} - \frac{P}{2Ia_{33}} (a_{35}xy + a_{34}y^2) - \\ - \frac{1}{a_{33}} (a_{13}\sigma_x + a_{23}\sigma_y + a_{34}\tau_{yz} + a_{35}\tau_{xz} + a_{36}\tau_{xy}). \tag{65.4}$$

The system of equations for F and ψ (62.14) is written as

$$\left.\begin{aligned} &L_4 F + L_3 \psi = \frac{P}{I} (g_1 - \beta_{24} c^2), \\ &L_3 F + L_2 \psi = \frac{P}{I} [(g_2 + \beta_{44} c^2) x + g_3 y] - 2\vartheta, \end{aligned}\right\} \tag{65.5}$$

where g_1, g_2, g_3 are coefficients (63.9), and $c = a/b$ is the ratio of the principal semiaxes of the ellipse. Here we may set $\vartheta = 0$ beforehand since Eq. (64.7) is identically satisfied for $\vartheta = 0$.

The boundary conditions for F and ψ are

$$\frac{\partial F}{\partial x} = \frac{\partial F}{\partial y} = \psi = 0. \tag{65.6}$$

These conditions are satisfied by taking elementary functions in the form of polynomials:

$$\left.\begin{aligned} F &= p\left(\frac{x^2}{a^2}+\frac{y^2}{b^2}-1\right)^2, \\ \psi &= q\left(\frac{x^3}{a^2}+\frac{xy^2}{b^2}-x\right)+r\left(\frac{x^2y}{a^2}+\frac{y^3}{b^2}-y\right). \end{aligned}\right\} \tag{65.7}$$

The constants p, q, r are found from the equations

$$\left.\begin{aligned} &\frac{4p}{a^2}\left(\frac{3\beta_{11}}{c^2}+2\beta_{12}+\beta_{66}+3\beta_{22}c^2\right)- \\ &-q\,(3\beta_{24}c^2+\beta_{14}+\beta_{56})+r\,[3\beta_{15}+(\beta_{25}+\beta_{46})\,c^2]= \\ &\qquad\qquad =\frac{2P}{\pi ab}\,(g_1-\beta_{24}c^2), \\ &-\frac{4p}{a^2}\,(3\beta_{24}c^2+\beta_{14}+\beta_{56})+q\,(3\beta_{44}c^2+\beta_{55})- \\ &\qquad\qquad -2r\beta_{45}c^2=\frac{2P}{\pi ab}\,(g_2+\beta_{44}c^2), \\ &\frac{4p}{a^2}\left(\beta_{25}+\beta_{46}+\frac{3\beta_{15}}{c^2}\right)-2q\beta_{45}+r\,(\beta_{44}c^2+3\beta_{55})= \\ &\qquad\qquad =\frac{2P}{\pi ab}\,g_3. \end{aligned}\right\} \tag{65.8}$$

The solution of this elementary system will not be given here; we only note that in the general case of rectilinear anisotropy all six stress components are different from zero and are distributed over the cross-sectional area according to a quadratic law.

For an orthotropic cantilever with planes of elastic symmetry normal to its axis and parallel to the planes of symmetry of the elliptical cylinder, the formulas are simplified since $a_{45}=a_{36}=0$ and $r=0$. We obtain

$$\left.\begin{aligned} \tau_{xz} &= \frac{4P}{\pi ab^3}\,\frac{a_{44}c^2-2a_{13}}{3a_{44}c^2+a_{55}}\,xy, \\ \tau_{yz} &= \frac{2P}{\pi ab}\,\frac{1}{3a_{44}c^2+a_{55}}\left[(a_{55}+6a_{13})\,\frac{x^2}{a^2}-\right. \\ &\qquad\qquad \left.-(2a_{44}c^2+a_{55}+2a_{13})\left(1-\frac{y^2}{b^2}\right)\right]. \end{aligned}\right\} \tag{65.9}$$

The shearing stress attains its maximum value at the centre of the section, where it is equal to

$$\tau_{\max}=\frac{2P}{\pi ab}\,\frac{2a_{44}c^2+a_{55}+2a_{13}}{3a_{44}c^2+a_{55}}=\frac{2P}{\pi ab}\,\frac{1-\dfrac{2\nu_{31}G_2}{E_3}+2c^2g}{1+3c^2g}\,. \qquad (65.10)$$

In particular, for an isotropic cantilever

$$\tau_{\max}=\frac{2P}{\pi ab}\,\frac{1+2(1+\nu)\,c^2}{(1+\nu)(1+3c^2)}\,. \qquad (65.11)$$

The formulas for the stresses in a cantilever of circular section will not be given since they are all obtained from the foregoing by setting $c=1$. As regards the normal stresses σ_z, they reach their numerically greatest values, in cases when the planes of the cross sections are planes of elastic symmetry, at the fixed end (where z is maximum) at points where y has the numerically greatest value (at the ends of the axis of length $2b$ of the fixed end section).

66. Bending of a Homogeneous Orthotropic Cantilever of Rectangular Section

Closely related to the solution of the torsion problem for a homogeneous and orthotropic bar of rectangular section is the solution for the same cantilever bent by a transverse force (Fig. 95). Let axes be arranged as shown in Fig. 95, where the planes of elastic symmetry are normal to the axes x, y, z or parallel to the faces of a rectangular parallelepiped. The solution of this problem was also obtained by Saint-Venant in [111]; we shall derive it by the method previously applied to solve the corresponding torsion problem (Sec. 56). By expressing the stresses in terms of the stress function [formulas (64.4)], a particular solution

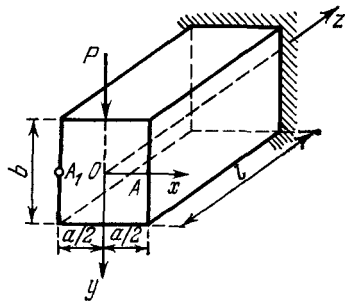

Fig. 95

of Eq. (64.5) is taken in the form

$$\tau_1 = 0, \quad \tau_2 = -\frac{P}{2I}\left(\frac{b^2}{4} - y^2\right). \tag{66.1}$$

These stresses vanish on the sides $y = \pm b/2$; on the other two sides, $x = \pm a/2$, we have $dx = 0$. The stress formulas become

$$\tau_{xz} = \frac{\partial\psi}{\partial y}, \quad \tau_{yz} = -\frac{\partial\psi}{\partial x} - \frac{P}{2I}\left(\frac{b^2}{4} - y^2\right). \tag{66.2}$$

where $I = ab^3/12$, and the equation for ψ is

$$g\frac{\partial^2\psi}{\partial x^2} + \frac{\partial^2\psi}{\partial y^2} = \frac{2P}{I}\bar{e}x, \tag{66.3}$$

since the constant ϑ can at once be taken equal to zero. The problem is reduced to that of determining the stress function ψ, which vanishes on all four sides of the rectangle, $x = \pm a/2$, $y = \pm b/2$.

We expand the right-hand side of Eq. (66.3) in a Fourier series in the interval $(-a/2, a/2)$; the series will contain only the sines, and Eq. (66.3) is rewritten as

$$g\frac{\partial^2\psi}{\partial x^2} + \frac{\partial^2\psi}{\partial y^2} = -\frac{2Pa}{\pi I}\bar{e}\sum_{m=1}^{\infty}\frac{(-1)^m}{m}\sin\frac{2m\pi x}{a} \tag{66.4}$$

$$(g = G_2/G_1, \quad \bar{e} = G_2\nu_{31}/E_3).$$

The solution is sought in the form of a series satisfying the conditions on the two sides $x = \pm a/2$:

$$\psi = \sum_{m=1}^{\infty} Y_m(y)\sin\frac{2m\pi x}{a}. \tag{66.5}$$

Substituting for ψ in (66.4), we obtain an ordinary equation for Y_m

$$Y_m'' - g\left(\frac{2m\pi}{a}\right)^2 Y_m = -\frac{2Pa}{\pi I}\bar{e}\frac{(-1)^m}{m}, \tag{66.6}$$

whose general integral is

$$Y_m = A_m\cosh\frac{2m\pi\mu}{a}y + B_m\sinh\frac{2m\pi\mu}{a}y + \\ + \frac{Pa^3}{2\pi^3 I}\frac{\bar{e}}{g}\frac{(-1)^m}{m^3}, \tag{66.7}$$

where

$$\mu = \sqrt{\frac{G_2}{G_1}} = \sqrt{g}. \tag{66.8}$$

The arbitrary constants are determined from the conditions on the sides $y = \pm b/2$ by requiring that the stress function should be zero there. The result is

$$\psi = \frac{Pa^3}{2\pi^3 I}\frac{\bar{e}}{g}\sum_{m=1}^{\infty}\frac{(-1)^m}{m^3}\left(1 - \frac{\cosh\frac{2m\pi\mu}{a}y}{\cosh\frac{m\pi}{d}}\right)\sin\frac{2m\pi}{a}x; \tag{66.9}$$

$$\left.\begin{aligned}
\tau_{xz} &= -\frac{Pa^2}{\pi^2 I}\frac{\bar{e}}{\mu}\sum_{m=1}^{\infty}\frac{(-1)^m}{m^2}\times \\
&\qquad\times\frac{\sinh\frac{2m\pi\mu}{a}y}{\cosh\frac{m\pi}{d}}\sin\frac{2m\pi}{a}x, \\
\tau_{yz} &= -\frac{P}{2I}\left(\frac{b^2}{4} - y^2\right) - \\
&\quad -\frac{Pa^2}{\pi^2 I}\frac{\bar{e}}{g}\sum_{m=1}^{\infty}\frac{(-1)^m}{m^2}\left(1 - \frac{\cosh\frac{2m\pi\mu}{a}y}{\cosh\frac{m\pi}{d}}\right)\times \\
&\qquad\times\cos\frac{2m\pi}{a}x, \\
&\left(d = \frac{c}{\sqrt{g}} = \frac{c}{\mu}\right).
\end{aligned}\right\} \tag{66.10}$$

The shearing stresses at the centre of the section $x = 0$, $y = 0$ and at the middle points A and A_1 of the sides parallel to the force ($x = \pm a/2$, $y = 0$) are determined by the formulas: at the centre

$$\tau_{xz} = 0, \quad \tau_{yz} = -\frac{3}{2}\frac{P}{ab}\left(1 - \frac{\pi^2\bar{e}}{2}\beta_0\right), \tag{66.11}$$

at the points A and A_1

$$\tau_{xz} = 0, \quad \tau_{yz} = -\frac{3}{2}\frac{P}{ab}\left(1 + \frac{\pi^2\bar{e}}{2}\beta_A\right). \tag{66.12}$$

The factors β_0 and β_A are functions of the ratio

$$d = \frac{c}{\sqrt{g}} = \frac{c}{\mu}, \tag{66.13}$$

defined by the series

$$\left.\begin{aligned} \beta_0 &= d^2\left[\frac{\pi^2}{12} + \sum_{m=1}^{\infty} \frac{(-1)^m}{m^2 \cosh \frac{m\pi}{d}}\right], \\ \beta_A &= d^2\left[\frac{\pi^2}{6} - \sum_{m=1}^{\infty} \frac{1}{m^2 \cosh \frac{m\pi}{d}}\right]. \end{aligned}\right\} \tag{66.14}$$

The values of the factors β_0 and β_A for four ratios d obtained by making use of Saint-Venant's calculations are given in Table 22.

The Factors β_0 and β_A Table 22

d	β_0	β_A	d	β_0	β_A
2	0.09	0.17	0.5	0.72	1.98
1	0.30	0.63	0.25	0.98	4.94

The maximum shearing stress occurs at the points and A_1.

By the elementary bending theory, the shearing stress does not vary across the width of the section and is maximum on the axis of symmetry normal to the line of action of the force:

$$\bar{\tau}_{\max} = \frac{3}{2}\frac{P}{ab}. \tag{66.15}$$

Formula (66.12), together with (66.14), gives a correction factor by which $\bar{\tau}_{\max}$ must be multiplied to obtain the maximum shearing stress $\tau_{\max}$ in an orthotropic cantilever. For large d, the factors β_0 and β_A are small and $\tau_{\max}$ is numerically close to the stress obtained by the elementary theory (as in a cantilever with a section in the form of a

narrow rectangle). The correction factors increase with decreasing d, and when d is small τ_{max} differs appreciably from $\bar{\tau}_{max}$, but in these cases the shearing stresses play a secondary part since their magnitude is small compared with the maximum normal stress σ_{max}. Small ratios d correspond to the cases of an isotropic cantilever bent by forces normal to the longer sides of the rectangle.

67. Approximate Methods for Solving the Problem of the Bending of a Cantilever by a Transverse Force

The equations of the theory of bending by a transverse force are similar to those of the theory of torsion, and so methods similar to those described in Sec. 56 may be applied to find approximate solutions of bending problems. We shall briefly discuss the variational methods by considering only the special case when a cylinder bent by a force P is homogeneous, rectilinearly anisotropic and orthotropic, and is bent without twisting (we may set $\vartheta = 0$ beforehand).

Depending on the particular function (ψ or Φ) taken as the basic one, we may use methods following from Castigliano's variational formula or Lagrange's variational equation (see Chap. 1, Sec. 11). We state, without derivation, the basic general results.*

Let a section be bounded by the curves

$$y = \pm\sqrt{f(x)}, \tag{67.1}$$

or by these curves and by one or two straight lines parallel to the y axis. By taking the stress function ψ as the basic unknown, we have (see Sec. 64)

$$\tau_{xz} = \frac{\partial\psi}{\partial y}, \quad \tau_{yz} = -\frac{\partial\psi}{\partial x} + \frac{P}{2I}[y^2 - f(x)]. \tag{67.2}$$

The function ψ satisfies Eq. (64.18) and must be zero on the contour. The problem is equivalent to that of finding

* The derivation may be found in [23], [25] Chap. XII, and [26].

a function giving a minimum value to the integral

$$U_1 = \int\int \left\{ \frac{1}{G_1}\left(\frac{\partial\psi}{\partial x}\right)^2 + \frac{1}{G_2}\left(\frac{\partial\psi}{\partial y}\right)^2 - \right.$$

$$\left. - \frac{P}{G_1 I}[y^2 - f(x)]\frac{\partial\psi}{\partial x} - 4\left(\vartheta - \frac{P\nu_{31}}{E_2 I}\right)\psi \right\} dx\,dy \qquad (67.3)$$

(with $\psi = 0$ on the contour). In solving the problem approximately, we assign a family of functions $\psi_{mn}(x, y)$ depending on two integral parameters, m and n, and vanishing on the contour. The approximate solution is sought in the form of a sum:

$$\psi = \sum_{m=1}^{M}\sum_{n=1}^{N} A_{mn}\psi_{mn}. \qquad (67.4)$$

Substituting (67.4) in (67.3), we obtain U_1 as a quadratic function of the coefficients A_{mn}. Next, we seek a minimum of U_1 and obtain a system of first-order non-homogeneous equations for A_{mn}:

$$\frac{\partial U_1}{\partial A_{mn}} = 0 \quad (m = 1, 2, \ldots, M;\ n = 1, 2, \ldots, N). \qquad (67.5)$$

If the flexure function Φ is taken as the basic one, we obtain

$$\tau_{xz} = G_2\left(\frac{\partial\Phi}{\partial x} + \frac{2P\nu_{31}}{E_3 I}xy\right), \quad \tau_{yz} = G_1\frac{\partial\Phi}{\partial y}. \qquad (67.6)$$

The problem reduces to that of determining a function $\Phi(x, y)$ giving a minimum value to the integral

$$U_2 = \int\int \left[G_2\left(\frac{\partial\Phi}{\partial x}\right)^2 + G_1\left(\frac{\partial\Phi}{\partial y}\right)^2 + \right.$$

$$\left. + \frac{2P}{I}\left(\frac{2G_2\nu_{31}}{E_3}xy\frac{\partial\Phi}{\partial x} + y\Phi\right)\right] dx\,dy. \qquad (67.7)$$

The approximate solution is obtained by assigning a family of functions $\Phi_{mn}(x, y)$, and seeking Φ in the form of a sum:

$$\Phi = \sum_{m=1}^{M}\sum_{n=1}^{N} B_{mn}\Phi_{mn}. \qquad (67.8)$$

The coefficients B_{mn} are determined from the equations

$$\frac{\partial U_2}{\partial B_{mn}} = 0 \quad (m = 1, 2, \ldots, M;\ n = 1, 2, \ldots, N). \qquad (67.9)$$

Besides these two, there are other approximate methods available for the solution of bending and torsion problems for bars. On the one hand, there are modifications of variational methods, and on the other hand, a number of methods have been developed which cannot be termed variational. Among the latter are so-called *small parameter methods* the basic idea of which is the following. If, for example, one dimension of a section considerably exceeds the other, or the elastic moduli (or the strain coefficients a_{ij}) differ greatly from one another, a small parameter is introduced, characterizing this difference. The unknown function (ψ or Φ) is sought in the form of a power series of the small parameter; in the process of solving the problem higher powers of the parameter, beginning, for example, with the second, are rejected as small quantities of higher order.

We shall not discuss here the solutions of special problems; some of them relating to the allied torsion problem have been given in Sec. 56. We only note that many special cases have been considered by L.S. Leibenzon in [23] and [76], and also by V.S. Sarkisyan in [35]. A special case has been considered in the author's book [26], namely that of an "elongated section" when the width of the section is considerably greater than its depth (or thickness).

68. Bending of a Non-homogeneous Orthotropic Cantilever

If a cantilever is continuously non-homogeneous but non-orthotropic, the stress distribution in it is more complicated than for a homogeneous one: all six stress components are different from zero, and the equations defining them are much more complex. We shall consider a cantilever with anisotropy and non-homogeneity of a special kind, namely the cantilever is orthotropic; of the three planes of elastic symmetry passing through each point, one is parallel to the plane of the cross section, and the other two are parallel to the axis of the cantilever, or, what is the same thing, to its generators; the like planes of elastic

symmetry are parallel to one another, i.e., the body is rectilinearly anisotropic (see [95]).

Let the centroid O of the free end section be taken as the origin of co-ordinates, the z axis being parallel to the generators, and the x and y axes normal to the planes of elastic symmetry (Fig. 94). The region of the cross section is assumed to be finite, simply or multiply connected, but the x and y axes are not, in general, coincident with the principal axes of inertia, and the force P is applied at the point O and is directed arbitrarily in the xy plane; its components in the directions of the x and y axes are denoted by P_1 and P_2, respectively. Body forces are absent. In the present case it is more convenient to use the engineering elastic characteristics (Young's and shear moduli and Poisson's ratios), E_i, G_{ij}, ν_{ij}, as well as the reduced elastic characteristics. All these quantities are considered to be continuous, single-valued, and differentiable functions of two variables, x, y.

It is obvious that

$$\left.\begin{aligned} &\beta_{11}=\frac{1-\nu_{13}\nu_{31}}{E_1},\\ &\beta_{12}=-\frac{\nu_{12}+\nu_{13}\nu_{32}}{E_1},\\ &\beta_{22}=\frac{1-\nu_{23}\nu_{32}}{E_2},\\ &\beta_{66}=\frac{1}{G_3},\quad \beta_{44}=\frac{1}{G_1},\quad \beta_{55}=\frac{1}{G_2}. \end{aligned}\right\} \tag{68.1}$$

All equations of the theory of elasticity, the boundary conditions, and the equilibrium conditions can be satisfied by assuming that τ_{xz}, τ_{yz} are functions only of x, y, and the other components are proportional to z:

$$\sigma_x = z\sigma_1, \quad \sigma_y = z\sigma_2, \quad \sigma_z = z\sigma_3, \quad \tau_{xy} = z\tau. \tag{68.2}$$

We introduce the notation

$$D_1=\frac{1}{E_3}(\sigma_3-\nu_{31}\sigma_1-\nu_{32}\sigma_2). \tag{68.3}$$

From this

$$\sigma_z = z\,(E_3D_1 + \nu_{31}\sigma_1 + \nu_{32}\sigma_2). \tag{68.4}$$

The fundamental system of equilibrium equations for the body under consideration is written as

$$\left.\begin{aligned} &\frac{\partial\sigma_1}{\partial x}+\frac{\partial\tau}{\partial y}=0, \quad \frac{\partial\tau}{\partial x}+\frac{\partial\sigma_2}{\partial y}=0,\\ &\frac{\partial\tau_{xz}}{\partial x}+\frac{\partial\tau_{yz}}{\partial y}+E_3D_1+\nu_{31}\sigma_1+\nu_{32}\sigma_2=0;\end{aligned}\right\} \tag{68.5}$$

$$\left.\begin{aligned} &\varepsilon_x=z\,(\beta_{11}\sigma_1+\beta_{12}\sigma_2-\nu_{31}D_1), \quad \gamma_{yz}=\frac{\tau_{yz}}{G_1},\\ &\varepsilon_y=z\,(\beta_{12}\sigma_1+\beta_{22}\sigma_2-\nu_{32}D_1), \quad \gamma_{xz}=\frac{\tau_{xz}}{G_2},\\ &\varepsilon_z=zD_1, \quad \gamma_{xy}=\frac{\tau_{xy}}{G_3}.\end{aligned}\right\} \tag{68.6}$$

The further procedure is the same as in the case of a homogeneous cantilever. Leaving out the intermediate computations, we give the final formulas and equations.

(1) $$D_1 = A_1x + B_1y + C_1. \tag{68.7}$$

(2) The stresses are expressed in terms of two stress functions, F_1 and ψ:

$$\left.\begin{aligned} &\sigma_x=z\frac{\partial^2F_1}{\partial y^2}, \quad \sigma_y=z\frac{\partial^2F_1}{\partial x^2}, \quad \tau_{xy}=-z\frac{\partial^2F_1}{\partial x\,\partial y},\\ &\tau_{xz}=\frac{\partial\psi}{\partial y}+\tau_1, \quad \tau_{yz}=-\frac{\partial\psi}{\partial x}+\tau_2,\end{aligned}\right\} \tag{68.8}$$

where τ_1, τ_2 is a particular solution of the third equation of (68.5).

(3) The first stress function, F_1, satisfies a linear nonhomogeneous equation of the fourth order with variable coefficients

$$\begin{aligned} &\frac{\partial^2}{\partial x^2}\left(\beta_{22}\frac{\partial^2F_1}{\partial x^2}+\beta_{12}\frac{\partial^2F_1}{\partial y^2}\right)+\\ &\quad+\frac{\partial^2}{\partial y^2}\left(\beta_{12}\frac{\partial^2F_1}{\partial x^2}+\beta_{11}\frac{\partial^2F_1}{\partial y^2}\right)+\frac{\partial^2}{\partial x\,\partial y}\left(\beta_{66}\frac{\partial^2F_1}{\partial x\,\partial y}\right)=\\ &\quad=\frac{\partial^2}{\partial x^2}\left[\nu_{32}(A_1x+B_1y+C_1)\right]+\frac{\partial^2}{\partial y^2}\left[\nu_{31}(A_1x+B_1y+C_1)\right],\end{aligned} \tag{68.9}$$

and the boundary conditions on the contour of the cross section

$$\frac{\partial F_1}{\partial x} = c_1, \qquad \frac{\partial F_1}{\partial y} = c_2. \tag{68.10}$$

In the case of a finite simply connected region $c_1 = c_2 = 0$.

(4) The second stress function, ψ, satisfies the equation

$$\frac{\partial}{\partial x}\left(\frac{1}{G_1}\frac{\partial\psi}{\partial x}\right) + \frac{\partial}{\partial y}\left(\frac{1}{G_2}\frac{\partial\psi}{\partial y}\right) =$$
$$= \frac{\partial}{\partial x}\left(\frac{\tau_2}{G_1}\right) - \frac{\partial}{\partial y}\left(\frac{\tau_1}{G_2}\right) + \frac{\partial}{\partial x}\int \nu_{32}(A_1x + B_1y + C_1)\,dy -$$
$$- \frac{\partial}{\partial y}\int \nu_{31}(A_1x + B_1y + C_1)\,dx + \frac{\partial}{\partial y}\int (\beta_{11}\sigma_1 + \beta_{12}\sigma_2)\,dx -$$
$$- \frac{\partial}{\partial x}\int (\beta_{12}\sigma_1 + \beta_{22}\sigma_2)\,dy + \eta(y) + \xi(x) - 2\vartheta. \tag{68.11}$$

Here $\eta(y)$ and $\xi(x)$ are terms of the expression

$$\frac{\partial}{\partial y}\int \nu_{31}(A_1x + B_1y + C_1)\,dx -$$
$$- \frac{\partial}{\partial x}\int \nu_{32}(A_1x + B_1y + C_1)\,dy, \tag{68.12}$$

depending only on y and only on x.

The boundary condition for ψ is of the form

$$\psi = \int_0^s (\tau_2\,dy - \tau_1\,dx) + c \tag{68.13}$$

(s is the arc length of the contour, and c is a constant, which can be fixed arbitrarily on one of the contours bounding the section).

(5) In addition to the conditions on the lateral surface, there are equilibrium conditions to be fulfilled at each cross section:

$$\left.\begin{aligned}
&\iint \tau_{xz}\,dx\,dy = -P_1, && \iint \sigma_z y\,dx\,dy = -P_2 z,\\
&\iint \tau_{yz}\,dx\,dy = -P_2, && \iint \sigma_z x\,dx\,dy = -P_1 z,\\
&\iint \sigma_z\,dx\,dy = 0, && \iint (\tau_{yz}x - \tau_{xz}y)\,dx\,dy = 0.
\end{aligned}\right\} \tag{68.14}$$

It may be shown that these equations just suffice to determine the four unknown constants, A_1, B_1, C_1, ϑ.

In the special case when ν_{31} depends only on x, and ν_{32} only on y, the problem is greatly simplified since

$$\left.\begin{aligned} &\sigma_x = \sigma_y = \tau_{xy} = 0, \quad F_1 = 0, \\ &\sigma_z = E_3 (A_1 x + B_1 y + C_1) z. \end{aligned}\right\} \tag{68.15}$$

The remaining stresses are still determined by formulas (68.8), where τ_1, τ_2 is, as before, a particular solution of the third equation of (68.5) in which $\sigma_1 = \sigma_2 = 0$.

The stress function ψ satisfies the equation

$$\frac{\partial}{\partial x}\left(\frac{1}{G_1}\frac{\partial\psi}{\partial x}\right) + \frac{\partial}{\partial y}\left(\frac{1}{G_2}\frac{\partial\psi}{\partial y}\right) = \\ = \frac{\partial}{\partial x}\left(\frac{\tau_2}{G_1}\right) - \frac{\partial}{\partial y}\left(\frac{\tau_1}{G_2}\right) + 2A\int \nu_{32}\,dy - 2B\int \nu_{31}\,dx - 2\vartheta. \tag{68.16}$$

The normal stress is, as before, proportional to the distance from the free end, but is, in general, a non-linear function of the co-ordinates x and y, depending on the way the modulus $E_3(x, y)$ is prescribed. The problem is also simplified in the case when the principal axes of inertia of the section x and y are normal to the planes of elastic symmetry, and the force is directed along one of these axes.

69. Bending of a Non-homogeneous Orthotropic Cantilever of Rectangular Section

We shall sketch the procedure of solution for one of the simplest problems of the bending of a non-homogeneous cantilever by a transverse force [95]. Let there be an orthotropic cantilever of rectangular section of dimensions a, b, l (l is the length) with planes of elastic symmetry parallel to the faces of the parallelepiped. The axes x, y, z are directed as shown in Fig. 95, and it is assumed that the moduli G_1, G_2, E_3 depend only on y, and Poisson's ratios ν_{31} and ν_{32} are constant. From the considerations outlined in the preceding section it appears that three components of stress are zero:

$$\sigma_x = \sigma_y = \tau_{xy} = 0. \tag{69.1}$$

The normal stress at the cross section is

$$\sigma_z = E_3 (A_1 x + B_1 y + C_1) z, \tag{69.2}$$

but it follows from the first equilibrium equation of (68.5) that $A_1 = 0$ and

$$\sigma_z = E_3 (B_1 y + C_1) z. \tag{69.3}$$

It may be considered obvious that the force P produces no twisting, and hence $\vartheta = 0$. The constants B_1 and C_1 are determined from the equilibrium equations (68.14), depending on the way E_3 is prescribed; the resulting two equations for them will not be written out. The third equilibrium equation of (68.5) for a continuous medium is of the form

$$\frac{\partial \tau_{xz}}{\partial x} + \frac{\partial \tau_{yz}}{\partial y} + E_3 (B_1 y + C_1) = 0. \tag{69.4}$$

Assume B_1 and C_1 to be known [determined from the given modulus $E_3(y)$], and take the solution of (69.4) in the form

$$\tau_1 = -E_3 (B_1 y + C_1) x, \quad \tau_2 = 0. \tag{69.5}$$

The remaining two stresses are determined by the formulas

$$\tau_{xz} = \frac{\partial \psi}{\partial y} - E_3 (B_1 y + C_1) x, \quad \tau_{yz} = -\frac{\partial \psi}{\partial x}, \tag{69.6}$$

where the stress function ψ satisfies, in this case, the equation

$$\frac{\partial}{\partial x}\left(\frac{1}{G_1}\frac{\partial \psi}{\partial x}\right) + \frac{\partial}{\partial y}\left(\frac{1}{G_2}\frac{\partial \psi}{\partial y}\right) = \\ = x\frac{\partial}{\partial y}\left[\frac{E_3}{G_2}(B_1 y + C_1)\right] - 2xB_1\nu_{31}. \tag{69.7}$$

The problem is further solved in the same way as that of a homogeneous cantilever. By expanding the right-hand side of Eq. (69.7) in a Fourier series in the interval $(-a/2, a/2)$, we obtain after elementary manipulation, instead of (69.7), the equation

$$\frac{G_2}{G_1}\frac{\partial^2 \psi}{\partial x^2} + \frac{\partial^2 \psi}{\partial y^2} + G_2\left(\frac{1}{G_2}\right)'\frac{\partial \psi}{\partial y} = \\ = \left\{2B_1\nu_{31} - \left[\frac{E_3(B_1 y + C_1)}{G_2}\right]'\right\}\frac{G_2 a}{\pi}\sum_{m=1}^{\infty}\frac{(-1)^m}{m}\sin\frac{2m\pi}{a}x. \tag{69.8}$$

The expression for ψ is also sought in the form of a series:

$$\psi = \sum_{m=1}^{\infty} Y_m(y) \sin \frac{2m\pi x}{a}. \tag{69.9}$$

The equation for Y_m is obtained as

$$Y_m'' - \frac{G_2'}{G_2} Y_m' - \left(\frac{2m\pi}{a}\right)^2 \frac{G_2}{G_1} Y_m =$$
$$= \frac{a(-1)^m}{\pi m} G_2 \left\{ 2B_1 \nu_{31} - \left[\frac{E_3(B_1 y + C_1)}{G_2} \right]' \right\}, \tag{69.10}$$

its general integral is of the form

$$Y_m = A_m Y_{m1} + B_m Y_{m2} + Y_{m0}. \tag{69.11}$$

The expression obtained for the stress function is similar to that for the stress function in the torsion of a non-homogeneous orthotropic bar [see (58.6)]:

$$\psi = \sum_{m=1}^{\infty} (A_m Y_{m1} + B_m Y_{m2} + Y_{m0}) \sin \frac{2m\pi}{a} x. \tag{69.12}$$

The further procedure of finding the solution of the problem of the bending of a cantilever reduces, on the one hand, to the determination of particular solutions Y_{m1}, Y_{m2}, Y_{m0} of Eq. (69.10) corresponding to given G_1, G_2, E_3 (functions of the variable y) and, on the other hand, to the determination of the constants A_m and B_m from the boundary conditions on the sides $y = \pm b/2$ (the conditions on the other two sides are obviously satisfied).

Below are given particular solutions for the case when the moduli are exponential functions of the co-ordinate y. Let

$$G_1 = g_1 e^{\frac{n\pi y}{b}}, \quad G_2 = g_2 e^{\frac{n\pi y}{b}}, \quad E_3 = e_3 e^{\frac{n\pi y}{b}}, \tag{69.13}$$

where n is any real number different from zero.

The linearly independent solutions of a homogeneous equation corresponding to (69.10) and a particular solution

of the non-homogeneous equation are of the form

$$Y_{m1}=e^{\frac{f\pi y}{b}}, \quad Y_{m2}=e^{\frac{h\pi y}{b}}, \tag{69.14}$$

$$Y_{m0}=\frac{e_3-2g_2\nu_{31}}{4g}B\left(\frac{a}{m\pi}\right)^3(-1)^m e^{\frac{n\pi y}{b}} \tag{69.15}$$

$$\left(g=\frac{G_2}{G_1}=\frac{g_2}{g_1}=\text{constant}\right).$$

Here, in addition to the notation introduced previously, we have used the symbols

$$\left.\begin{aligned} f&=0.5\left[n+\sqrt{n^2+\left(\frac{4m}{d}\right)^2}\right],\\ h&=0.5\left[n-\sqrt{n^2+\left(\frac{4m}{d}\right)^2}\right].\end{aligned}\right\} \tag{69.16}$$

We leave the discussion at this point, remembering that the problem of the bending of a non-homogeneous orthotropic cantilever is closely similar to that of the torsion of the same bar considered in greater detail in Secs. 58 and 59.

70. Equilibrium of a Cantilever Having Cylindrical Anisotropy under a Transverse Force

We now consider the state of stress in a homogeneous cantilever whose material possesses cylindrical anisotropy; we derive equations for the determination of stresses and displacements and give a specific example. Suppose that the cantilever is cylindrically orthotropic; a generalization of the solution to the case when there is only one plane of elastic symmetry or when there is none presents no great difficulty, except that the equations become somewhat more complicated.*

Let there be a cantilever bounded by the surface of an arbitrary cylinder. The axis of anisotropy passing either inside the given body, or along its surface, or outside the body is taken as the z axis of a cylindrical co-ordinate system; in all cases it is parallel to the generators. Through each

* The case of one plane of elastic symmetry is considered in [26].

point there pass three planes of elastic symmetry: the first is normal to the axis of anisotropy, the second passes through the axis, and the third is orthogonal to these two. One end of the cantilever is fixed, and the other is acted on by a bending force P whose line of action passes through the centroid O' and coincides with one of the principal axes of inertia of the region of the cross section (the latter is assumed to be finite). Let the body be referred to two co-ordinate systems: (1) x', y', z', in which the z' axis is parallel to the generators, but does not, in general, coincide with the axis of anisotropy, and the axes x', y' are directed along the principal axes of inertia of the section; (2) x, y, z, in which the z axis coincides with the axis of anisotropy, and the axes x, y are parallel to the axes x', y', respectively.

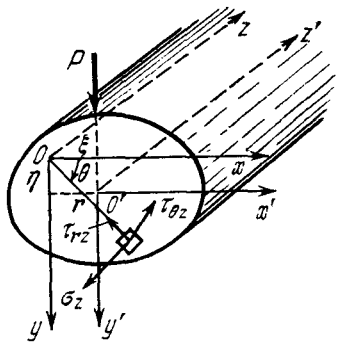

Fig. 96

The polar angle θ is measured from the x axis, and the polar co-ordinate r from the origin O. The co-ordinates of the point O' in the x, y system are denoted by ξ, η (Fig. 96).

In an isotropic or anisotropic and homogeneous cantilever with a plane of elastic symmetry normal to the axis, the resulting stress distribution, as has already been noted above, is characterized by the following: the stress σ_z is proportional to the bending moment:

$$\sigma_z = -\frac{P}{I} zy' = -\frac{Pz}{I}(r\sin\theta - \eta), \tag{70.1}$$

the components τ_{rz}, $\tau_{\theta z}$ are independent of z, and the remaining stresses, σ_r, σ_θ, $\tau_{r\theta}$, are zero. It is easy to show that such a distribution is only possible in the case of an orthotropic body for which

$$a_{13} = a_{23}. \tag{70.2}$$

If condition (70.2) is not fulfilled, it is necessary to proceed from more general assumptions to obtain the equations

and solution of the problem. Suppose that all six components of stress are different from zero, but two of them, τ_{rz} and $\tau_{\theta z}$, are independent of z, and the others are proportional to z:

$$\left.\begin{aligned} \sigma_r &= z\sigma_{r1}, & \sigma_\theta &= z\sigma_{\theta 1}, \\ \tau_{r\theta} &= z\tau_{r\theta 1}, & \sigma_z &= z\sigma_{z1}. \end{aligned}\right\} \tag{70.3}$$

The fundamental system of equations of the theory of elasticity for the body under consideration is then written as

$$\left.\begin{aligned} \frac{\partial\sigma_{r1}}{\partial r} + \frac{1}{r}\frac{\partial\tau_{r\theta 1}}{\partial\theta} + \frac{\sigma_{r1}-\sigma_{\theta 1}}{r} &= 0, \\ \frac{\partial\tau_{r\theta 1}}{\partial r} + \frac{1}{r}\frac{\partial\sigma_{\theta 1}}{\partial\theta} + \frac{2\tau_{r\theta 1}}{r} &= 0, \\ \frac{\partial\tau_{rz}}{\partial r} + \frac{1}{r}\frac{\partial\tau_{\theta z}}{\partial\theta} + \frac{\tau_{rz}}{r} + \sigma_{z1} &= 0; \end{aligned}\right\} \tag{70.4}$$

$$\left.\begin{aligned} \varepsilon_r &= z\,(a_{11}\sigma_{r1} + a_{12}\sigma_{\theta 1} + a_{13}\sigma_{z1}), \\ \varepsilon_\theta &= z\,(a_{12}\sigma_{r1} + a_{22}\sigma_{\theta 1} + a_{23}\sigma_{z1}), \\ \varepsilon_z &= z\,(a_{13}\sigma_{r1} + a_{23}\sigma_{\theta 1} + a_{33}\sigma_{z1}), \\ \gamma_{\theta z} &= a_{44}\tau_{\theta z},\ \gamma_{rz} = a_{55}\tau_{rz},\ \gamma_{r\theta} = a_{66}z\tau_{r\theta 1}. \end{aligned}\right\} \tag{70.5}$$

Since the cantilever is assumed to be homogeneous, all a_{ij} are constant.

We deal with this system in the same way as with those considered previously in the investigation of other problems. By integrating the third, fourth, and fifth equations of (70.5), we obtain expressions for displacements containing arbitrary functions of the variables r, θ. Next, we satisfy the first, second, and sixth equations, and introduce stress functions identically satisfying Eqs. (70.4). As a result, we obtain all equations necessary to determine stresses and displacements. After some manipulation we arrive at the following results.

The displacements are determined by the formulas

$$\left.\begin{aligned} u_r &= -\frac{z^3}{6}(A_1\cos\theta + B_1\sin\theta) + zU_1 + u_r', \\ u_\theta &= -\frac{z^3}{6}(-A_1\sin\theta + B_1\cos\theta) + zV_1 + u_\theta', \\ w &= \frac{z^2}{2}(A_1 r\cos\theta + B_1 r\sin\theta + C_1) + W + w'. \end{aligned}\right\} \tag{70.6}$$

Here A_1, B_1, C_1 are constants to be determined from the conditions for the equilibrium of a part of the cantilever of arbitrary length z, and u_r', u_θ', w' are rigid-body displacements determined by formulas (23.13); they contain six constants, which must be found from the fixing conditions.

The functions U_1, V_1, W satisfy the equations

$$\left.\begin{aligned}
&\frac{\partial U_1}{\partial r}=\beta_{11}\sigma_{r1}+\beta_{12}\sigma_{\theta 1}+\\
&\qquad\qquad+\frac{a_{13}}{a_{33}}(A_1 r\cos\theta+B_1 r\sin\theta+C_1),\\
&\frac{1}{r}\frac{\partial V_1}{\partial\theta}+\frac{U_1}{r}=\\
&=\beta_{12}\sigma_{r1}+\beta_{22}\sigma_{\theta 1}+\frac{a_{23}}{a_{33}}(A_1 r\cos\theta+B_1 r\sin\theta+C_1),\\
&\frac{1}{r}\frac{\partial U_1}{\partial\theta}+\frac{\partial V_1}{\partial r}-\frac{V_1}{r}=\beta_{66}\tau_{r\theta 1};
\end{aligned}\right\}\qquad(70.7)$$

$$\frac{\partial W}{\partial r}+U_1=a_{55}\tau_{rz},\qquad \frac{1}{r}\frac{\partial W}{\partial\theta}+V_1=a_{44}\tau_{\theta z}-\vartheta r.\qquad(70.8)$$

In Eqs. (70.7) β_{ij} are the reduced strain coefficients:

$$\beta_{ij}=a_{ij}-\frac{a_{i3}a_{j3}}{a_{33}}\qquad(i,\ j=1,\ 2,\ 6;\ a_{16}=a_{26}=a_{36}=0).\qquad(70.9)$$

By eliminating U_1, V_1 from (70.7) and W from (70.8) by differentiation and subtraction, we obtain two equations relating the stress components. We next introduce two stress functions, $F_1(r,\theta)$ and $\psi(r,\theta)$, as in the plane strain and torsion problems:

$$\left.\begin{aligned}
&\sigma_{r1}=\frac{1}{r}\frac{\partial F_1}{\partial r}+\frac{1}{r^2}\frac{\partial^2 F_1}{\partial\theta^2},\qquad \sigma_{\theta 1}=\frac{\partial^2 F_1}{\partial r^2},\\
&\tau_{r\theta 1}=-\frac{\partial^2}{\partial r\,\partial\theta}\left(\frac{F_1}{r}\right),\qquad \tau_{rz}=\frac{1}{r}\frac{\partial\psi}{\partial\theta}+\tau_1,\\
&\tau_{\theta z}=-\frac{\partial\psi}{\partial r}+\tau_2
\end{aligned}\right\}\qquad(70.10)$$

[τ_1, τ_2 is a particular solution of the third equilibrium equation of (70.4)]. The formula for the stress σ_z is obtained as

$$\sigma_z=\frac{z}{a_{33}}(A_1 r\cos\theta+B_1 r\sin\theta+C_1)-$$
$$-\frac{z}{a_{33}}(a_{13}\sigma_{r1}+a_{23}\sigma_{\theta 1}).\qquad(70.11)$$

From the equations obtained by eliminating U_1, V_1 from (70.7) and W from (70.8) we find equations that are satisfied by the stress functions:*

$$L_4' F_1 = \frac{2(a_{13}-a_{23})}{a_{33} r}(A_1 \cos\theta + B_1 \sin\theta); \tag{70.12}$$

$$a_{44}\left(\frac{\partial^2\psi}{\partial r^2}+\frac{1}{r}\frac{\partial\psi}{\partial r}\right)+a_{55}\frac{1}{r^2}\frac{\partial^2\psi}{\partial\theta^2}=$$
$$=\frac{1}{r}\frac{\partial U_1}{\partial\theta}+\frac{\partial V_1}{\partial r}-\frac{V_1}{r}-2\vartheta+a_{44}\left(\frac{\partial\tau_2}{\partial r}+\frac{\tau_2}{r}\right)-\frac{a_{55}}{r}\frac{\partial\tau_1}{\partial\theta}. \tag{70.13}$$

In the case of a simply connected region of the section the conditions that must be fulfilled on the lateral surface become, after integration with respect to the arc length of the contour,

$$\frac{\partial F_1}{\partial r}=\frac{\partial F_1}{\partial\theta}=0, \quad \psi=\int_0^s(\tau_2\,dr-\tau_1 r\,d\theta)+c. \tag{70.14}$$

The constants A_1, B_1, C_1, and ϑ are determined, as has been stated, from the equilibrium conditions. In cylindrical co-ordinates these conditions are of the form

$$\left.\begin{aligned}
&(A_1\xi+B_1\eta+C_1)S-\iint(a_{13}\sigma_{r1}+a_{23}\sigma_{\theta1})\,dS=0,\\
&B_1 I_1-\iint(a_{13}\sigma_{r1}+a_{23}\sigma_{\theta1})(r\sin\theta-\eta)\,dS=\\
&\qquad\qquad\qquad

The stresses σ_z, τ_{rz}, $\tau_{\theta z}$ characteristic of bending are accompanied by the stresses σ_r, σ_θ, $\tau_{r\theta}$ characteristic of the plane problem; it is possible to separate these stress systems in an orthotropic body for which $a_{13} = a_{23}$.

The procedure for solution is as follows. First determine the function F_1, i.e., solve the plane strain problem; the function thus found contains three constants, A_1, B_1, C_1, which are determined from the first three equations of (70.15). On determining the stresses σ_r, σ_θ, $\tau_{r\theta}$, next find, from Eqs. (70.7), the functions U_1 and V_1 entering into Eq. (70.13), which is satisfied by ψ.

The constant ϑ is found from the fourth condition of (70.15).

71. Stress Distribution in a Cantilever in the Form of a Hollow or Solid Cylinder

As an example, consider a cantilever bounded by two surfaces of coaxial circular cylinders (Fig. 97). It is assumed that the axis of anisotropy coincides with the geometrical axis z and that at each point there are three planes of elastic symmetry: the first is perpendicular to the z axis, the second is radial, and the third is orthogonal to these two (see [26], Sec. 53).

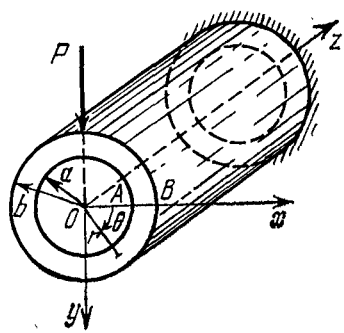

Fig. 97

The conditions on the inner and outer cylindrical surfaces are written as follows: when $r = a$ and $r = b$,

$$\sigma_r = \tau_{r\theta} = \tau_{rz} = 0. \qquad (71.1)$$

We only consider the case when the elastic constants satisfy the condition

$$a_{13} = a_{23} \qquad (71.2)$$

If the strain coefficients satisfy condition (71.2), the function F_1 satisfies the homogeneous equation $L_4' F_1 = 0$ and the first and second conditions of (70.14); hence it

may be taken that

$$F_1 = 0, \quad B_1 = -\frac{P}{I}, \quad A_1 = C_1 = \vartheta = 0; \tag{71.3}$$

$$\left.\begin{aligned} &\sigma_r = \sigma_\theta = \tau_{r\theta} = 0, \quad \sigma_z = -\frac{P}{I} zr \sin\theta, \\ &\tau_{rz} = \frac{1}{r}\frac{\partial\psi}{\partial\theta} + \tau_1, \quad \tau_{\theta z} = -\frac{\partial\psi}{\partial r} + \tau_2. \end{aligned}\right\} \tag{71.4}$$

Here

$$I = \frac{\pi}{4}(b^4 - a^4)$$

(the moment of inertia with respect to a diameter), and τ_1, τ_2 is a particular solution of the equation

$$\frac{\partial\tau_{rz}}{\partial r} + \frac{1}{r}\frac{\partial\tau_{\theta z}}{\partial\theta} + \frac{\tau_{rz}}{r} - \frac{P}{I} r \sin\theta = 0. \tag{71.5}$$

It may be assumed, for example, that

$$\tau_1 = 0, \quad \tau_2 = -\frac{P}{I} r^2 \cos\theta. \tag{71.6}$$

Equation (70.13) for ψ then becomes

$$a_{44}\left(\frac{\partial^2\psi}{\partial r^2} + \frac{1}{r}\frac{\partial\psi}{\partial r}\right) + \frac{a_{55}}{r^2}\frac{\partial^2\psi}{\partial\theta^2} = \\ = -\frac{P}{I}(3a_{44} + 2a_{13}) r \cos\theta. \tag{71.7}$$

The solution of this equation is sought in the form

$$\psi = f(r) \cos\theta. \tag{71.8}$$

The unknown function $f(r)$ satisfies the equation

$$a_{44}\left(f'' + \frac{f'}{r}\right) - a_{55}\frac{f}{r^2} = -\frac{P}{I}(3a_{44} + 2a_{13}) r. \tag{71.9}$$

From this

$$\psi = \left(Mr^\mu + Nr^{-\mu} - \frac{P}{I}\lambda r^3\right)\cos\theta, \tag{71.10}$$

where

$$\left.\begin{aligned} &\mu = \sqrt{\frac{a_{55}}{a_{44}}} = \sqrt{\frac{G_{\theta z}}{G_{rz}}}, \\ &\lambda = \frac{3a_{44} + 2a_{13}}{9a_{44} - a_{55}} = \frac{3 - \dfrac{2G_{\theta z}\nu_{zr}}{E_z}}{9 - \mu^2}. \end{aligned}\right\} \tag{71.11}$$

Here $G_{\theta z}$, G_{rz} are the shear moduli for a tangential and a radial plane, E_z is Young's modulus for the axial direction z, and ν_{zr} is Poisson's ratio characterizing the deformation in a radial direction when tension is applied in the z direction.

On determining the constants M and N from the boundary conditions (71.1), we obtain the following final formulas for the shearing stresses:

$$\tau_{rz}=\frac{Pb^2}{I}\lambda\left(\rho^2-\frac{1-c^{\mu+3}}{1-c^{2\mu}}\rho^{\mu-1}-\frac{1-c^{\mu-3}}{1-c^{2\mu}}c^{\mu+3}\rho^{-\mu-1}\right)\sin\theta,$$

$$\tau_{\theta z}=-\frac{Pb^2}{I}\rho^2\cos\theta+\frac{Pb^2}{I}\lambda\left(3\rho^2-\frac{1-c^{\mu+3}}{1-c^{2\mu}}\mu\rho^{\mu-1}+\right.$$

$$\left.+\frac{1-c^{\mu-3}}{1-c^{2\mu}}\mu c^{\mu+3}\rho^{-\mu-1}\right)\cos\theta. \qquad (71.12)$$

Here we have used the notation:

$$c=\frac{a}{b}, \qquad \rho=\frac{r}{b}. \qquad (71.13)$$

The stresses at points of a diameter perpendicular to the force at the inner and outer surfaces are: at the point A ($\rho = c$)

$$\tau_{\theta z}=\frac{P}{I}b^2c^2\left(3\lambda-1+\lambda\mu\frac{c^{2\mu}-2c^{\mu-3}+1}{1-c^{2\mu}}\right); \qquad (71.14)$$

at the point B ($\rho = 1$)

$$\tau_{\theta z}=\frac{P}{I}b^2\left(3\lambda-1-\lambda\mu\frac{c^{2\mu}-2c^{\mu+3}+1}{1-c^{2\mu}}\right). \qquad (71.15)$$

One of these values is a maximum for the whole cantilever. For example, for $\lambda = \mu = 1$, $c = 0.5$, the maximum stress is

$$\tau_{\max}=\frac{Pb^2}{I}1.75 \qquad (71.16)$$

and occurs at the inner surface, while the stress at the outer surface is

$$\tau_{\theta z}=\frac{Pb^2}{I}0.5. \qquad (71.17)$$

TORSION OF BODIES OF REVOLUTION

Chapter 8

The last two chapters, the eighth and ninth, are devoted to the investigation of the elastic equilibrium of anisotropic bodies of revolution that are deformed under external forces, but remain bodies of revolution during deformation. This kind of deformation is only possible for special cases of anisotropy and for special cases of load distribution. We may distinguish two types of state of stress and strain in which a body of revolution transforms into a body of revolution: (1) torsion and (2) axially symmetric deformation. In the present chapter we derive general equations of the theory of torsion for bodies of revolution and give solutions of several problems of practical interest.

72. General Equations of the Theory of Torsion for Continuously Non-homogeneous Bodies of Revolution Having Cylindrical Anisotropy

Consider an elastic body of revolution (for example, a bar of variable section) that has cylindrical anisotropy, with an axis of anisotropy coinciding with the axis of revolution z, and is continuously non-homogeneous, with elastic characteristics a_{ij} depending only on two co-ordinates. For definiteness, suppose that one end is rigidly fixed, and the other end is acted on by distributed tangential forces reducing to a torque; the lateral surface is acted on by distributed forces t_n tangential to the contour of the cross section and not varying along this contour. During deformation, the body remains a body of revolution if the planes of meridional sections are planes of elastic symmetry; if this condition is not fulfilled, the deformed body is not, in general, a body of revolution. Let the body be

referred to a cylindrical co-ordinate system (Fig. 98). The generalized Hooke's law equations for a body having, at each point, a plane of elastic symmetry passing through the axis of revolution z (i.e., a meridional plane) are of the form

$$\left.\begin{aligned}
\varepsilon_r &= a_{11}\sigma_r + a_{12}\sigma_\theta + a_{13}\sigma_z + a_{15}\tau_{rz},\\
\varepsilon_\theta &= a_{12}\sigma_r + a_{22}\sigma_\theta + a_{23}\sigma_z + a_{25}\tau_{rz},\\
\varepsilon_z &= a_{13}\sigma_r + a_{23}\sigma_\theta + a_{33}\sigma_z + a_{35}\tau_{rz},\\
\gamma_{\theta z} &= a_{44}\tau_{\theta z} + a_{46}\tau_{r\theta},\\
\gamma_{rz} &= a_{15}\sigma_r + a_{25}\sigma_\theta + a_{35}\sigma_z + a_{55}\tau_{rz},\\
\gamma_{r\theta} &= a_{46}\tau_{\theta z} + a_{66}\tau_{r\theta}.
\end{aligned}\right\} \qquad (72.1)$$

The coefficients a_{44}, a_{46}, a_{66} in these equations may be assumed to be arbitrary continuous differentiable functions of two variables, r and z; the other coefficients a_{ij} may be

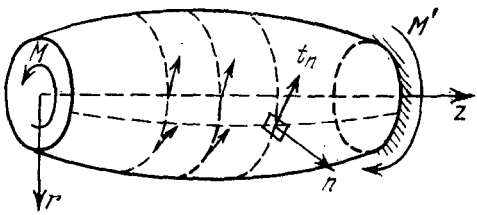

Fig. 98

any functions of all three variables, r, θ, z, since they will not enter into the equations of the theory of torsion.*

In deriving the general equations we shall proceed from the same assumptions that underlie the theory of torsion for a homogeneous isotropic body of revolution. Namely, the cross sections do not warp and no displacements occur in radial directions, i.e., each cross section rotates about the axis of revolution without changing its diameter.** In other words, we proceed from the following basic assump-

* The question as to whether there are yet other types of anisotropy [beyond the framework of scheme (72.1)] for which a twisted body remains a body of revolution requires special investigation.

** See [79] and [26] (Chap. 6, Sec. 54). See also [28], [88].

tions:

$$u_r = w = 0, \quad u_\theta = v\,(r,\ z). \tag{72.2}$$

It is obvious that

$$\left.\begin{aligned} &\varepsilon_r = \varepsilon_\theta = \varepsilon_z = \gamma_{rz} = 0, \\ &\gamma_{\theta z} = \frac{\partial v}{\partial z}, \quad \gamma_{r\theta} = \frac{\partial v}{\partial r} - \frac{v}{r}. \end{aligned}\right\} \tag{72.3}$$

Assuming, as usual, that Eqs. (72.1) are uniquely solvable for the stress components, we obtain

$$\sigma_r = \sigma_\theta = \sigma_z = \tau_{rz} = 0; \tag{72.4}$$

$$\left.\begin{aligned} &\frac{\partial\,(r^2\tau_{r\theta})}{\partial r} + \frac{\partial\,(r^2\tau_{\theta z})}{\partial z} = 0, \\ &\frac{\partial v}{\partial z} = a_{44}\tau_{\theta z} + a_{46}\tau_{r\theta}, \\ &\frac{\partial v}{\partial r} - \frac{v}{r} = a_{46}\tau_{\theta z} + a_{66}\tau_{r\theta}. \end{aligned}\right\} \tag{72.5}$$

The conditions that must be fulfilled on the lateral surface are

$$\tau_{\theta z}\cos\,(n,\ z) + \tau_{r\theta}\cos\,(n,\ r) = t_n. \tag{72.6}$$

If the forces at the ends are not prescribed and if we only know a twisting moment at any cross section a distance z from the free end, $M\,(z)$, the following condition must be fulfilled at this section:

$$\int\limits_{R_0(z)}^{R(z)} \tau_{\theta z} r^2\,dr = \frac{M\,(z)}{2\pi}. \tag{72.7}$$

Here $R\,(z)$ is the outer radius of the body at a distance z from the end $z = 0$, and $R_0\,(z)$ is the radius of a coaxial cavity if there is one; if, however, the body is solid (without cavities), $R_0 = 0$. When $z = 0$ and $z = l$, we obtain end conditions from (72.7).

We may mention two basic procedures for solving the torsion problem, depending on the choice of the fundamental function determining the stresses and displacements.

Procedure 1. The fundamental function is taken to be the stress function $\psi\,(r,\ z)$, which is introduced so as to

satisfy the first equation of (72.5) identically. We set

$$\tau_{\theta z} = \frac{1}{r^2}\frac{\partial\psi}{\partial r}, \quad \tau_{r\theta} = -\frac{1}{r^2}\frac{\partial\psi}{\partial z}. \tag{72.8}$$

By eliminating v from the other two equations of (72.5), we obtain an equation that is satisfied by the stress function:

$$\frac{\partial}{\partial r}\left[\frac{1}{r^3}\left(a_{44}\frac{\partial\psi}{\partial r} - a_{46}\frac{\partial\psi}{\partial z}\right)\right] - \\ - \frac{1}{r^3}\frac{\partial}{\partial z}\left[a_{46}\frac{\partial\psi}{\partial r} - a_{66}\frac{\partial\psi}{\partial z}\right] = 0. \tag{72.9}$$

The problem reduces to that of finding the function $\psi(r, z)$ in the region of one half of a meridional section, i.e., a region bounded by the z axis, two line segments normal to the z axis (the ends) and a generator. If there is a through coaxial cavity, one half of a meridional section is bounded by two line segments and two curves. Condition (72.6) may be transformed by integration with respect to the arc length s of the generator taking into account that

$$\cos(n, z) = -\frac{dr}{ds}, \quad \cos(n, r) = \frac{dz}{ds}. \tag{72.10}$$

In place of (72.6) we obtain the condition

$$\psi = -\int_0^s t_n r^2\, ds + c, \tag{72.11}$$

i.e., the stress function may be considered to be prescribed, apart from a constant, on the lateral surface and on the cavity surface (or, more precisely, on their generators). In addition this function must satisfy the condition

$$\psi(R, z) - \psi(R_0, z) = \frac{M(z)}{2\pi}. \tag{72.12}$$

Condition (72.11) is simplified if the external forces (and the reactions) are distributed only over the ends. The function ψ on the generators of the lateral surface is then a constant, which for a solid body may be taken equal to zero.

If a body is non-homogeneous and orthotropic, the generalized Hooke's law equations [the fourth and sixth equations

of (72.1)] are written as

$$\gamma_{\theta z} = \frac{1}{G_1}\tau_{\theta z}, \qquad \gamma_{r\theta} = \frac{1}{G_3}\tau_{r\theta}, \tag{72.13}$$

where $G_1 = G_{\theta z}$, $G_3 = G_{r\theta}$ (the shear moduli) are functions of r and z. Instead of (72.9) we have a simpler equation:

$$\frac{\partial}{\partial r}\left(\frac{1}{r^3 G_1}\frac{\partial\psi}{\partial r}\right) + \frac{1}{r^3}\frac{\partial}{\partial z}\left(\frac{1}{G_3}\frac{\partial\psi}{\partial z}\right) = 0. \tag{72.14}$$

Procedure 2. The fundamental function is taken to be the displacement $v(r, z)$. By solving the second and third equations of (72.5) for τ, we obtain

$$\left.\begin{aligned} \tau_{\theta z} &= A_{44}\frac{\partial v}{\partial z} + A_{46}\left(\frac{\partial v}{\partial r} - \frac{v}{r}\right), \\ \tau_{r\theta} &= A_{46}\frac{\partial v}{\partial z} + A_{66}\left(\frac{\partial v}{\partial r} - \frac{v}{r}\right). \end{aligned}\right\} \tag{72.15}$$

Here

$$\left.\begin{aligned} A_{44} = \frac{a_{66}}{\Delta}, \quad A_{46} = -\frac{a_{46}}{\Delta}, \quad A_{66} = \frac{a_{44}}{\Delta}, \\ \Delta = a_{44}a_{66} - a_{46}^2. \end{aligned}\right\} \tag{72.16}$$

Substituting (72.15) in the first equation of system (72.5), we obtain an equation that is satisfied by the displacement $v = u_\theta$:

$$\frac{\partial}{\partial r}\left\{r^2\left[A_{46}\frac{\partial v}{\partial z} + A_{66}\left(\frac{\partial v}{\partial r} - \frac{v}{r}\right)\right]\right\} + \\ + r^2\frac{\partial}{\partial z}\left[A_{44}\frac{\partial v}{\partial z} + A_{46}\left(\frac{\partial v}{\partial r} - \frac{v}{r}\right)\right] = 0. \tag{72.17}$$

The boundary conditions follow from Eqs. (72.15) and condition (72.6); they are more complicated than in the case when the fundamental function is taken to be ψ. The second procedure is convenient when the displacement v is prescribed on the surface.

In the case of an orthotropic body

$$A_{44} = G_1, \quad A_{46} = 0, \quad A_{66} = G_3,$$

and Eq. (72.17) becomes

$$\frac{\partial}{\partial r}\left[G_3 r^2\left(\frac{\partial v}{\partial r} - \frac{v}{r}\right)\right] + r^2\frac{\partial}{\partial z}\left(G_1\frac{\partial v}{\partial z}\right) = 0. \tag{72.18}$$

If a body has more general anisotropy and meridional planes are not planes of elastic symmetry, the problem becomes more complicated. In these cases the deformation may well be described, not as torsion, but as *generalized torsion of a body of revolution.*

73. Torsion of a Homogeneous Body of Revolution

In the case of a homogeneous body having cylindrical anisotropy a_{ij}, G_1, G_3 are constants, and the corresponding differential equations are equations with constant coefficients [28].

In the general case we have, instead of (72.9) and (72.17),

$$a_{44}\frac{\partial^2\psi}{\partial r^2}-2a_{46}\frac{\partial^2\psi}{\partial r\,\partial z}+a_{66}\frac{\partial^2\psi}{\partial z^2}-$$
$$-\frac{3a_{44}}{r}\frac{\partial\psi}{\partial r}+\frac{3a_{46}}{r}\frac{\partial\psi}{\partial z}=0; \qquad (73.1)$$

$$A_{66}\frac{\partial^2 v}{\partial r^2}+2A_{46}\frac{\partial^2 v}{\partial r\,\partial z}+A_{44}\frac{\partial^2 v}{\partial z^2}+$$
$$+A_{66}\left(\frac{1}{r}\frac{\partial v}{\partial r}-\frac{v}{r^2}\right)+A_{46}\frac{1}{r}\frac{\partial v}{\partial z}=0, \qquad (73.2)$$

In the case of an orthotropic body

$$\frac{\partial^2\psi}{\partial r^2}+g\frac{\partial^2\psi}{\partial z^2}-\frac{3}{r}\frac{\partial\psi}{\partial r}=0; \qquad (73.3)$$

$$\frac{\partial^2 v}{\partial r^2}+g\frac{\partial^2 v}{\partial z^2}+\frac{1}{r}\frac{\partial v}{\partial r}-\frac{v}{r^2}=0. \qquad (73.4)$$

Here we have used the notation:

$$g=\frac{G_1}{G_3}=\frac{G_{\theta z}}{G_{r\theta}}. \qquad (73.5)$$

In the case of an isotropic homogeneous body $g=1$. The problem of the torsion of a homogeneous anisotropic body of revolution with a region S can be reduced to that for an isotropic body, but with a modified region S_1, by a simple change of the variables. For an orthotropic body, this change is of the form

$$r_1=r, \qquad z_1=\frac{z}{\sqrt{g}}. \qquad (73.6)$$

The procedure for obtaining a region S_1 from a given one is illustrated in Fig. 99.

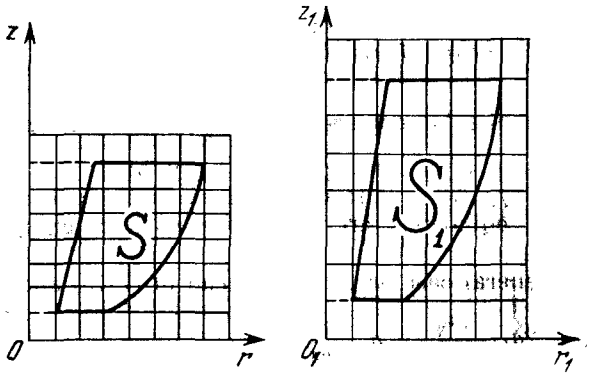

Fig. 99

Sometimes, depending on the elastic properties and the shape of the section, it is more convenient to use curvilinear co-ordinates, and in particular spherical co-ordinates. We give basic formulas and equations in spherical coordinates for the torsion of a homogeneous body having spherical anisotropy.

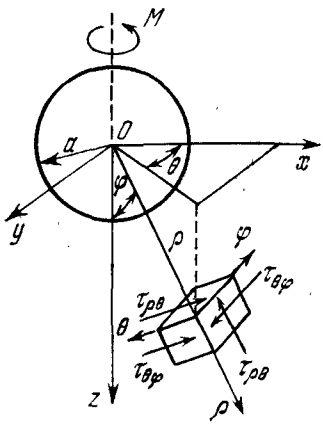

Fig. 100

The spherical co-ordinates ρ, φ, θ of a point are the distance of the point from the origin of co-ordinates or the pole, the angle formed by the radius vector with the z axis, and the angle formed by the projection of the radius vector on the xy plane with the polar axis x (Fig. 100). The relation between spherical and cylindrical co-ordinates is as follows:

$$r = \rho \sin \varphi, \quad z = \rho \cos \varphi, \quad \theta = \theta. \tag{73.7}$$

The only non-vanishing component of displacement is denoted, as before, by $v(\rho, \varphi)$. The equations will involve stresses on planes normal to the co-ordinate directions ρ, φ, θ; the only non-zero components are $\tau_{\theta\varphi}$ and $\tau_{\rho\theta}$. Taking this into account, we write down the expressions for the strain components and the equilibrium equation for a continuous medium quoted from Love's book [29] (pp. 56, 91):

$$\left.\begin{aligned} &\varepsilon_\rho = \varepsilon_\varphi = \varepsilon_\theta = \gamma_{\rho\varphi} = 0, \\ &\gamma_{\rho\theta} = \frac{\partial v}{\partial \rho} - \frac{v}{\rho}, \quad \gamma_{\varphi\theta} = \frac{1}{\rho}\frac{\partial v}{\partial \varphi} - \cot\varphi\,\frac{v}{\rho}, \end{aligned}\right\} \tag{73.8}$$

$$\left.\begin{aligned} &\frac{\partial \tau_{\rho\theta}}{\partial \rho} + \frac{1}{\rho}\frac{\partial \tau_{\varphi\theta}}{\partial \varphi} + \frac{3\tau_{\rho\theta}}{\rho} + \frac{2\tau_{\varphi\theta}}{\rho}\cot\rho = 0, \\ &\sigma_\rho = \sigma_\varphi = \sigma_\theta = \tau_{\rho\varphi} = 0. \end{aligned}\right\} \tag{73.9}$$

The generalized Hooke's law for a spherically anisotropic orthotropic body is expressed by the equations

$$\tau_{\rho\theta} = G_{\rho\theta}\gamma_{\rho\theta}, \quad \tau_{\varphi\theta} = G_{\varphi\theta}\gamma_{\varphi\theta}. \tag{73.10}$$

Substituting these expressions in (73.9), we obtain an equation for v:

$$g_s\left(\frac{\partial^2 v}{\partial \rho^2} + \frac{2}{\rho}\frac{\partial v}{\partial \rho}\right) + 2(1 - g_s)\frac{v}{\rho^2} + \\ + \frac{1}{\rho^2}\frac{\partial}{\partial \varphi}\left(\frac{\partial v}{\partial \varphi} + \cot\varphi v\right) = 0. \tag{73.11}$$

Here g_s denotes the ratio of the shear moduli:

$$g_s = \frac{G_{\rho\theta}}{G_{\varphi\theta}}. \tag{73.12}$$

The equation for ψ is not given since it is not used in the following discussion.

74. Torsion of a Curvilinearly Anisotropic Cone

The problem of the torsion of a homogeneous isotropic body in the form of a truncated cone, solid or hollow, is investigated in detail in [4]. The torsion of an anisotropic

cone (with anisotropy of a special kind) subjected to a torque applied at the vertex is considered in the author's works [79], [26], [28].

We shall show how the solution of the problem is derived for a homogeneous body, and just make some remarks concerning the solution for a non-homogeneous body.

Let an elastic body of length l be given, bounded externally and internally by the surfaces of circular cones with a

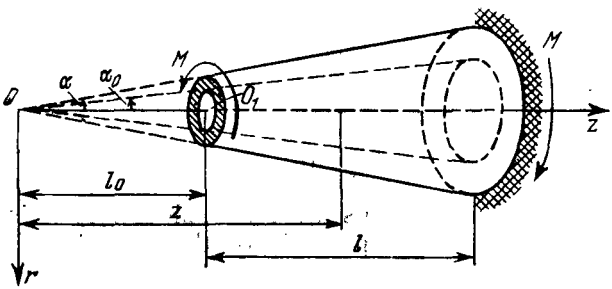

Fig. 101

common axis and a common vertex (conical hollow bar, not necessarily thin-walled) and by two plane end surfaces normal to the axis. The body has anisotropy of a special kind, namely at each point there is a plane of elastic symmetry normal to the axis of revolution (or parallel to the planes of the cross sections). Let the common vertex of the conical surfaces be taken as the origin of co-ordinates, with the z axis of a cylindrical co-ordinate system directed along the common axis of the conical surfaces, and r directed arbitrarily (normal to z; Fig. 101). The generalized Hooke's law equations for this body are of the form of (72.1); they contain 13 (12) elastic constants a_{ij}. Suppose that one end (for example, the one of larger area) is fixed in a certain way, and the other is acted on by distributed external forces. The law of distribution of the forces is not given, but a twisting moment M, to which they reduce, is prescribed. If the problem is solved by using the stress function ψ, this function must satisfy Eq. (73.1), the bounda-

ry conditions

$$\begin{aligned} \psi &= c_1 = \text{constant when } r = z \tan \alpha, \\ \psi &= c_2 = \text{constant when } r = z \tan \alpha_0, \end{aligned} \tag{74.1}$$

and the condition at any cross section and at the ends:

$$\psi (z \tan \alpha,\ z) - \psi (z \tan \alpha_0,\ z) = \frac{M}{2\pi}. \tag{74.2}$$

Here α and α_0 are the angles of inclination of the generators of the outer and inner surfaces to the z axis ($\alpha_0 < \alpha$); the twisting moment M is a constant. Conditions (74.1) and (74.2) will be satisfied if a solution of Eq. (72.1) is found in the form of a function of the ratio $t = r/z$, i.e.,

$$\psi = f(t). \tag{74.3}$$

Substituting (74.3) in Eq. (72.1), we obtain an ordinary equation, which is easily solvable:

$$(1 + 2mt + n^2t^2) f''(t) + \left(-\frac{3}{t} - m + 2n^2t\right) f'(t) = 0 \tag{74.4}$$

$$\left(m = \frac{a_{46}}{a_{44}},\ n = \sqrt{\frac{a_{66}}{a_{44}}}\right).$$

The general integral of (74.4) is given by

$$\psi = C\left[\frac{1+mt}{\varkappa} - \frac{(1+mt)^3}{3\varkappa^3}\right] + C_0 \quad (\varkappa = \sqrt{1 + 2mt + n^2t^2}). \tag{74.5}$$

By satisfying condition (74.2), which takes the form

$$f(\tan \alpha) - f(\tan \alpha_0) = \frac{M}{2\pi}, \tag{74.6}$$

we obtain

$$\psi = \frac{M}{2\pi N}\left[\frac{z+mr}{K} - \frac{(z+mr)^3}{3K^3}\right]; \tag{74.7}$$

$$\left.\begin{aligned} \tau_{\theta z} &= -\frac{M(n^2-m^2)^2}{2\pi N}\frac{rz}{K^5}, \\ \tau_{r\theta} &= -\frac{M(n^2-m^2)^2}{2\pi N}\frac{r^2}{K^5}, \end{aligned}\right\} \tag{74.8}$$

where

$$N = \frac{1+m\tan\alpha}{K_1} - \frac{(1+m\tan\alpha)^3}{3K_1^3} - \frac{1+m\tan\alpha_0}{K_0} + \\ + \frac{(1+m\tan\alpha_0)^3}{3K_0^3}, \qquad (74.9)$$

$$\left.\begin{aligned} K &= \sqrt{z^2+2mrz+n^2r^2}, \\ K_1 &= \sqrt{1+2m\tan\alpha+n^2\tan^2\alpha}, \\ K_0 &= \sqrt{1+2m\tan\alpha_0+n^2\tan^2\alpha_0}. \end{aligned}\right\} \qquad (74.10)$$

C_0 is a constant having no influence on the stresses and strains; it may be set equal to zero.

The displacement v is found by integrating the second and third equations of (72.5). The arbitrary constant resulting from integration is found by specifying the fixing conditions. Assuming that the outer circumference of the wider end $r = (l + l_0)\tan\alpha$ is fixed, we obtain, on determining the constant, an expression for the angle of rotation of a radius r of a section at a distance z from the vertex of the cones:

$$\omega(r, z) = \frac{M(n^2-m^2)^2}{6\pi N} a_{44}\left[\frac{1}{K^3} - \frac{1}{(l+l_0)^3 K_1^3}\right]. \qquad (74.11)$$

Since ω is a function of two variables, r and z, it is necessary to specify what we imply by the total angle of twist. It may be taken, for example, that the total angle of twist $\omega_{\max}$ is the angle turned through by the outer circumference of the free end (its radius is $l_0\tan\alpha$). We obtain

$$\omega_{\max} = \frac{M(n^2-m^2)^2 a_{44} l}{6\pi N} \frac{3l_0(l+l_0)+l^2}{l_0^3(l+l_0)^2} \frac{1}{K_1^3}. \qquad (74.12)$$

For a solid non-orthotropic cone, $\alpha_0 = 0$, $K_0 = 1$,

$$N = \frac{1+m\tan\alpha}{K_1} - \frac{(1+m\tan\alpha)^3}{3K_1^3} - \frac{2}{3}. \qquad (74.13)$$

In the case of an orthotropic cone we must set $m = 0$, $n = \sqrt{g}$ throughout; consequently,

$$K = \sqrt{z^2+gr^2}, \quad K_1 = \sqrt{1+g\tan^2\alpha}, \quad K_0 = \sqrt{1+g\tan^2\alpha_0}. \qquad (74.14)$$

Setting $m = 0$, $n = 1$, $g = 1$ in all formulas, we obtain the wellknown solution for an isotropic body.

If a cone has cylindrical anisotropy but is continuously non-homogeneous, i.e., its shear moduli are continuous differentiable functions of the co-ordinates r and z, it is possible to indicate a number of cases where the solution of the torsion problem is rather easily found. Below are given two such cases (the solutions for them are available in the author's book [28]):

(1) the shear moduli are arbitrary functions of the ratio $t = r/z$; in particular,

$$G_1 = g_1 t^n, \quad G_3 = g_3 t^n, \tag{74.15}$$

where n is any real number;

(2) the shear moduli are given by the expressions

$$G_1 = g_1 \left(\frac{r}{b}\right)^p \left(\frac{z}{l+l_0}\right)^q, \quad G_3 = g_3 \left(\frac{r}{b}\right)^p \left(\frac{z}{l+l_0}\right)^q \tag{74.16}$$

(p, q are real numbers).

Note that for a homogeneous cone having spherical anisotropy, when the origin of co-ordinates is at the vertex of the conical surface and the z axis is directed along the geometrical axis, the solution is quite elementary:

$$\tau_{\rho\theta} = C \frac{\sin \varphi}{\rho^3}, \tag{74.17}$$

the other components are zero; C is determined from the equilibrium condition.

75. Effect of a Spherical and a Spheroidal Inclusion or Cavity on the Stress Distribution in a Twisted Bar

As shown in Chap. 4, a circular or an elliptical inclusion of different material in a plate that is in plane stress under given forces distorts the stress field. The same phenomenon is also observed in the case when there is a hole, and not an inclusion, in a plate; the stresses near the hole are higher than in a solid plate subjected to the same forces, or, in other words, there is a concentration of stress. A distortion of the stress field is also observed in a body that is in a

three-dimensional state of stress and contains inclusions of dissimilar material or cavities in the form of bodies of three dimensions.

We shall consider the simplest cases of a circular cylinder of radius R that has a spherical inclusion or a cavity on the axis of revolution and is in elastic equilibrium under twisting moments M applied at the ends. All problems of this kind will be solved approximately: the cylinder is considered as an infinite elastic space with an inclusion or a cavity, and the stresses are sought so that they will exactly satisfy the conditions on the surface of the inclusion or cavity and tend, with increasing distance from them, to the stresses in a cylinder twisted by the moments M.

The simplest case is that of an isotropic cylinder with a spherical inclusion on the axis made of a material with spherical anisotropy and orthotropic. The centre of the sphere is taken as the origin of a spherical co-ordinate system ρ, φ, θ, related to a cylindrical system r, θ, z, in which the g axis is directed along the geometrical axis of the cylinder (see Fig. 100). The stresses and displacements in the cylinder will be denoted by the superscript (1), and in the inclusion by the superscript (2). Let the radius of the inclusion be denoted by a, its shear moduli referred to the spherical co-ordinate system by $G_{\varphi\theta}$, $G_{\rho\theta}$, and the shear modulus of the cylinder by G. We proceed to find an approximate solution (see [64]).

In a solid cylinder we have the stresses

$$\tau_{\theta z}^{(1)} = \frac{2M}{\pi R^4} r, \quad \tau_{r\theta}^{(1)} = 0, \tag{75.1}$$

the displacement and the angle of twist per unit length

$$v^{(1)} = \vartheta z r, \quad \vartheta = \frac{2M}{G\pi R^4} \tag{75.2}$$

(to within a rigid-body displacement, i.e., a rotation about the z axis). For the inclusion, the generalized Hooke's law equations are

$$\tau_{\rho\theta}^{(2)} = G_{\rho\theta}\gamma_{\rho\theta}^{(2)}, \quad \tau_{\varphi\theta}^{(2)} = G_{\varphi\theta}\gamma_{\varphi\theta}^{(2)} \tag{75.3}$$

and the equation for the displacement is [see (73.10) and (73.11)]

$$g_s\left(\frac{\partial^2 v^{(2)}}{\partial\rho^2}+\frac{2}{\rho}\frac{\partial v^{(2)}}{\partial\rho}\right)+2(1-g_s)\frac{v^{(2)}}{\rho^2}+$$
$$+\frac{1}{\rho^2}\frac{\partial}{\partial\varphi}\left(\frac{\partial v^{(2)}}{\partial\varphi}+\cot\varphi\cdot v^{(2)}\right)=0 \qquad (75.4)$$
$$(g_s=G_{\rho\theta}/G_{\varphi\theta}).$$

The conditions on the surface of contact between the inclusion and cavity are of the form (for the case when no slipping is possible over the surface of contact between the cavity and core)

$$v^{(2)}=v^{(1)}, \quad \tau_{\rho\theta}^{(2)}=\tau_{\rho\theta}^{(1)}. \qquad (75.5)$$

The stresses inside the inclusion must be finite, and the displacements must tend, with increasing distance from the inclusion, to those in a solid cylinder:

$$v^{(1)}\to\vartheta zr=\frac{\vartheta}{2}\rho^2\sin 2\varphi. \qquad (75.6)$$

Taking into account condition (75.6), the solution of Eq. (75.4) is sought in the form

$$v^{(2)}=f(\rho)\sin 2\varphi. \qquad (75.7)$$

We obtain an elementary function:

$$v^{(2)}=(A_2\rho^{n-0.5}+B_2\rho^{-n-0.5})\sin 2\varphi, \qquad (75.8)$$

where

$$n=0.5\sqrt{9+16g_s}. \qquad (75.9)$$

The constant B_2 must be rejected since otherwise the stresses at the centre of the inclusion will have a singularity. Consequently,

$$v^{(2)}=A_2\rho^{n-0.5}\sin 2\varphi; \qquad (75.10)$$

$$\left.\begin{aligned}\tau_{\rho\theta}^{(2)}&=G_{\rho\theta}(n-1.5)A_2\rho^{n-1.5}\sin 2\varphi,\\ \tau_{\varphi\theta}^{(2)}&=-2G_{\varphi\theta}\rho^{n-1.5}\sin^2\varphi.\end{aligned}\right\} \qquad (75.11)$$

The displacements and stresses in an isotropic cylinder are obtained from (75.8) and (75.9) by putting $g_s=1$.

Then $n = 2.5$ and

$$v^{(1)} = (A_1\rho^2 + B_1\rho^{-3}) \sin 2\varphi; \tag{75.12}$$

$$\left.\begin{aligned} \tau_{\rho\theta}^{(1)} &= G\left(A_1\rho - \frac{4B_1}{\rho^4}\right) \sin 2\varphi, \\ \tau_{\varphi\theta}^{(1)} &= -2G\left(A_1\rho + \frac{B_1}{\rho^4}\right) \sin^2\varphi. \end{aligned}\right\} \tag{75.13}$$

The constants A_1, B_1, and A_2 are determined from the conditions (75.5) and (75.6). The final formulas are

$$v^{(2)} = \frac{5M}{G\pi R^4} \frac{a^{2.5-n}\rho^{n-0.5}}{4+g_2(n-1.5)} \sin 2\varphi; \tag{75.14}$$

$$\left.\begin{aligned} \tau_{\rho\theta}^{(2)} &= \frac{5M}{\pi R^4} \frac{g_2(n-1.5)\, a^{2.5-n}\rho^{n-1.5}}{4+g_2(n-1.5)} \sin 2\varphi, \\ \tau_{\varphi\theta}^{(2)} &= -\frac{10M}{\pi R^4} \frac{g_1 a^{2.5-n}\rho^{n-1.5}}{4+g_2(n-1.5)} \sin^2\varphi; \end{aligned}\right\} \tag{75.15}$$

$$v^{(1)} = \frac{M}{G\pi R^4}\left(\rho^2 + \lambda\frac{a^5}{\rho^3}\right) \sin 2\varphi; \tag{75.16}$$

$$\left.\begin{aligned} \tau_{\rho\theta}^{(1)} &= \frac{M}{\pi R^4}\left(\rho - 4\lambda\frac{a^5}{\rho^4}\right) \sin 2\varphi, \\ \tau_{\varphi\theta}^{(1)} &= -\frac{2M}{\pi R^4}\left(\rho + \lambda\frac{a^5}{\rho^4}\right) \sin^2\varphi. \end{aligned}\right\} \tag{75.17}$$

Here we have used the notation:

$$g_1 = \frac{G_{\varphi\theta}}{G}, \quad g_2 = \frac{G_{\rho\theta}}{G}, \quad \lambda = \frac{1-g_2(n-1.5)}{4+g_2(n-1.5)}. \tag{75.18}$$

The maximum value of $\tau_{\rho\theta}^{(1)}$ occurs at the surface of the inclusion at the points $\varphi = \pi/4$, and the maximum value of $\tau_{\varphi\theta}^{(1)}$ at the equator at the points $\varphi = \pi/2$:

$$(\tau_{\rho\theta}^{(1)})_{\max} = \frac{5Ma}{\pi R^4} \frac{(n-1.5)\, g_2}{4+g_2(n-1.5)}; \tag{75.19}$$

$$(\tau_{\varphi\theta}^{(1)})_{\max} = \frac{10Ma}{\pi R^4} \frac{1}{4+g_2(n-1.5)}. \tag{75.20}$$

The solution for the case of the torsion of a cylinder with a spherical cavity is obtained from (75.17) by setting $g_2 = 0$:

$$\left.\begin{aligned} \tau_{\rho\theta}^{(1)} &= \frac{M}{\pi R^4}\left(\rho - \frac{a^5}{\rho^4}\right) \sin 2\varphi, \\ \tau_{\varphi\theta}^{(1)} &= -\frac{2M}{\pi R^4}\left(\rho + 0.25\frac{a^5}{\rho^4}\right) \sin^2\varphi. \end{aligned}\right\} \tag{75.21}$$

The maximum stress in the cylinder as obtained from the last formula is

$$\tau_{max} = \frac{2Ma}{\pi R^4} 1.25. \tag{75.22}$$

On comparing this expression with (75.1), we obtain the stress concentration factor in an isotropic cylinder with a spherical cavity on its axis under torsion:

$$k = 1.25.$$

By setting $g_2 = \infty$ in (75.16) to (75.18), we obtain the stress distribution in an isotropic cylinder with an absolutely rigid spherical inclusion on its axis:

$$\left.\begin{aligned} \tau_{\rho\theta}^{(1)} &= \frac{M}{\pi R^4}\left(\rho + \frac{4a^5}{\rho^4}\right)\sin 2\varphi, \\ \tau_{\varphi\theta}^{(1)} &= \frac{2M}{\pi R^4}\left(-\rho + \frac{a^5}{\rho^4}\right)\sin^2\varphi. \end{aligned}\right\} \tag{75.23}$$

On the surface of the rigid inclusion

$$(\tau_{\rho\theta}^{(1)})_{\rho=a} = 2.5\frac{2Ma}{\pi R^4}\sin 2\varphi, \quad (\tau_{\varphi\theta}^{(1)})_{\rho=a} = 0; \tag{75.24}$$

$$\tau_{max} = \frac{2Ma}{\pi R^4} 2.5. \tag{75.25}$$

The maximum stress in a cylinder with an absolutely rigid inclusion is twice that in a similar cylinder with a spherical cavity on its axis.

S.C. Das [62] has solved the torsion problem for an isotropic cylinder with an inclusion in the form of an oblong ellipsoid of revolution (Fig. 102*a*), a sphere, and an oblate ellipsoid of revolution (Fig. 102*b*). The solutions for cylinders with rigid inclusions are found as special cases. S.C. Das has calculated the stress concentration factors, i.e., the ratios of the maximum stress on the contact surface to the stress at the same points of a cylinder with no inclusion for several ratios of the semiaxes b/a and of the shear modulus G' of the inclusion to the shear modulus of the cylinder. Below is a table taken from the cited paper (Table 23).

From this short table it may be noticed that the stress concentration factor increases with increasing torsional

Stress Concentration Factors in an Isotropic Cylinder with an Isotropic Inclusion Table 23

G'/G	0.25	4	∞
Oblong ellipsoid, $d=0.866$	0.28	2.8	7.0
Sphere, $d=1$	0.3	2.5	5.0
Oblate ellipsoid, $d=1.15$	0.36	1.8	2.5

rigidity, i.e., with increasing ratio G'/G, and decreases with increasing ratio $d = b/a$ of the semiaxes of the ellipsoid.

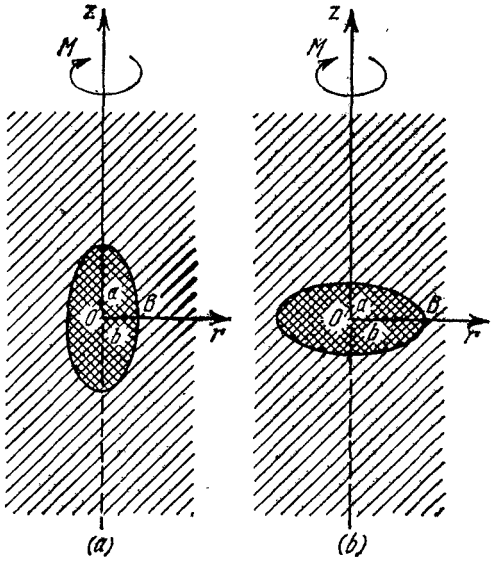

Fig. 102

Problems of this kind have also been solved for several special cases of the anisotropy of a cylinder and an inclusion. We list some of these:

S.C. Bose [58] and [57] (a transversely isotropic cylinder and an isotropic inclusion in the form of a sphere or an ellipsoid of revolution);

S.C. Bose [56] (a transversely isotropic cylinder and a spherical inclusion of material with spherical anisotropy);

S.K. Bhowmick [53], R. Subramaniam [124] (an isotropic cylinder with an elastic inclusion having curvilinear anisotropy of a special kind);

P.P. Chattarji [59] (a transversely isotropic cylinder with a rigid spherical inclusion);

S.K. Bhowmick [54] (a transversely isotropic cylinder, an ellipsoidal inclusion).

There are other works on this subject, but we shall not mention them here (see [28]).

76. Exact Solution of the Torsion Problem for a Circular Cylinder

The torsion problems for bars considered in Chap. 6 have all been solved approximately: the boundary conditions on the lateral surface are satisfied exactly, and those at the ends approximately. The tangential forces on the end surfaces are not specified, but they must reduce to prescribed twisting moments. However, for a circular cylinder of finite length, hollow or solid, homogeneous or non-homogeneous, it is possible to obtain an exact solution (at least, for special cases of anisotropy and non-homogeneity), i.e., to find the stresses corresponding to tangential twisting forces distributed over the ends according to a given law when the lateral surface and the surface of a cavity (if any) are not loaded or fixed.

We proceed to derive this solution. Let a circular cylinder of finite length be given, and let the cylinder be, in general, hollow and have cylindrical anisotropy with an axis directed along the geometrical axis. The cylinder is assumed to be orthotropic but non-homogeneous; its shear moduli $G_{\theta z} = G_1(r)$, $G_{r\theta} = G_3(r)$ are functions of one co-ordinate, r, the distance from a given point to the geometrical axis. Let the body be referred to a cylindrical co-ordinate system; the centre of either of the ends is taken as the origin, and the geometrical axis as the z axis; l is the length, b and a are the radii of the cross section (the outer radius and the radius of the cavity). Of all the various cases of loading we

shall consider only two: (1) both ends are loaded by identical tangential forces normal to the radii and prescribed as functions of r (such forces obviously reduce at each end to twisting moments that are opposite in sense and mutually balanced); (2) one end is rigidly fixed (so that each of its points remains stationary), and the other is loaded by tangential forces reducing to a twisting moment and prescribed as functions of r (Fig. 103).

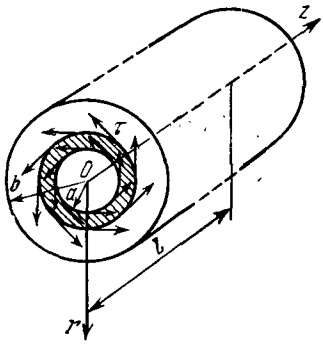

Fig. 103

In the case of a non-homogeneous orthotropic body the stresses are expressed in terms of the stress function ψ satisfying a second-order equation with variable coefficients [we rewrite (72.8) and (72.14)]:

$$\tau_{\theta z} = \frac{1}{r^2}\frac{\partial\psi}{\partial r}, \quad \tau_{r\theta} = -\frac{1}{r^2}\frac{\partial\psi}{\partial z}; \tag{76.1}$$

$$\frac{\partial}{\partial r}\left(\frac{1}{r^3 G_1}\frac{\partial\psi}{\partial r}\right) + \frac{1}{r^3 G_3}\frac{\partial^2\psi}{\partial z^2} = 0. \tag{76.2}$$

The procedure for the solution of the problem is as follows. The solution of Eq. (76.2) permitting a satisfaction of the conditions on the cylindrical surfaces, i.e., that when $r = b$ and $r = a$

$$\tau_{r\theta} = 0, \tag{76.3}$$

is sought in the form of a product:

$$\psi = R(r)\, Z(z). \tag{76.4}$$

Substituting (76.4) in (76.2), and separating the variables, we obtain

$$\frac{Z''(z)}{Z(z)} = -\frac{r^3 G_3(r)}{R(r)}\left[\frac{R'(r)}{r^3 G_1(r)}\right]' = \frac{\lambda^2}{b^2 g} = \text{constant}. \tag{76.5}$$

From this we obtain two (ordinary) equations, namely

$$Z'' - \left(\frac{\lambda}{b\sqrt{g}}\right)^2 Z = 0; \tag{76.6}$$

$$\left(\frac{R'}{r^3 G_1}\right)' + \left(\frac{\lambda}{b\sqrt{g}}\right)^2 \frac{R}{r^3 G_3} = 0. \tag{76.7}$$

In Eq. (76.5) g is a positive constant, which may be prescribed arbitrarily, and λ is another constant, which must be determined. The general solutions of Eqs. (76.6) and (76.7) are of the form (when $\lambda \neq 0$)

$$Z = A \cosh \frac{\lambda z}{b\sqrt{g}} + B \sinh \frac{\lambda z}{b\sqrt{g}}; \tag{76.8}$$

$$R = C_1 R_1 (r, \lambda) + C_2 R_2 (r, \lambda). \tag{76.9}$$

When $\lambda = 0$,

$$Z = Az + B. \tag{76.10}$$

$$R = C_1 \int G_1 r^3 \, dr + C_2. \tag{76.11}$$

Linearly independent solutions R_1 and R_2 for $\lambda \neq 0$ can, of course, be found explicitly only by prescribing the functions $G_1(r)$ and $G_3(r)$.

Suppose that the functions G_1 and G_3 are given, and R_1, R_2 are determined. We require that each solution (76.4) should satisfy conditions (76.3) on the free surfaces (or the condition $v = 0$ on the rigidly fixed surfaces). We then obtain a system of first-degree homogeneous equations for the constants C_1 and C_2; by equating its determinant to zero, we obtain an equation that is satisfied by λ, namely $\Delta(\lambda) = 0$. From this we obtain the eigenvalues λ $(\lambda_1, \lambda_2, \ldots, \lambda_m, \ldots)$ to which correspond the eigenfunctions R_m; they are determined to within a constant factor. The constant factor may be incorporated in A or B, or, what is the same thing, set equal to unity. The expression for ψ is then written as the sum

$$\psi = R_0 (A_0 z + B_0) + \sum_{m=1}^{\infty} R_m (r) (A_m \cosh \alpha_m z + B_m \sinh \alpha_m z), \tag{76.12}$$

where

$$\alpha_m = \frac{\lambda_m}{b\sqrt{g}}. \tag{76.13}$$

To satisfy the conditions at the ends loaded by identical forces, it is necessary to represent these given forces as a series:

$$\frac{1}{r^2}\left[a_0 R_0'(r) + \sum_{m=1}^{\infty} a_m R_m'(r)\right] \qquad \left(R_0' = \frac{dR_0}{dr},\ R_m' = \frac{dR_m}{dr}\right). \tag{76.14}$$

If this can be done, we obtain, from the end conditions, two non-homogeneous equations for each m, which are satisfied by A_m and B_m, and determine the stress function and the stresses themselves as series.

If a cylinder has no cavity, i.e., it is solid, we must try to reject, in expressions (76.9) and (76.11), terms that increase indefinitely as the axis is approached.

The problem is solved in the same way when a displacement (equal to zero) is prescribed on the outer surface and on the surface of a cavity, or when a stress is prescribed on one cylindrical surface and a displacement on the other. Of course, in both cases a displacement v must be found corresponding to the stress function ψ by integration of Eqs. (72.13).

77. Torsion of a Cylinder in Which the Shear Moduli Vary Directly As a Power of the Distance r (Exact Solution)

One of the simplest cases is that when the shear moduli vary over the section in proportion to some power of the distance and do not vary along the length. In this case the general integral of Eq. (76.7) can be found explicitly.

Consider a solid cylinder in which the shear moduli are given as

$$G_1 = g_1\rho^n, \quad G_3 = g_3\rho^n, \tag{77.1}$$

where g_1, g_3 are factors having the dimensions of shear modulus, n is a real number, and $\rho = r/b$. Equation (76.7)

has a general integral expressible in terms of Bessel functions. Let the ratio of the shear moduli be denoted by g ($g = g_1/g_3$) and introduce the notation $\alpha = 1 + 0.5n$. By rejecting the functions giving singularities at the centre of the section in the expression for ψ (76.12), we obtain, for a solid cylinder (without a cavity),

$$\psi = \frac{\vartheta g_1}{2(\alpha+1)} \frac{r^{2\alpha+2}}{b^{2\alpha-2}} + \\ + \sum_{m=1}^{\infty} r^{\alpha+1} J_{\alpha+1}(\lambda_m \rho)(A_m \cosh \alpha_m z + B_m \sinh \alpha_m z); \quad (77.2)$$

$$\left.\begin{aligned} \tau_{\theta z} &= \frac{\vartheta g_1}{b^{2\alpha-2}} r^{2\alpha-1} + \\ &+ \frac{r^{\alpha-1}}{b} \sum_{m=1}^{\infty} \lambda_m J_\alpha(\lambda_m \rho)(A_m \cosh \alpha_m z + B_m \sinh \alpha_m z), \\ \tau_{r\theta} &= -\frac{r^{\alpha-1}}{b\sqrt{g}} \sum_{m=1}^{\infty} \lambda_m J_{\alpha+1}(\lambda_m \rho) \times \\ &\qquad \times (A_m \sinh \alpha_m z + B_m \cosh \alpha_m z); \end{aligned}\right\} \quad (77.3)$$

$$v = \vartheta z r + \omega_3 r + \\ + \frac{b^{2\alpha-2} r^{1-\alpha}}{\sqrt{g_1 g_3}} \sum_{m=1}^{\infty} J_\alpha(\lambda_m \rho)(A_m \sinh \alpha_m z + B_m \cosh \alpha_m z). \quad (77.4)$$

The constant ω_3 is determined from the condition at the middle cross section or at the fixed end.

Consider two basic cases.

Case 1. Both ends are loaded by identical twisting tangential forces $\tau(\rho)$ distributed along the radii according to a given law. The end conditions are: when $z = 0$ and $z = l$,

$$\tau_{\theta z} = \tau(\rho). \quad (77.5)$$

By multiplying this equality by $\rho^{1-\alpha}$, and expanding the function $\tau\rho^{1-\alpha}$ in a Dini-Bessel series, we obtain

$$\tau\rho^{1-\alpha} = a_0 \rho^\alpha + \sum_{m=1}^{\infty} a_m J_\alpha(\lambda_m \rho), \quad (77.6)$$

where λ_m are the consecutive roots of the Bessel function of the first kind of order $\alpha + 1$, i.e., $J_{\alpha+1}(x)$. The coefficients a_0, a_m are determined by the formulas*

$$\left.\begin{aligned} a &= (2\alpha+2)\int_0^1 \tau\rho^{\alpha+1}\,d\rho, \\ a_m &= \frac{2\lambda_m^2}{(\lambda_m^2-a^2)\,J_\alpha^2(\lambda_m)+\lambda_m^2 J_\alpha^2(\lambda_m)}\int_0^1 \tau\rho J_\alpha(\lambda_m\rho)\,d\rho. \end{aligned}\right\} \tag{77.7}$$

Consequently, when $z=0$ and $z=l$,

$$\tau_{\theta z} = a_0\rho^{2\alpha-1} + \rho^{\alpha-1}\sum_{m=1}^{\infty} \alpha_m J_\alpha(\lambda_m\rho). \tag{77.8}$$

By satisfying the boundary conditions (77.5), we determine the constants A_m, B_m, and by formulas (77.3) and (77.4) the stresses and the displacement v:

$$\left.\begin{aligned} \tau_{\theta z} &= a_0\rho^{2\alpha-1}+\rho^{\alpha-1}\sum_{m=1}^{\infty} a_m J_\alpha(\lambda_m\rho)\frac{\cosh\alpha_m(z-0.5l)}{\cosh 0.5\alpha_m l}, \\ \tau_{r\theta} &= -\frac{\rho^{\alpha-1}}{\sqrt{g}}\sum_{m=1}^{\infty} a_m J_{\alpha+1}(\lambda_m\rho)\frac{\sinh\alpha_m(z-0.5l)}{\cosh 0.5\alpha_m l}; \end{aligned}\right\} \tag{77.9}$$

$$v = \frac{a_0}{g}(z-0.5l)\rho + \\ + \frac{b}{\sqrt{g_1 g_3}}\rho^{1-\alpha}\sum_{m=1}^{\infty}\frac{a_m}{\lambda_m}J_\alpha(\lambda_m\rho)\frac{\sinh\alpha_m(z-0.5l)}{\cosh 0.5\alpha_m l} \tag{77.10}$$

Here

$$a_m = \frac{\lambda_m}{b\sqrt{g}}, \quad \frac{a_0}{g_1} = \vartheta b. \tag{77.11}$$

The middle section may be considered stationary; the constant ω_3 has been determined from this condition.

Case 2. One end, $z = 0$, is loaded by given forces, and the other end, $z = l$, is completely fixed (the displacement

* See, for example, the book by G. N. Watson [39], p. 580.

of each of its points is zero). The formulas for the stresses and displacement are obtained from (77.9) and (77.10) by replacing l by $2l$ throughout.

By setting $n = 0$ throughout, we obtain formulas for a homogeneous cylinder with constant moduli G_1, G_3. In this case λ_m are the roots of the Bessel function of the second order, i.e., $J_2(x)$. The stress $\tau_{\theta z}$ and the displacement v are represented by series in the Bessel functions of the first order, and $\tau_{r\theta}$ in the Bessel functions of the second order.

The solutions for a homogeneous orthotropic cylinder can also be obtained from that for an isotropic cylinder (for details, see [28], Sec. 47).

AXIALLY SYMMETRIC DEFORMATION OF A TRANSVERSELY ISOTROPIC BODY OF REVOLUTION

Chapter 9

This last chapter is concerned with the second type of state of stress and strain under which a body of revolution, while deforming, remains a body of revolution; in this case the deformation is said to be axially symmetric. The theory of axially symmetric deformation has been thoroughly developed only for an isotropic body and a body having anisotropy of a special kind, namely a transversely isotropic body. In this chapter we shall always assume that the body under consideration is transversely isotropic; the formulas for an isotropic body are obtained from those for a transversely isotropic body as special cases.

78. General Equations for Axially Symmetric Deformation. Stress Function

Imagine a body of an elastic homogeneous transversely isotropic material bounded by one or several coaxial surfaces of revolution, which is in equilibrium under external surface and body forces. Suppose that the planes of isotropy passing through each point of the body are normal to its geometrical axis (the axis of revolution), and the force distribution has rotational symmetry about the same axis.

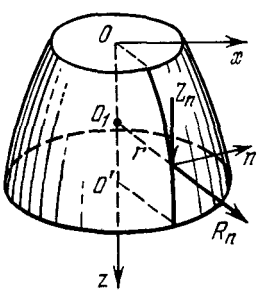

Fig. 104

Let the body be referred to a cylindrical co-ordinate system r, θ, z, with the origin placed at some point on the geometrical axis (for example, at the centre of the extreme section), the z axis directed along this axis, and the polar x axis directed arbit-

rarily in the plane of the cross section (Fig. 104). Let the projections of the surface forces on the co-ordinate directions r, z be denoted by R_n, Z_n, and the projections of the body forces by R, Z ($\Theta_n = \Theta = 0$). As usual, the surface forces are referred to unit area, and the body forces to unit volume. The generalized Hooke's law equations are written as in a Cartesian system [see (4.8)], namely

$$\left.\begin{aligned} \varepsilon_r &= a_{11}\sigma_r + a_{12}\sigma_\theta + a_{13}\sigma_z, \\ \varepsilon_\theta &= a_{12}\sigma_r + a_{11}\sigma_\theta + a_{13}\sigma_z, \\ \varepsilon_z &= a_{13}(\sigma_r + \sigma_\theta) + a_{33}\sigma_z, \\ \gamma_{\theta z} &= a_{44}\tau_{\theta z}, \quad \gamma_{rz} = a_{44}\tau_{rz}, \\ \gamma_{r\theta} &= 2(a_{11} - a_{12})\tau_{r\theta}. \end{aligned}\right\} \tag{78.1}$$

We have altogether five independent elastic constants. By solving (78.1) for the stress components, we obtain the generalized Hooke's law equations in an alternate form:

$$\left.\begin{aligned} \sigma_r &= A_{11}\varepsilon_r + A_{12}\varepsilon_\theta + A_{13}\varepsilon_z, \\ \sigma_\theta &= A_{12}\varepsilon_r + A_{11}\varepsilon_\theta + A_{13}\varepsilon_z, \\ \sigma_z &= A_{13}(\varepsilon_r + \varepsilon_\theta) + A_{33}\varepsilon_z, \\ \tau_{\theta z} &= A_{44}\gamma_{\theta z}, \quad \tau_{rz} = A_{44}\gamma_{rz}, \\ \tau_{r\theta} &= \frac{1}{2}(A_{11} - A_{12})\gamma_{r\theta}. \end{aligned}\right\} \tag{78.2}$$

By expressing the coefficients A_{ij} in terms of a_{ij}, we have

$$\left.\begin{aligned} A_{11} &= \frac{a_{11}a_{33} - a_{13}^2}{(a_{11} - a_{12})m}, \quad A_{12} = \frac{a_{13}^2 - a_{12}a_{33}}{(a_{11} - a_{12})m}, \\ A_{13} &= -\frac{a_{13}}{m}, \qquad A_{33} = \frac{a_{11} + a_{12}}{m}, \\ A_{44} &= \frac{1}{a_{44}}, \quad A_{11} - A_{12} = \frac{1}{a_{11} - a_{12}}. \end{aligned}\right\} \tag{78.3}$$

Here

$$m = (a_{11} + a_{12})a_{33} - 2a_{13}^2. \tag{78.4}$$

The strain coefficients a_{ij} and the elastic moduli A_{ij} may also be expressed in terms of the engineering constants

[see (4.9)]:

$$\left.\begin{aligned} &a_{11}=\frac{1}{E}, \quad a_{12}=-\frac{\nu}{E}, \quad a_{33}=\frac{1}{E'}, \\ &a_{13}=-\frac{\nu'}{E'}, \quad a_{44}=\frac{1}{G'}, \\ &2(a_{11}-a_{12})=\frac{2(1+\nu)}{E}=\frac{1}{G}. \end{aligned}\right\} \tag{78.5}$$

where E, E' are Young's moduli for tension and compression in the plane of isotropy and in a direction perpendicular to it, ν is Poisson's ratio characterizing contraction in the plane of isotropy for tension in the same plane, ν' is Poisson's ratio characterizing contraction in a direction normal to the plane of isotropy for tension in this plane, $G = E/2\,(1+\nu)$, G' are the shear moduli for the planes of isotropy and perpendicular (radial) planes. The expressions for A_{ij} in terms of E, G, ν will not be given here.

Because of the symmetry of the force distribution and the elastic symmetry the radial sections remain plane and the body remains a body of revolution in the strained condition, i.e.,

$$u_r = u_r(r, z), \quad u_\theta = 0, \quad w = w(r, z). \tag{78.6}$$

It follows that $\gamma_{\theta z} = \gamma_{r\theta} = 0$ and $\tau_{\theta z} = \tau_{r\theta} = 0$; the other components of strain are independent of θ:

$$\varepsilon_r = \frac{\partial u_r}{\partial r}, \quad \varepsilon_\theta = \frac{u_r}{r}, \quad \varepsilon_z = \frac{\partial w}{\partial z}, \quad \gamma_{rz} = \frac{\partial u_r}{\partial z} + \frac{\partial w}{\partial r}. \tag{78.7}$$

The four non-zero components of stress satisfy two equilibrium equations:

$$\left.\begin{aligned} &\frac{\partial \sigma_r}{\partial r} + \frac{\partial \tau_{rz}}{\partial z} + \frac{\sigma_r - \sigma_\theta}{r} + R = 0, \\ &\frac{\partial \tau_{rz}}{\partial r} + \frac{\partial \sigma_z}{\partial z} + \frac{\tau_{rz}}{r} + Z = 0 \end{aligned}\right\} \tag{78.8}$$

(the third equation becomes an identity).

By adding to this the first, second, third, and fifth equations of the generalized Hooke's law (78.1) and (78.2), we obtain a system of six independent equations for determining the six independent functions, σ_r, σ_θ, σ_z, τ_{rz}, u_r, w.

Consider the case when there are no body forces, i.e.,

assume $R = Z = 0$. By eliminating the displacements u_r, w from the expressions for the strain components (78.7), we obtain

$$\left.\begin{aligned} \varepsilon_r - \frac{\partial}{\partial r}(r\varepsilon_\theta) = 0, \\ \frac{\partial^2 \varepsilon_r}{\partial z^2} + \frac{\partial^2 \varepsilon_z}{\partial r^2} - \frac{\partial^2 \gamma_{rz}}{\partial r\, \partial z} = 0. \end{aligned}\right\} \tag{78.9}$$

Substituting the expressions for the strains from Eqs. (78.1), we obtain

$$\left.\begin{aligned} & a_{11}\sigma_r + a_{12}\sigma_\theta + a_{13}\sigma_z - \frac{\partial}{\partial r}[r(a_{12}\sigma_r + a_{11}\sigma_\theta + a_{13}\sigma_z)] = 0, \\ & \frac{\partial^2}{\partial z^2}(a_{11}\sigma_r + a_{12}\sigma_\theta + a_{13}\sigma_z) + \\ & \quad + \frac{\partial^2}{\partial r^2}(a_{12}\sigma_r + a_{11}\sigma_\theta + a_{13}\sigma_z) - a_{44}\frac{\partial^2 \tau_{rz}}{\partial r\, \partial z} = 0. \end{aligned}\right\} \tag{78.10}$$

By adding to this Eqs. (78.8), we have four equations for four unknowns, the stress components.

The first equilibrium equation (when $R = 0$) and Eqs. (78.10) can be satisfied by introducing a stress function $\varphi(r, z)$, which is a generalization of the stress function for an isotropic body.* The expressions for the stresses in terms of φ for a transversely isotropic body are of the form

$$\left.\begin{aligned} \sigma_r &= -\frac{\partial}{\partial z}\left(\frac{\partial^2 \varphi}{\partial r^2} + \frac{b}{r}\frac{\partial \varphi}{\partial r} + a\frac{\partial^2 \varphi}{\partial z^2}\right), \\ \sigma_\theta &= -\frac{\partial}{\partial z}\left(b\frac{\partial^2 \varphi}{\partial r^2} + \frac{1}{r}\frac{\partial \varphi}{\partial r} + a\frac{\partial^2 \varphi}{\partial z^2}\right), \\ \sigma_z &= \frac{\partial}{\partial z}\left(c\frac{\partial^2 \varphi}{\partial r^2} + \frac{c}{r}\frac{\partial \varphi}{\partial r} + d\frac{\partial^2 \varphi}{\partial z^2}\right), \\ \tau_{rz} &= \frac{\partial}{\partial r}\left(\frac{\partial^2 \varphi}{\partial r^2} + \frac{1}{r}\frac{\partial \varphi}{\partial r} + a\frac{\partial^2 \varphi}{\partial z^2}\right), \end{aligned}\right\} \tag{78.11}$$

where

$$\left.\begin{aligned} a &= \frac{a_{13}(a_{11} - a_{12})}{a_{11}a_{13} - a_{13}^2}, \quad b = \frac{a_{13}(a_{13} + a_{44}) - a_{12}a_{33}}{a_{11}a_{33} - a_{13}^2}, \\ c &= \frac{a_{13}(a_{11} - a_{12}) + a_{11}a_{44}}{a_{11}a_{33} - a_{13}^2}, \quad d = \frac{a_{11}^2 - a_{12}^2}{a_{11}a_{33} - a_{13}^2}. \end{aligned}\right\} \tag{78.12}$$

* See, for example, Love's course [29], p. 275.

From the second equilibrium equation of (78.8) (when $Z = 0$) we obtain an equation for the stress function:

$$\left(\frac{\partial^2}{\partial r^2}+\frac{1}{r}\frac{\partial}{\partial r}\right)\left(\frac{\partial^2\varphi}{\partial r^2}+\frac{1}{r}\frac{\partial\varphi}{\partial r}+a\frac{\partial^2\varphi}{\partial z^2}\right)+$$
$$+\frac{\partial^2}{\partial z^2}\left(c\frac{\partial^2\varphi}{\partial r^2}+\frac{c}{r}\frac{\partial\varphi}{\partial r}+d\frac{\partial^2\varphi}{\partial z^2}\right)=0. \qquad (78.13)$$

Associated with the fourth-order differential equation (78.13) is the algebraic equation

$$ds^4-(a+c)s^2+1=0, \qquad (78.14)$$

whose roots are

$$\left.\begin{aligned} s_{1,3}&=\pm\sqrt{\frac{a+c+\sqrt{(a+c)^2-4d}}{2d}},\\ s_{2,4}&=\pm\sqrt{\frac{a+c-\sqrt{(a+c)^2-4d}}{2d}}.\end{aligned}\right\} \qquad (78.15)$$

By introducing the differential operators

$$\nabla_i^2=\frac{\partial^2}{\partial r^2}+\frac{1}{r}\frac{\partial}{\partial r}+\frac{1}{s_i^2}\frac{\partial^2}{\partial z^2} \quad (i=1,2). \qquad (78.16)$$

we can write Eq. (78.13) in a very simple form (see [26], and [79]):

$$\nabla_1^2\nabla_2^2\varphi=0. \qquad (78.17)$$

The operators ∇_1^2 and ∇_2^2 are interchangeable since it can easily be verified that $\nabla_1^2\nabla_2^2\varphi=\nabla_2^2\nabla_1^2\varphi$.

The following theorem can be proved for the numbers s_1 and s_2 depending on the elastic constants a_{ij}.

Theorem. *The numbers s_1 and s_2 for any transversely isotropic elastic body can only be real or complex (with a real part different from zero), but cannot be pure imaginary.*

This theorem is proved by the same method as Theorems 1 to 4 considered in Sec. 20. The expression for the elastic potential for a transversely isotropic body is written as

$$\overline{V}=\frac{1}{2}\left[a_{11}(\sigma_r^2+\sigma_\theta^2)+2a_{12}\sigma_r\sigma_\theta+a_{33}\sigma_z^2+\right.$$
$$\left.+2a_{13}(\sigma_r+\sigma_\theta)\sigma_z+a_{44}\tau_{rz}^2\right]. \qquad (78.18)$$

By assigning the stress values as

$$\left.\begin{aligned} \sigma_r = \frac{k^2}{N}, \quad \sigma_z = \frac{1}{N}, \quad \tau_{rz} = \frac{k}{N}, \\ \sigma_\theta = -\frac{1}{a_{11}N}(a_{12}k^2 + a_{13}), \end{aligned}\right\} \tag{78.19}$$

where k and N are arbitrary real numbers and $N \neq 0$, we obtain

$$\overline{V} = \frac{a_{11}a_{33} - a_{13}^2}{2a_{11}N^2}[dk^4 + (a+c)k^2 + 1]. \tag{78.20}$$

For all real k and N we have $\overline{V} > 0$. Since we always have $a_{11} > 0$, $a_{11}a_{33} - a_{13}^2 > 0$ (see [8], Part 1 or [50]), it follows that

$$dk^4 + (a + c)k^2 + 1 > 0 \tag{78.21}$$

for all real k, and hence the equation

$$d\mu^4 + (a + c)\mu^2 + 1 = 0 \tag{78.22}$$

cannot have real roots. But the parameters s_1 and s_2 are related to the roots of Eq. (78.22) μ_1 and μ_2 by the equalities

$$s_1 = -i\mu_1, \quad s_2 = -i\mu_2, \tag{78.23}$$

which can be verified by solving Eq. (78.22), and comparing the solution with (78.15); hence, they cannot be pure imaginary. The squares of the parameters s_i^2 and of the roots μ_i^2 can be real or complex numbers. This follows from formulas (78.23); they can also be pure imaginary (if the real part of μ_i is numerically equal to the imaginary part).

The boundary conditions in the case of prescribed forces R_n and Z_n on the lateral surface reduce to conditions on the meridians of the surface of revolution and are of the form

$$\left.\begin{aligned} \sigma_r \cos(n, r) + \tau_{rz} \cos(n, z) = R_n, \\ \tau_{rz} \cos(n, r) + \sigma_z \cos(n, z) = Z_n. \end{aligned}\right\} \tag{78.24}$$

When the displacements $g_1(s)$, $g_2(s)$ are prescribed on the surface, we have the conditions

$$u_r = g_1(s), \quad w = g_2(s). \tag{78.25}$$

In both cases the prescribed forces or displacements may be considered as functions of the arc length s of the meridian

of a radial section or of some other parameter determining the position of a point on this curve.

The equations and formulas for an isotropic body are obtained as a special case from the foregoing equations and formulas for a transversely isotropic body. In the case of an isotropic body with Young's modulus E and Poisson's ratio ν we have

$$\left.\begin{aligned} a=b=-\frac{\nu}{1-\nu}, \quad c=\frac{2-\nu}{1-\nu}, \quad d=1, \\ a+c=2, \quad s_1=s_2=1. \end{aligned}\right\} \tag{78.26}$$

By introducing a new function

$$\chi=\frac{\varphi}{1-\nu}, \tag{78.27}$$

we obtain, from (78.11), the well-known formulas

$$\left.\begin{aligned} \sigma_r &= \frac{\partial}{\partial z}\left(\nu\nabla^2\chi-\frac{\partial^2\chi}{\partial r^2}\right), \\ \sigma_\theta &= \frac{\partial}{\partial z}\left(\nu\nabla^2\chi-\frac{1}{r}\frac{\partial\chi}{\partial r}\right), \\ \sigma_z &= \frac{\partial}{\partial z}\left[(2-\nu)\nabla^2\chi-\frac{\partial^2\chi}{\partial z^2}\right], \\ \tau_{rz} &= \frac{\partial}{\partial r}\left[(1-\nu)\nabla^2\chi-\frac{\partial^2\chi}{\partial z^2}\right], \end{aligned}\right\} \tag{78.28}$$

where

$$\nabla^2=\frac{\partial^2}{\partial r^2}+\frac{1}{r}\frac{\partial}{\partial r}+\frac{\partial^2}{\partial z^2}. \tag{78.29}$$

The function χ satisfies the equation

$$\nabla^2\nabla^2\chi=0, \tag{78.30}$$

i.e., it is biharmonic (see [29], p. 275).

79. General Expressions for Stresses and Displacements in Terms of Two Functions. The General Case of the Deformation of a Transversely Isotropic Body

In addition to the general representation of the stresses and displacements using one function $\varphi(r, z)$ satisfying a fourth-order equation, another representation may be

indicated, using two functions satisfying second-order equations.

The general formulas of this kind were suggested by H. A. Elliott in [66]; they were used later by various authors in the solution of specific problems (A.A. Babloyan [48], [49] among others).

We introduce into consideration two functions, $\varphi_1(r, z)$ and $\varphi_2(r, z)$, satisfying the equations

$$\nabla_1^2\varphi_1 = 0, \quad \nabla_2^2\varphi_2 = 0, \tag{79.1}$$

where ∇_i^2 are operators (78.16). Assuming

$$\frac{\partial\varphi}{\partial z} = \varphi_1 + \varphi_2, \tag{79.2}$$

and using the equality $\frac{\partial}{\partial z}\nabla_1^2\nabla_2^2\varphi = \frac{\partial}{\partial z}\nabla_2^2\nabla_1^2\varphi$, we see that Eq. (78.17) is satisfied, i.e., the sum $\varphi_1 + \varphi_2$ is its solution.

We state, without derivation, formulas for the displacements and stresses (see [66], [48], [49]):

$$u_r = \frac{\partial}{\partial r}(\varphi_1 + \varphi_2), \quad w = \frac{\partial}{\partial z}(k_1\varphi_1 + k_2\varphi_2); \tag{79.3}$$

$$\left.\begin{aligned}
\sigma_r &= -\frac{A_{11}-A_{12}}{r}\frac{\partial}{\partial r}(\varphi_1+\varphi_2) - \\
&\qquad - A_{44}\frac{\partial^2}{\partial z^2}[(1+k_1)\varphi_1 + (1+k_2)\varphi_2], \\
\sigma_\theta &= \frac{A_{11}-A_{12}}{r}\frac{\partial}{\partial r}(\varphi_1+\varphi_2) + \\
&\quad + \frac{\partial^2}{\partial z^2}[(A_{13}k_1 - A_{12}\lambda_1^2)\varphi_1 + (A_{13}k_2 - A_{12}\lambda_2^2)\varphi_2], \\
\sigma_z &= \frac{\partial^2}{\partial z^2}[(A_{33}k_1 - A_{13}\lambda_1^2)\varphi_1 + (A_{33}k_2 - A_{13}\lambda_2^2)\varphi_2], \\
\tau_{rz} &= A_{44}\frac{\partial^2}{\partial r\,\partial z}[(1+k_1)\varphi_1 + (1+k_2)\varphi_2], \\
\tau_{\theta z} &= \tau_{r\theta} = 0.
\end{aligned}\right\} \tag{79.4}$$

Here λ_1^2, λ_2^2 are the squares of the roots of the equation

$$A_{11}A_{44}\lambda^4 + [A_{13}(A_{13} + 2A_{44}) - A_{11}A_{33}]\lambda^2 + \\ + A_{33}A_{44} = 0. \tag{79.5}$$

which are assumed to be distinct,

$$k_i = \frac{A_{11}\lambda_i^2 - A_{44}}{A_{13} + A_{44}}, \quad (i = 1, 2) \tag{79.6}$$

and A_{ij} are the elastic constants from the generalized Hooke's law equations (78.2) solved for the stress components.*

Note that Eq. (79.5) may be written in a simpler form, namely

$$\lambda^4 - (a + c)\lambda^2 + d = 0, \tag{79.7}$$

where a, c, d are determined by formulas (78.12). It is easy to notice the relation between the roots of Eqs. (78.22), (79.7) and the parameters s_i:

$$\lambda_1 = \frac{i}{\mu_1} = \frac{1}{s_1}, \quad \lambda_2 = \frac{i}{\mu_2} = \frac{1}{s_2}. \tag{79.8}$$

It follows that the roots λ_1, λ_2 can be real or complex, but cannot be pure imaginary, and the squares λ_1^2, λ_2^2 are real or complex numbers. It is quite possible that λ_i^2 are pure imaginary (if the real part of μ_i is numerically equal to the imaginary part).

In [60], which will come under consideration in Sec. 85, W.T. Chen somewhat modifies the general formulas (79.3) and (79.4) by introducing new variables

$$z_1 = \frac{z}{\lambda_1}, \quad z_2 = \frac{z}{\lambda_2},$$

and potential functions $\Phi_1(r, z_1)$ and $\Phi_2(r, z_2)$ instead of $\varphi_1(r, z)$ and $\varphi_2(r, z)$. These general formulas [the transformed formulas (79.3) and (79.4)] are of the form

$$\left.\begin{aligned} u_r &= \frac{\partial}{\partial r}(\Phi_1 + \Phi_2), \\ w &= \frac{k_1}{\lambda_1}\frac{\partial \Phi_1}{\partial z_1} + \frac{k_2}{\lambda_2}\frac{\partial \Phi_2}{\partial z_2}; \end{aligned}\right\} \tag{79.9}$$

* The notation used in the cited papers is somewhat different: the elastic constants and the roots of Eq. (79.5) are denoted by c_{ij} and ν_i, respectively. We have changed the notation in accordance with that adopted in the present book.

$$\left.\begin{aligned}
\sigma_r &= -\frac{A_{11}-A_{12}}{r}\frac{\partial}{\partial r}(\Phi_1+\Phi_2)+\\
&\quad + A_{44}\left(\frac{\partial^2}{\partial r^2}+\frac{1}{r}\frac{\partial}{\partial r}\right)\left(\frac{1+k_1}{\lambda_1^2}\Phi_1+\frac{1+k_2}{\lambda_2^2}\Phi_2\right),\\
\sigma_\theta &= -(A_{11}-A_{12})\frac{\partial^2}{\partial r^2}(\Phi_1+\Phi_2)+\\
&\quad + A_{44}\left(\frac{\partial^2}{\partial r^2}+\frac{1}{r}\frac{\partial}{\partial r}\right)\left(\frac{1+k_1}{\lambda_1^2}\Phi_1+\frac{1+k_2}{\lambda_2^2}\Phi_2\right),\\
\sigma_z &= A_{44}\left[(1+k_1)\frac{\partial^2\Phi_1}{\partial z_1^2}+(1+k_2)\frac{\partial^2\Phi_2}{\partial z_2^2}\right],\\
\tau_{rz} &= A_{44}\left[(1+k_1)\frac{1}{\lambda_1}\frac{\partial^2\Phi_1}{\partial r\,\partial z_1}+(1+k_2)\frac{1}{\lambda_2}\frac{\partial^2\Phi_2}{\partial r\,\partial z_2}\right].
\end{aligned}\right\} \tag{79.10}$$

The functions $\Phi_i(r, z_i)$ are harmonic functions of the variables r and z_i, i.e., they satisfy the equation

$$\frac{\partial^2\Phi_i}{\partial r^2}+\frac{1}{r}\frac{\partial\Phi_i}{\partial r}+\frac{\partial^2\Phi_i}{\partial z_i^2}=0 \quad (i=1,\,2). \tag{79.11}$$

The advantages of the general representation (79.9), (79.10) lie in the fact that we deal with the harmonic functions Φ_1 and Φ_2, which must be determined from the surface conditions. A shortcoming of this representation is that the functions have different arguments: Φ_1 is a function of r and z_1, and Φ_2 is a function of r and z_2.

Consider, now, a transversely isotropic body that is deformed by forces producing a general deformation depending on all three co-ordinates. Hu Hai-chang and W. Nowacki have shown that the displacements and stresses may be expressed in terms of a function satisfying a fourth-order equation and also in terms of functions satisfying a second-order equation.*

Let the body be referred to a Cartesian co-ordinate system, with the axis directed normally to the planes of isotropy. Below are given the formulas for the displacements taken from [69]:

$$\left.\begin{aligned}
&u=-\frac{\partial^2\varphi}{\partial x\,\partial z}-\frac{\partial\psi}{\partial y}, \quad v=-\frac{\partial^2\varphi}{\partial y\,\partial z}+\frac{\partial\psi}{\partial x},\\
&w=\alpha\left(\frac{\partial^2\varphi}{\partial x^2}+\frac{\partial^2\varphi}{\partial y^2}+\gamma\frac{\partial^2\varphi}{\partial z^2}\right).
\end{aligned}\right\} \tag{79.12}$$

* See [69] and [105]; in [69] F and φ are used instead of φ and ψ, respectively.

Here

$$\alpha = \frac{A_{11}}{A_{13}+A_{44}}, \quad \gamma = \frac{A_{44}}{A_{13}+A_{44}}. \tag{79.13}$$

A_{ij} are the elastic constants from Eqs. (4.8) or (78.2).

The functions φ and ψ satisfy the equations

$$\nabla_1^2 \nabla_2^2 \varphi = 0, \tag{79.14}$$

$$\nabla_0^2 \varphi = 0. \tag{79.15}$$

Here

$$\nabla_i^2 = \frac{\partial^2}{\partial x^2} + \frac{\partial^2}{\partial y^2} + \frac{1}{s_i^2}\frac{\partial^2}{\partial z^2} \quad (i = 0, 1, 2), \tag{79.16}$$

s_1, s_2 are the parameters introduced previously, which are determined by formulas (78.15) and (78.12), and

$$s_0^2 = \frac{A_{66}}{A_{44}}. \tag{79.17}$$

The stress components are determined from the generalized Hooke's law equations (4.8) by substituting the expressions for the displacements. They will not be given here.

If we use a cylindrical system r, θ, z, with the z axis directed normally to the planes of isotropy, the expressions for the displacements take the form

$$\left.\begin{aligned} u_r &= -\frac{\partial^2 \varphi}{\partial r\, \partial z} - \frac{1}{r}\frac{\partial \psi}{\partial \theta}, \quad u_\theta = -\frac{1}{r}\frac{\partial^2 \varphi}{\partial \theta\, \partial z} + \frac{\partial \psi}{\partial r}, \\ w &= \alpha\left(\frac{\partial^2 \varphi}{\partial r^2} + \frac{1}{r}\frac{\partial \varphi}{\partial r} + \frac{1}{r^2}\frac{\partial^2 \varphi}{\partial \theta^2} + \gamma\frac{\partial^2 \varphi}{\partial z^2}\right). \end{aligned}\right\} \tag{79.18}$$

Equations (79.14) and (79.15) remain true for the functions φ and ψ, with

$$\nabla_i^2 = \frac{\partial^2}{\partial r^2} + \frac{1}{r}\frac{\partial}{\partial r} + \frac{1}{r^2}\frac{\partial^2}{\partial \theta^2} + \frac{1}{s_i^2}\frac{\partial^2}{\partial z^2}. \tag{79.19}$$

The expressions for the stresses in terms of φ and ψ are obtained from Eqs. (78.2). Here, too, we can introduce, instead of the function φ, two funtions, φ_1 and φ_2, of the variables x, y, z or r, θ, z satisfying the equations (see [66])

$$\nabla_1^2 \varphi_1 = 0, \quad \nabla_2^2 \varphi_2 = 0, \tag{79.20}$$

where the operators ∇_i^2 are of the form of (79.16) and (79.19).

Many problems have been solved using the representations indicated in this and the preceding section. Thus, Hu Haichang has investigated the bending of a cone by a transverse force applied at the vertex ([69]), W. Nowacki has considered the state of stress in a half-space and a thin plate ([105]), A.A. Babloyan has solved a non-trivial problem of the elastic equilibrium of a circular cylinder of finite length ([48], [49]), etc.

80. Stress Distribution in a Cylinder under an Arbitrary Axially Symmetric Load

Consider a cylinder loaded over the lateral surface by arbitrary axially symmetric forces $N(z)$ and $T(z)$. We adopt only one restriction, namely that the forces, as functions of z, satisfy the Dirichlet conditions, and hence can be represented by Fourier series.

In this case the solution of Eq. (78.17) must also be sought in the form of a series of the sines or cosines of the arguments $m\pi z/l$ ($m = 1, 2, 3, \ldots$). We first determine the solution of Eq. (78.17) in the form of a product:

$$\varphi_m = f_m(r) \sin \frac{m\pi z}{l}, \tag{80.1}$$

where m is an integer, or in the corresponding form with the cosine. Substituting (80.1) in (78.17), we obtain a fourth-order equation for f_m:

$$\left[\frac{d^2}{dr^2} + \frac{1}{r}\frac{d}{dr} - \left(\frac{m\pi}{s_1 l}\right)^2\right]\left[f_m'' + \frac{f_m'}{r} - \left(\frac{m\pi}{s_2 l}\right)^2 f_m\right] = 0, \tag{80.2}$$

which reduces to two Bessel equations. The general integral of this equation is expressed in terms of the Bessel and Weber functions of zero order of the arguments $\frac{m\pi i}{s_1 l} r$ and $\frac{m\pi i}{s_2 l} r$ complex in general. If s_1 and s_2 are real numbers, f_m and φ_m are expressed in terms of modified Bessel functions and Macdonald functions. For definiteness, we shall consider only the case of real distinct s_1 and s_2. The final expression

for the function φ_m is

$$\varphi_m = \left[A_m I_0 \left(\frac{m\pi}{s_1 l} r \right) + B_m I_0 \left(\frac{m\pi}{s_2 l} r \right) + \right.$$

$$\left. + C_m K_0 \left(\frac{m\pi}{s_1 l} r \right) + D_m K_0 \left(\frac{m\pi}{s_2 l} r \right) \right] \sin \frac{m\pi z}{l}. \qquad (80.3)$$

The function φ_m is expressed as a product $f_m(r) \cos \frac{m\pi z}{l}$ in a similar way.

We outline the procedure for the solution of the following problem. A solid circular cylinder (having no cavity) is loaded over the lateral surface by normal forces N distributed symmetrically with respect to the middle cross section (Fig. 105). Let the origin of co-ordinates be placed at the centre of the middle section, and let the length be denoted by $2l$. We expand the function $N(z)$ in a Fourier series, which will contain only the cosines and a constant term. The conditions on the lateral surface are written as follows: when $z = R$,

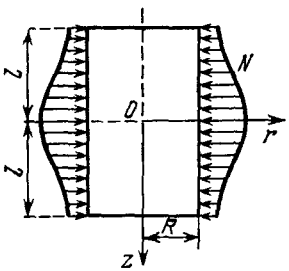

Fig. 105

$$\sigma_r = -N = -a_0 - \sum_{m=1}^{\infty} a_m \cos \frac{m\pi z}{l}, \qquad \tau_{rz} = 0, \qquad (80.4)$$

By requiring that the resultant of the forces at the ends should be zero, we add a further condition: when $z = \pm l$,

$$\int_0^R \sigma_z r dr = 0. \qquad (80.5)$$

The function K_0 has a singularity at $r = 0$; consequently, the coefficients of K_0 in the expression for φ must be set equal to zero.

The final expression for φ is

$$\varphi = B_{30}z^3 + B_{32}zr^2 + \\ + \sum_{m=1}^{\infty} \left[A_m I_0 \left(\frac{m\pi}{\varepsilon_1 l} r \right) + B_m I_0 \left(\frac{m\pi}{\varepsilon_2 l} r \right) \right] \sin \frac{m\pi z}{l}. \qquad (80.6)$$

Next, we determine the stresses by formulas (78.11) and satisfy the boundary conditions (80.4). We obtain two equations for A_m and B_m and one equation for B_{30} and B_{32}. The lacking equation is obtained from the end condition (80.5). The stress τ_{rz} vanishes at the ends, as required. We restrict ourselves to these general remarks.

At present an exact solution is known for a circular cylinder, satisfying both the conditions on the lateral surface and at the ends. It has been found by A. A. Babloyan in [48] (special case) and in [49] (more general case). We shall not elaborate upon these solutions, but only indicate the general procedure for the solution of the problem considered in [49].

It is assumed that a solid cylinder of length $2l$ and radius R is loaded over the lateral surface by given forces represented as Fourier series:

$$N = \gamma_0' + \sum_{m=1}^{\infty} \gamma_m' \cos \frac{m\pi z}{l}, \quad T = \sum_{m=1}^{\infty} \gamma_m \sin \frac{m\pi z}{l}, \qquad (80.7)$$

and at the ends by forces represented as series:

$$N_1 = \delta_0' + \sum_{m=1}^{\infty} \delta_m' J_0 \left(\frac{\mu_m r}{R} \right), \quad T_1 = \sum_{m=1}^{\infty} \delta_m J_1 \left(\frac{\mu_m r}{R} \right). \qquad (80.8)$$

The stresses and displacements satisfy the conditions

$$\sigma_r (R, z) = N, \quad \tau_{rz} (R, z) = T; \qquad (80.9)$$

$$\sigma_z (r, l) = N_1, \quad \tau_{rz} (r, l) = T_1, \qquad (80.10)$$

and further conditions:

$$\left. \begin{aligned} &\tau_{rz} (0, z) = u_r (0, z) = 0, \\ &\tau_{rz} (r, 0) = w (r, 0). \end{aligned} \right\} \qquad (80.11)$$

The functions φ_1, φ_2 are sought in the form*

$$\varphi_i = a_i z + b_i \left(\frac{r^2}{2} - \frac{z^2}{\lambda_i^2}\right) + \sum_{m=1}^{\infty} A_m^i I_0 \left(\frac{m\pi\lambda_i}{l} r\right) \cos\frac{m\pi z}{l} +$$

$$+ \sum_{m=1}^{\infty} \left(B_m^i \cosh\frac{\mu_m z}{\lambda_i R} + C_m^i \sinh\frac{\mu_m z}{\lambda_i R}\right) J_0\left(\frac{\mu_m r}{R}\right)$$

$$(i = 1, 2) \qquad (80.12)$$

(here and in the foregoing μ_m are the roots of the equation $J_1(x) = 0$; $\pm\lambda_1$, $\pm\lambda_2$ are the roots of Eq. (79.5), which are assumed to be distinct). On satisfying some of the conditions, the constants A_m^1, C_m^1, A_m^2, C_m^2 are expressed in terms of new constants, X_m, Y_m, with $B_m^1 = B_m^2 = 0$.

The problem is further reduced to that of determining the unknown constants X_m, Y_m. The resulting infinite system of equations for them is, as shown, regular. The coefficients b_1, b_2 are determined uniquely, and

$$a_2 = -a_1 \frac{k_1}{k_2}, \qquad (80.13)$$

where k_1, k_2 are found by formula (79.6). We leave brief account at this point, and refer those wishing to become acquainted with the subject in greater detail to the papers by A.A. Babloyan already cited.

81. Stress Distribution in a Heavy Block with a Vertical Cavity

Closely related to the problem of the equilibrium of a cylinder is the following problem of some interest in mining.

There is a homogeneous transversely isotropic block bounded by a horizontal plane (half-space); all planes of isotropy are parallel to the boundary plane. A vertical cavity in the form of a circular cylinder of radius R_0 extends

* See formulas and equations (79.3) to (79.7). We have somewhat modified the notation used by A. A. Babloyan in accordance with that adopted in this book. The origin of co-ordinates is placed at the centre of the middle section.

from this plane inwards. It is required to determine the stresses near the cavity due to gravity.

In the theory, the block is first assumed to be infinite, as is the length of the cavity. Let the origin of co-ordinates be placed on the boundary plane at the centre of the section of the cavity, with the z axis directed vertically downward (Fig. 106). The problem is solved in an elementary way (see [79] and [26]).

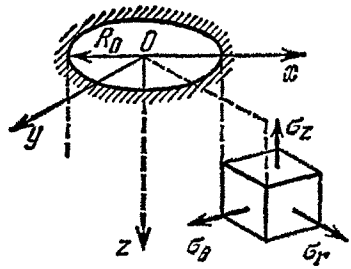

Fig. 106

We first determine the stresses and displacements due to gravity in a solid block (without a cavity); they will be marked by zeros. Assuming

$$u_r^0 = u_\theta^0 = 0, \qquad w^0 = w^0(z),$$

from the generalized Hooke's law equations (78.1) we find

$$\sigma_r^0 = \sigma_\theta^0 = -\frac{a_{13}}{a_{11}+a_{12}}\sigma_z^0, \quad \tau_{rz}^0 = 0. \tag{81.1}$$

By integrating the second equilibrium equation of (78.8), where $R = 0$, $Z = \gamma$ (γ is the specific weight), and satisfying the condition on the free surface $z = 0$, where we must have $\sigma_z^0 = 0$, we obtain

$$\left.\begin{aligned} &\sigma_r^0 = \sigma_\theta^0 = \frac{a_{13}}{a_{11}+a_{12}}\gamma z, \quad \sigma_z^0 = -\gamma z, \quad \tau_{rz}^0 = 0, \\ &u_r^0 = u_\theta^0 = 0, \quad w^0 = \frac{2a_{13}^2 - (a_{11}+a_{12})\,a_{33}}{2\,(a_{11}+a_{12})}\gamma z^2 + c \end{aligned}\right\} \tag{81.2}$$

(c is an arbitrary constant).

The stress distribution in a half-space with a cavity is obtained by superimposing stresses (81.2) and the stresses determined by formulas (78.11) and corresponding to the stress function

$$\varphi = (C_{20}z^2 + C_{22}r^2)\ln r; \tag{81.3}$$

the latter tend to zero as r increases indefinitely.

If no external forces are applied on the surface of the cavity, the following conditions must be fulfilled there: when $r = R_0$,

$$\sigma_r = \tau_{rz} = 0. \tag{81.4}$$

In addition, on the plane $z = 0$

$$\sigma_z = \tau_{rz} = 0. \tag{81.5}$$

By determining the constants C_{20} and C_{22} from these conditions, we obtain

$$\left.\begin{aligned} \sigma_r &= \frac{a_{13}}{a_{11}+a_{12}}\gamma z\left(1-\frac{R_0^2}{r^2}\right) \\ \sigma_\theta &= \frac{a_{13}}{a_{11}+a_{12}}\gamma z\left(1+\frac{R_0^2}{r^2}\right), \\ \sigma_z &= -\gamma z,\ \tau_{rz}=0, \end{aligned}\right\} \tag{81.6}$$

$$\left.\begin{aligned} u_r &= \frac{(a_{11}-a_{12})\,a_{13}}{a_{11}+a_{12}}\gamma z\,\frac{R_0^2}{r}, \\ w &= \frac{2a_{13}^2-(a_{11}+a_{12})\,a_{33}}{2\,(a_{11}+a_{12})}\gamma z^2 - \\ &\qquad -\frac{a_{13}\,(a_{11}-a_{12})}{a_{11}+a_{12}}\gamma R_0^2\ln r + c. \end{aligned}\right\} \tag{81.7}$$

The stress σ_θ at radial sections at the surface of the cavity is determined by the formula

$$\sigma_\theta = \frac{2a_{13}}{a_{11}+a_{12}}\gamma z = -\frac{2E}{E'}\,\frac{\nu'}{1-\nu}\gamma z. \tag{81.8}$$

This stress is twice that in a solid block at the same distance z from the boundary plane. The expressions for the displacements show that the edge of the hole in the deformed block considered from the viewpoint of the classical theory of elasticity must rise a little.

If the surface of the cavity is acted on by a pressure qz varying directly as the distance z, then to stresses (81.6) are added the following:

$$\sigma_r = -\frac{qR_0^2}{r^2}z, \quad \sigma_\theta = \frac{qR_0^2}{r^2}z, \quad \sigma_z = \tau_{rz} = 0. \tag{81.9}$$

This is the case when the cavity is filled to the top with liquid.

A much more complicated problem is that of stress distribution in an elastic heavy block with a vertical cavity of finite length, i.e., having a flat bottom. This problem has been solved by V.Z. Vasil'ev for the case of

an isotropic block (see [127]). The problem has been reduced to a system of three integral equations, which has been solved approximately. The formulas obtained allow the stresses to be calculated to a zero and a first approximation.

82. Stress Distribution in an Elastic Half-space under an Axially Symmetric Normal Load

The problem is formulated as follows. An elastic homogeneous transversely isotropic half-space is bounded by an infinite plane and has planes of isotropy parallel to the boundary plane. Normal forces distributed over the area of a circle on this boundary plane have rotational symmetry about a normal drawn through the centre of the circle, which is taken as the origin O of a cylindrical co-ordinate system (the z axis is directed normally to the boundary inwards).

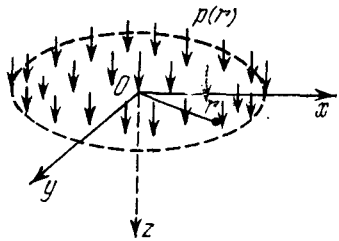

Fig. 107

Denoting the intensity of loading by $p(r)$ (Fig. 107), we assume that this function satisfies the conditions: (1) it is finite for all r, (2) in any finite interval $r > 0$ the number of points of discontinuity and extreme points is finite, and (3) the integral $\int_0^\infty p\sqrt{r}\,dr$ converges absolutely, i.e., the resultant force vector is finite or zero. These rather general restrictions allow the load, as a function of r, to be represented by the Fourier-Bessel integral, i.e., in the form

$$p(r) = \int_0^\infty \psi(t)\, tJ_0(tr)\, dt, \tag{82.1}$$

where

$$\psi(t) = \int_0^\infty p(\xi)\, \xi J_0(\xi t)\, d\xi, \tag{82.2}$$

J_0 is the zero-order Bessel function of a real argument.

The surface conditions are written as follows: when $z = 0$,

$$\sigma_z = -p(r) = -\int_0^\infty \psi(t)\, tJ_0(tr)\, dt, \quad \tau_{rz} = 0. \tag{82.3}$$

It is natural to assume that the stresses at infinity are all zero, i.e., as $z \to \infty$,

$$\sigma_r = \sigma_\theta = \sigma_z = \tau_{rz} = 0. \tag{82.4}$$

The expression for φ is first sought in the form of a product:

$$\varphi = Z(tz)\, J_0(tr). \tag{82.5}$$

Substituting in Eq. (78.13), we obtain an equation for Z:

$$dZ^{\mathrm{IV}} - (a + c)\, Z'' + Z = 0 \tag{82.6}$$

(the derivatives are taken with respect to the argument tz) to which corresponds the characteristic equation

$$ds^4 - (a + c)\, s^2 + 1 = 0. \tag{82.7}$$

This equation has already been encountered (in Sec. 78); its roots, $\pm s_1$, $\pm s_2$, are always real or complex numbers, but cannot be pure imaginary. When s_1 and s_2 are distinct, expression (82.5) is of the form

$$\varphi = (Ae^{s_1 tz} + Be^{s_2 tz} + Ce^{-s_1 tz} + De^{-s_2 tz})\, J_0(tr), \tag{82.8}$$

and when $s_1 = s_2 = s$,

$$\varphi = [(A + Btz)\, e^{stz} + (C + Dtz)\, e^{-stz}]\, J_0(tr). \tag{82.9}$$

We require that the stresses found from the function φ should satisfy the conditions at infinity (82.4); for this it is obviously necessary to set $A = B = 0$.

The function φ obtained by integrating expressions (82.8) or (82.9) with respect to t is also (at least formally) a solution of Eq. (78.17). Assuming that $s_1 \neq s_2$, we take

for the function φ the expression

$$\varphi = \int_0^\infty (Ce^{-s_1 tz} + De^{-s_2 tz}) J_0(tr)\, dt, \tag{82.10}$$

where C and D depend on the parameter t. The corresponding stresses found by formulas (78.11) are also represented as integrals; in particular,

$$\left.\begin{aligned} \sigma_z &= -\int_0^\infty [Cs_1(ds_1^2 - c)\, e^{-s_1 tz} + Ds_2(ds_2^2 - c)\, e^{-s_2 tz}] \times \\ &\qquad\qquad \times t^3 J_0(tr)\, dt, \\ \tau_{rz} &= -\int_0^\infty [C(as_1^2 - 1)\, e^{-s_1 tz} + D(as_2^2 - 1)\, e^{-s_2 tz}] \times \\ &\qquad\qquad \times t^3 J_1(dr)\, dt \end{aligned}\right\} \tag{82.11}$$

(J_1 is the Bessel function of the first order). By satisfying conditions (82.3), we obtain the equations

$$\left.\begin{aligned} Cs_1(ds_1^2 - c) + Ds_2(ds_2^2 - c) &= \frac{\psi(t)}{t^2}, \\ C(as_1^2 - 1) + D(as_2^2 - 1) &= 0. \end{aligned}\right\} \tag{82.12}$$

From this

$$C = -\frac{\psi(t)}{t^2}\, \frac{(1 - as_2^2)\sqrt{d}}{(s_1 - s_2)(ac - d)},$$

$$D = \frac{\psi(t)}{t^2}\, \frac{(1 - as_1^2)\sqrt{d}}{(s_1 - s_2)(ac - d)}. \tag{82.13}$$

For shortness, we introduce the notation:

$$\left.\begin{aligned} &p_1 = 1 - as_1^2, \quad q_1 = (b - as_2^2)(1 - as_1^2), \\ &p_2 = 1 - as_2^2, \quad q_2 = (b - as_1^2)(1 - as_2^2), \\ &\lambda = \frac{(b-1)\sqrt{d}}{ac - d} = \frac{1 - \nu}{\sqrt{d}}, \\ &\mu = \frac{(b-1)(a + \sqrt{d})}{ac - d} = (1 - \nu)\frac{a + \sqrt{d}}{d}, \end{aligned}\right\} \tag{82.14}$$

the final formulas for the stresses then become (see [79], pp. 49-50 and [26])

$$\left.\begin{aligned}
\sigma_r &= -\frac{1}{(s_1-s_2)\sqrt{d}}\int_0^\infty \psi(t)\,(s_1e^{-s_1tz}-s_2e^{-s_2tz})\times \\
&\qquad\qquad \times tJ_0(tr)\,dt+ \\
&+\frac{\lambda}{s_1-s_2}\frac{1}{r}\int_0^\infty \psi(t)(s_1p_2e^{-s_1tz}-s_2p_1e^{-s_2tz})\,J_1(tr)\,dt, \\
\sigma_\theta &= \frac{\sqrt{d}}{(s_1-s_2)(ac-d)}\int_0^\infty \psi(t)\,(s_1q_2e^{-s_1tz}-s_2q_1e^{-s_2tz})\times \\
&\qquad\qquad \times tJ_0(tr)\,dt- \\
&-\frac{\lambda}{s_1-s_2}\frac{1}{r}\int_0^\infty \psi(t)\,(s_1p_2e^{-s_1tz}-s_2p_1e^{-s_2tz})\,J_1(tr)\,dt, \\
\sigma_z &= \frac{1}{s_1-s_2}\int_0^\infty \psi(t)\,(s_2e^{-s_1tz}-s_1e^{-s_2tz})\,tJ_0(tr)\,dt, \\
\tau_{rz} &= \frac{1}{(s_1-s_2)\sqrt{d}}\int_0^\infty \psi(t)\,(e^{-s_1tz}-e^{-s_2tz})\,tJ_1(tr)\,dt.
\end{aligned}\right\} \qquad (82.15)$$

To determine the stresses, it is first necessary to find the function $\psi(t)$ corresponding to a given load by formula (82.2). For simple distributions of the forces $p(r)$, the evaluation of the integrals entering into (82.15) presents no great difficulty.

We shall not consider the case of equal roots since the formulas for a given load are obtained by passing to the limit as $s_1 \to s_2$.

By this method we can obtain solutions of problems for the cases when both normal and tangential symmetrically distributed forces $\tau_{rz}(r, 0)$ or axially symmetric displacements $u_r(r, 0)$, $w(r, 0)$ are prescribed on the boundary, and also solutions of mixed problems (one displacement component and one stress component are prescribed).

83. Stress Distribution in a Half-space under a Concentrated Force and an Arbitrary Normal Load

Let a concentrated force P be applied to a half-space at a point O on the boundary plane (Fig. 108). To obtain the stresses produced by this force, we first consider a normal load of intensity $p = P/\pi\varepsilon^2$ distributed uniformly over the area of a circle of infinitesimal radius ε. For this load

$$\psi(t) = p\int_0^\infty J_0(\xi t)\,\xi\,d\xi = \frac{P}{\pi\varepsilon t}J_1(t\varepsilon). \quad (83.1)$$

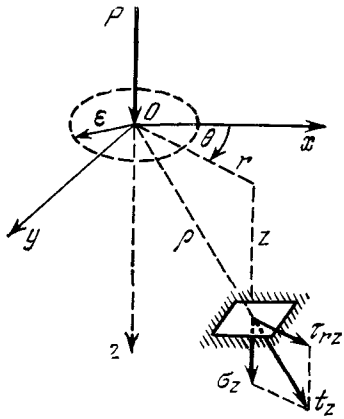

Fig. 108

We substitute this expression in formulas (82.15) and then allow the radius ε to tend to zero. As $\varepsilon \to 0$, the expressions appearing under the integral signs tend to definite limits since

$$\lim_{\varepsilon\to 0}\frac{J_1(t\varepsilon)}{t\varepsilon} = \frac{1}{2}. \quad (83.2)$$

All integrals entering into the stress formulas reduce to four different integrals whose expressions are known; these are as follows (see [12], pp. 721 and 726):

$$\left.\begin{aligned}
&\int_0^\infty e^{-stz}J_0(tr)\,dt = \frac{1}{\sqrt{r^2+s^2z^2}},\\
&\int_0^\infty e^{-stz}tJ_0(tr)\,dt = \frac{sz}{(r^2+s^2z^2)^{3/2}},\\
&\int_0^\infty e^{-stz}J_1(tr)\,dt = \frac{1}{r}\left(1-\frac{sz}{\sqrt{r^2+s^2z^2}}\right),\\
&\int_0^\infty e^{-stz}tJ_1(tr)\,dt = \frac{r}{(r^2+s^2z^2)^{3/2}}
\end{aligned}\right\} \quad (83.3)$$

(s is a real or complex number with a positive real part, but not an imaginary number).

We obtain the following formulas giving the stress distribution in a transversely isotropic half-space due to a concentrated force:*

$$\left.\begin{aligned}
\sigma_r &= -\frac{P}{2\pi}\left\{\frac{z}{(s_1-s_2)\sqrt{d}}\times\right.\\
&\quad\times\left[\frac{s_1^2}{(r^2+s_1^2z^2)^{3/2}}-\frac{s_2^2}{(r^2+s_2^2z^2)^{3/2}}\right]+\\
&\quad\left.+\frac{\lambda}{s_1-s_2}\frac{z}{r^2}\left[\frac{s_1^2p_2}{\sqrt{r^2+s_1^2z^2}}-\frac{s_2^2p_1}{\sqrt{r^2+s_2^2z^2}}\right]-\frac{\mu}{r^2}\right\},\\
\sigma_\theta &= -\frac{P}{2\pi}\left\{\frac{\sqrt{d}}{ac-d}\frac{z}{s_1-s_2}\left[-\frac{s_1^2q_2}{(r^2+s_1^2z^2)^{3/2}}+\right.\right.\\
&\quad\left.+\frac{s_2^2q_1}{(r^2+s_2^2z^2)^{3/2}}\right]-\frac{\lambda}{s_1-s_2}\frac{z}{r^2}\times\\
&\quad\times\left[\frac{s_1^2p_2}{\sqrt{r^2+s_1^2z^2}}-\frac{s_2^2p_1}{\sqrt{r^2+s_2^2z^2}}\right]+\left.\frac{\mu}{r^2}\right\},\\
\sigma_z &= \frac{P}{2\pi\sqrt{d}}\frac{z}{s_1-s_2}\left[\frac{1}{(r^2+s_1^2z^2)^{3/2}}-\frac{1}{(r^2+s_2^2z^2)^{3/2}}\right],\\
\tau_{rz} &= \frac{P}{2\pi\sqrt{d}}\frac{r}{s_1-s_2}\left[\frac{1}{(r^2+s_1^2z^2)^{3/2}}-\frac{1}{(r^2+s_2^2z^2)^{3/2}}\right].
\end{aligned}\right\}\qquad(83.4)$$

The expressions for σ_z and τ_{rz} may be written in an alternate form:

$$\left.\begin{aligned}
\sigma_z &= -\frac{P(s_1+s_2)}{2\pi d}z^3\times\\
&\times\frac{3d^2r^4+3(a+c)dz^2r^2+[(a+c)^2-d]z^4}{[dr^4+(a+c)z^2r^2+z^4]^{3/2}[(r^2+s_1^2z^2)^{3/2}+(r^2+s_2^2z^2)^{3/2}]},\\
\tau_{rz} &= \frac{r}{z}\sigma_z.
\end{aligned}\right\}\qquad(83.5)$$

The characteristic features of the state of stress under consideration are as follows. We first observe that all stresses vary inversely as the square of the distance ρ from the point of application of the force, i.e., they decrease

* See the author's paper [79] and book [26]. The solution of the problem (for the special case of a transversely isotropic half-space whose Poisson's ratios are all zero) was obtained earlier by K. Wolf in [129].

fairly rapidly. On planes normal to the force there acts a stress t_z with components σ_z and τ_{rz}. The magnitude of the total stress on these planes is

$$t_z = \sqrt{\sigma_z^2 + \tau_{rz}^2} = |\sigma_z| \sqrt{1 + \left(\frac{r}{z}\right)^2}, \tag{83.6}$$

and its direction coincides with that of a radius vector drawn from the point of application of the force to a given point, or it is opposite to the direction of this radius vector (Fig. 108). Points where the stress has a given constant value $t_z = t_0$ are situated on a surface of revolution passing through the origin; the equation of this surface is

$$z^2 \sqrt{r^2 + z^2} \times$$
$$\times \frac{3d^2r^4 + 3(a+c)\,dz^2r^2 + [(a+c)^2 - d]\,z^4}{[dr^4 + (a+c)\,z^2r^2 + z^4]^{3/2}\,[(r^2 + s_1^2z^2)^{3/2} + (r^2 + s_2^2z^2)^{3/2}]} =$$
$$= \frac{2\pi\,dt_0}{P\,(s_1 + s_2)}. \tag{83.7}$$

The stress distribution in an isotropic half-space is found by a limiting process. Putting $s_1 = s_2 = 1$, $\nu' = \nu$ in (83.4), and evaluating the indeterminacies, we obtain*

$$\left.\begin{aligned}
\sigma_r &= \frac{P}{2\pi}\left[-\frac{3zr^2}{\rho^5} + \frac{1-2\nu}{r^2}\left(1 - \frac{z}{\rho}\right)\right],\\
\sigma_\theta &= \frac{P}{2\pi}(1-2\nu)\left[\frac{z}{\rho^3} - \frac{1}{r^2}\left(1 - \frac{z}{\rho}\right)\right],\\
\sigma_z &= -\frac{3P}{2\pi}\frac{z^3}{\rho^5}, \quad \tau_{rz} = -\frac{3P}{2\pi}\frac{z^2r}{\rho^5}.
\end{aligned}\right\} \tag{83.8}$$

Here $\rho = \sqrt{r^2 + z^2}$ is the distance from the point of application of the force to a given point. The surfaces of constant stress $t_z = t_0$ become spherical surfaces, passing through the point of application of the force and centred on the line of action of the force.

It is easy to pass from a concentrated force to a normal load distributed arbitrarily over the boundary plane. It is more convenient in this case to carry out the investigation by using a Cartesian co-ordinate system in which the xy plane coincides with the boundary plane of a half-space.

We must first find the stresses due to a force P applied, not at the origin, but at an arbitrary point O' with co-

* See, for example, [37], p. 401.

ordinates ξ, η (Fig. 109). Knowing the stresses σ_r, σ_θ, σ_z, τ_{rz} for a cylindrical co-ordinate system with the z' axis directed along the line of action of the force, we find the stress components in a Cartesian system x, y, z:

$$\left.\begin{aligned}
\sigma_x &= \frac{1}{2}(\sigma_r+\sigma_\theta)+\frac{1}{2}(\sigma_r-\sigma_\theta)\frac{(x-\xi)^2-(y-\eta)^2}{(x-\xi)^2+(y-\eta)^2},\\
\sigma_y &= \frac{1}{2}(\sigma_r+\sigma_\theta)-\frac{1}{2}(\sigma_r-\sigma_\theta)\frac{(x-\xi)^2-(y-\eta)^2}{(x-\xi)^2+(y-\eta)^2},\\
\sigma_z &= \sigma_z,\\
\tau_{xy} &= (\sigma_r-\sigma_\theta)\frac{(x-\xi)(y-\eta)}{(x-\xi)^2+(y-\eta)^2},\\
\tau_{xz} &= \tau_{rz}\frac{x-\xi}{\sqrt{(x-\xi)^2+(y-\eta)^2}},\\
\tau_{yz} &= \tau_{rz}\frac{y-\eta}{\sqrt{(x-\xi)^2+(y-\eta)^2}}.
\end{aligned}\right\} \qquad (83.9)$$

Here σ_r, σ_θ, σ_z, τ_{rz} are determined by formulas (83.4) in which r must be replaced by $\sqrt{(x-\xi)^2+(y-\eta)^2}$.

Let a normal load be distributed over a portion S of the boundary plane, and let it be a function of x and y, $p(x, y)$ (Fig. 110). An element $d\xi\, d\eta$ of the loaded portion is acted on by a load $p\, d\xi\, d\eta$, which is considered as a concentrated force. The stresses $\sigma_x, \sigma_y, \ldots, \tau_{yz}$ are obtained by summing the stresses produced by infinitesimal

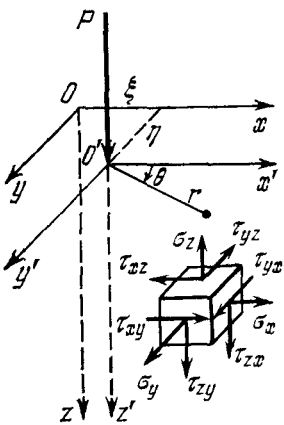

Fig. 109

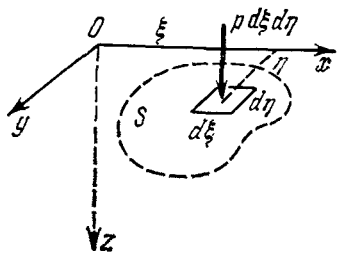

Fig. 110

forces, i.e., by integrating with respect to ξ and η within the region S. We shall not give all the formulas, but only write the expression for σ_z:

$$\sigma_z = \frac{z}{2\pi\sqrt{d}\,(s_1 - s_2)} \iint\limits_S \frac{1}{[(x-\xi)^2+(y-\eta)^2+s_1^2z^2]^{3/2}} - \\ - \frac{1}{[(x-\xi)^2+(y-\eta)^2+s_2^2z^2]^{3/2}}\Bigg] d\xi\, d\eta. \qquad (83.10)$$

84. Extension of an Elastic Cone

The theory of the axially symmetric deformation of a transversely isotropic body enables one to determine the stresses in a conical bar extended by an axial force P (Fig. 111).

It is assumed that the planes of isotropy in the cone under investigation (in general, truncated) are normal to

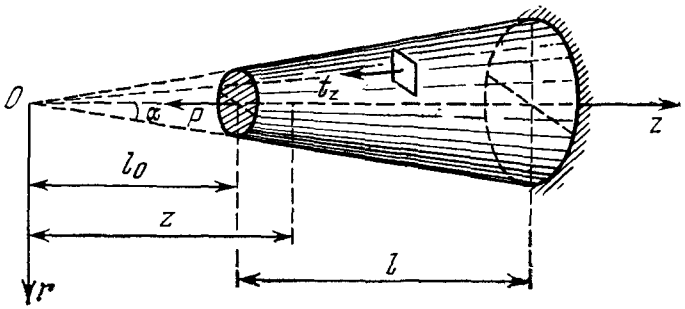

Fig. 111

the geometrical axis. In other words, we consider the elastic equilibrium of a body bounded by the surface of a circular cone and two end planes normal to the geometrical axis of the cone. One end (say the wide end) is assumed to be fixed in a certain way, and the other to be loaded by forces reducing to a force P. Let the vertex of the conical surface be taken as the origin of a cylindrical co-ordinate system, with the z axis directed along the geometrical axis. The vertex angle is denoted by 2α, the length of the bar by l, and the

distances from the vertex to the narrow and wide ends by l_0 and $l_0 + l$, respectively.

The boundary conditions on the lateral surface are written as follows: when $r = z \tan \alpha$,

$$\left.\begin{aligned} \sigma_r \cos \alpha - \tau_{rz} \sin \alpha = 0, \\ \tau_{rz} \cos \alpha - \sigma_z \sin \alpha = 0. \end{aligned}\right\} \tag{84.1}$$

By cutting the body by a plane normal to the z axis, we add to conditions (84.1) the equilibrium condition

$$\int_0^{z \tan \alpha} \sigma_z r \, dr = \frac{P}{2\pi}; \tag{84.2}$$

it must obviously be fulfilled at any distance z from the vertex, and in particular at the ends $z = l_0$ and $z = l_0 + l$. Moreover, the stresses must be finite at any point except the vertex (if the equilibrium of a complete cone is under consideration), and must tend to zero with increasing distance from the vertex.

Let the parameters s_1 and s_2 be distinct. The function φ can then be represented as the sum

$$\begin{aligned} \varphi = A_1 [s_1 z \ln (s_1 z + \sqrt{r^2 + s_1^2 z^2}) - s_1 z \ln r - \sqrt{r^2 + s_1^2 z^2}] + \\ + A_2 [s_2 z \ln (s_2 z + \sqrt{r^2 + s_2^2 z^2}) - s_2 z \ln r - \sqrt{r^2 + s_2^2 z^2}] + \\ + Bz \ln r. \end{aligned} \tag{84.3}$$

With this choice of φ, we can satisfy all conditions, both the exact ones on the lateral surface (84.1) and the equilibrium condition (84.2). The corresponding stresses are determined by formulas (78.11) and (78.12); they will depend on three constants, A_1, A_2, B.

For the stresses to be finite (except at the vertex if the body has the shape of a complete cone), we must set

$$B = A_1 s_1 + A_2 s_2. \tag{84.4}$$

The expressions for the stresses determined from the function φ by formulas (78.11) are then written as

$$\left.\begin{aligned}
\sigma_r &= A_1\Big[-p_1 s_1^2 \frac{z}{(r^2+s_1^2z^2)^{3/2}} + \\
&\quad + s_1 \frac{b-1}{r^2}\left(\frac{s_1 z}{\sqrt{r^2+s_1^2z^2}}-1\right)\Big] + \\
&\quad + A_2\Big[-p_2 s_2^2 \frac{z}{(r^2+s_2^2z^2)^{3/2}} + \\
&\quad + s_2 \frac{b-1}{r^2}\left(\frac{s_2 z}{\sqrt{r^2+s_2^2z^2}}-1\right)\Big], \\
\sigma_\theta &= -A_1\Big[r_1 s_1^2 \frac{z}{(r^2+s_1^2z^2)^{3/2}} + \\
&\quad + s_1 \frac{b-1}{r^2}\left(\frac{s_1 z}{\sqrt{r^2+s_1^2z^2}}-1\right)\Big] - \\
&\quad - A_2\Big[r_2 s_2^2 \frac{z}{(r^2+s_2^2z^2)^{3/2}} + \\
&\quad + s_2 \frac{b-1}{r^2}\left(\frac{s_2 z}{\sqrt{r^2+s_2^2z^2}}-1\right)\Big], \\
\sigma_z &= A_1 p_1 \frac{z}{(r^2+s_1^2z^2)^{3/2}} + A_2 p_2 \frac{z}{(r^2+s_2^2z^2)^{3/2}}, \\
\tau_{rz} &= \frac{r}{z}\sigma_z.
\end{aligned}\right\} \tag{84.5}$$

Here we have used the notation:

$$\left.\begin{aligned}
p_1 &= 1-as_1^2, \quad r_1 = b-as_1^2, \\
p_2 &= 1-as_2^2, \quad r_2 = b-as_2^2.
\end{aligned}\right\} \tag{84.6}$$

Finally, by satisfying conditions (84.1) and (84.2), we find expressions for the constants A_1 and A_2:

$$\left.\begin{aligned}
A_1 &= \frac{P\sqrt{d}}{2\pi}\sqrt{1+s_1^2\cot^2\alpha}\,(\sqrt{1+s_1^2\cot^2\alpha}+ \\
&\quad + s_1\cot\alpha)\frac{p_2\sqrt{1+s_2^2\cot^2\alpha}+r_2 s_2\cot\alpha}{(s_1-s_2)D}, \\
A_2 &= -\frac{P\sqrt{d}}{2\pi}\sqrt{1+s_2^2\cot^2\alpha}\,(\sqrt{1+s_2^2\cot^2\alpha}+ \\
&\quad + s_2\cot\alpha)\frac{p_1\sqrt{1+s_1^2\cot^2\alpha}+r_1 s_1\cot\alpha}{(s_1-s_2)D},
\end{aligned}\right\} \tag{84.7}$$

where

$$D = (s_1 + s_2)(ac - bd)\cot\alpha + \\ + (ac - d)\frac{s_1\sqrt{1 + s_1^2\cot^2\alpha} - s_2\sqrt{1 + s_2^2\cot^2\alpha}}{s_1 - s_2} \qquad (84.8)$$

Formulas (84.5) together with (84.7), (84.8) completely determine the stresses in an elastic truncated cone for any angle $2\alpha \leqslant \pi$; we shall not transform them further, but take them as final. The length l and the distance l_0 do not enter into these formulas, and hence the stress distribution (84.5) to (84.8) is obtained for all values of l and l_0.

The stress distribution in a cone has the same features as that in a half-space under a normal force. The stresses vary inversely as the square of the distance from the vertex. The total stress t_z on planes normal to the axis is directed along the radius vectors (or in the opposite sense).

By a limiting process when $s_1 = s_2 = 1$, $\nu' = \nu$ we arrive at the well-known formulas for an isotropic cone extended by an axial force P.*

85. Stress Distribution around an Ellipsoidal and a Spherical Inclusion or Cavity under Uniaxial and Uniform Tension

As is known (Chap. 4), the problem of stress distribution in an anisotropic body near a cylindrical cutout of elliptical or circular section is solved by a comparatively simple method using conformal mapping and series. Solutions have been obtained for a body under generalized plane strain conditions and the plane problem for general loading, with solutions of special problems carried to the final stage. A rigorous solution has been found for a cutout with a section in the form of an ellipse or a circle, and an approximate solution for cutouts of other shapes if the section of a cutout may be considered as differing very little from an elliptical or a circular one, or in cases where the anisotropy may be regarded as low (see [27], Chaps. 7, 8).

Of great interest are also the problems of stress distribution near inclusions in the form of an ellipsoid of revolution

* See, for example, [29], pp. 202-203.

or a sphere in a body under conditions of axially symmetric strain, but these problems are much more complicated than those mentioned above. In [60] W.T. Chen gives a fairly complete solution of one special problem of this kind and its analysis; below is a brief account of this solution.*

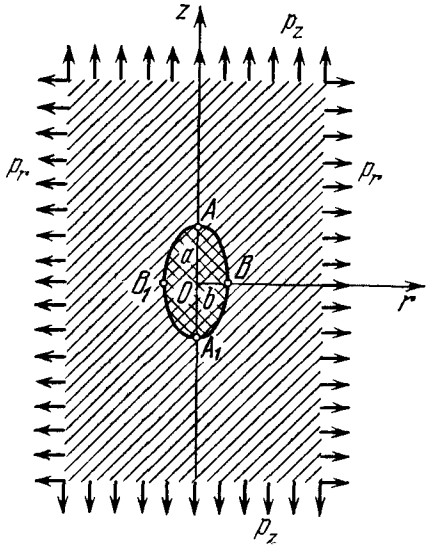

Fig. 112

Suppose that a body in the form of a circular cylinder has, on its axis, an inclusion of different material or a cavity in the form of an ellipsoid of revolution or a sphere. One of the axes of the ellipsoid, the axis of revolution, is directed along the geometrical axis of the cylinder, the centre of the ellipsoid or sphere is taken as the origin O of a cylindrical co-ordinate system, and the z axis is directed along the axis of the cylinder. The body and the elastic inclusion are transversely isotropic and have planes of isotropy normal to the axis of the cylinder. The load is prescribed as normal forces p_r (per unit area) distributed uniformly over the

* We have changed some of the symbols used by W.T. Chen in accordance with the notation adopted in this book. The solution for an isotropic medium is available in [30], Chap. V, Sec. 5.

cylindrical surfaces and normal forces p_z (also per unit area) distributed uniformly over the ends (Fig. 112).

The equation of the surface of the inclusion is of the form

$$\frac{z^2}{a^2}+\frac{r^2}{b^2}=1. \tag{85.1}$$

The dimensions of the inclusion, a and b, are assumed to be small compared with the radius and length of the cylinder; this provides the justification for treating the cylinder as an infinite space with an ellipsoidal cavity filled with different material or an empty one. The centre of the cavity is taken as the origin of co-ordinates; the state of stress at infinity is given as

$$\sigma_r^0=\sigma_\theta^0=p_r, \quad \sigma_z^0=p_z, \quad \tau_{\theta z}^0=\tau_{rz}^0=\tau_{r\theta}^0=0. \tag{85.2}$$

The solution is constructed using the theory of the axially symmetric deformation of a transversely isotropic body. All quantities (stresses, displacements, elastic constants) for the cylinder (elastic space) are denoted as usual, and those for the elastic inclusion are primed. The displacements and stresses are expressed in terms of two potential functions, $\Phi_1(r, z_1)$ and $\Phi_2(r, z_2)$ [see formulas (79.9) and (79.10)], which are to be determined taking into account that they are harmonic functions of the variables r and z_i, i.e., they satisfy the equations

$$\frac{\partial^2\Phi_i}{\partial r^2}+\frac{1}{r}\frac{\partial\Phi_i}{\partial r}+\frac{\partial^2\Phi_i}{\partial z_i^2}=0, \tag{85.3}$$

and that the stresses and displacements satisfy the conditions on the surfaces of contact between the inclusion and the space (*matrix*, in Chen's terminology) and also the conditions at infinity. It is assumed that no slipping is possible for the inclusion material over the surface of the cavity in the space.

The conditions on the contact surfaces are written as

$$R_n'=R_n, \quad Z_n'=Z_n \tag{85.4}$$

(the forces on the surfaces of the inclusion and space must be equal) and

$$u_r'=u_r, \quad w'=w \tag{85.5}$$

(the displacements of points of the surfaces of the inclusion and cavity must be the same). Conditions (85.4) may be written in a different way using the expressions for the projections of the forces [see (78.24)]:

$$\left.\begin{aligned}&(\sigma_r'-\sigma_r)\cos(n,\ r)+(\tau_{rz}'-\tau_{rz})\cos(n,\ z)=0,\\&(\tau_{rz}'-\tau_{rz})\cos(n,\ r)+(\sigma_z'-\sigma_z)\cos(n,\ z)=0.\end{aligned}\right\}\qquad(85.6)$$

The conditions at an infinitely great distance from the centre of the inclusion are written as follows:

$$\sigma_r=p_r,\quad \sigma_\theta=p_r,\quad \sigma_z=p_z,\quad \tau_{rz}=0.\qquad(85.7)$$

It is very important to know the nature of the stress distribution inside the elastic inclusion. Referring to [67], W.T. Chen assumes that the stresses there are constant, and hence the displacements are linear functions of r and z, i.e.,

$$\left.\begin{aligned}&u_r'=B_1r,\quad w'=B_2z,\\&\sigma_r'=\sigma_\theta'=(A_{11}'+A_{12}')B_1+A_{13}'B_2,\\&\sigma_z'=2A_{13}'B_1+A_{33}'B_2.\end{aligned}\right\}\qquad(85.8)$$

The stresses in the space (matrix) are made up of two parts: (1) the stresses in a solid space (with no inclusion) deformed by the given forces, and (2) the added stresses tending to zero with increasing distance from the centre of the inclusion; the latter are denoted by the superscript A. Thus,

$$\left.\begin{aligned}&\sigma_r=p_r+\sigma_r^A,\\&\sigma_\theta=p_r+\sigma_\theta^A,\quad u_r=v_rr+u_r^A,\\&\sigma_z=p_z+\sigma_z^A,\quad w=v_zz+w^A,\\&\tau_{rz}=\tau_{rz}^A.\end{aligned}\right\}\qquad(85.9)$$

Here

$$\left.\begin{aligned}&v_r=\frac{A_{33}p_r-A_{13}p_z}{m},\quad v_z=\frac{(A_{11}+A_{12})\,p_z-2A_{13}p_r}{m},\\&m=A_{33}(A_{11}-A_{12})-2A_{13}^2.\end{aligned}\right\}\qquad(85.10)$$

We further introduce a function $q\,(r,\,z)$ related to r and z by the equality

$$\frac{z^2}{q^2}+\frac{r^2}{q^2-1}=c^2\qquad(c^2=a^2-b^2),\qquad(85.11)$$

and functions q_i determined from the equation

$$\frac{z_i^2}{q_i^2}+\frac{r^2}{q_i^2-1}=c_i^2 \qquad (i=1,\ 2). \tag{85.12}$$

Here

$$c_i^2=\frac{a^2}{\lambda_i^2}-b^2, \quad z_i=\frac{z}{\lambda_i}; \tag{85.13}$$

λ_i are the roots of Eq. (79.7). In addition, we introduce the constants

$$p_i^2=\frac{a^2}{a^2-\lambda_i^2 b^2}. \tag{85.14}$$

If we set $q_i = p_i$, the two equations (85.12) transform into the equation of the surface of the ellipsoid (85.1), and this circumstance plays an important part in constructing the solution.

According to W.T. Chen, the functions giving a solution of the problem under consideration are of the form

$$\left.\begin{aligned}\Phi_1(r,\ z_1)&=A_1H(r,\ z_1),\\ \Phi_2(r,\ z_2)&=A_2H(r,\ z_2).\end{aligned}\right\} \tag{85.15}$$

Here A_1, A_2 are constants to be determined from conditions (85.5), (85.6) and the conditions at infinity, and

$$H(r,\ z)=\frac{1}{2}[z^2\psi_1(q)+r^2\psi_2(q)-c^2\psi_0(q)]. \tag{85.16}$$

Here

$$\left.\begin{aligned}\psi_0(q)&=0.5\ln\frac{q+1}{q-1},\\ \psi_1(q)&=0.5\ln\frac{q+1}{q-1}-\frac{1}{q},\\ \psi_2(q)&=-0.25\ln\frac{q+1}{q-1}+0.5\frac{q}{q^2-1}.\end{aligned}\right\} \tag{85.17}$$

Next, the values of Φ_1, Φ_2 must be substituted in the general formulas for the displacements and stresses (79.9), (79.10). The resulting formulas are rather unwieldy, and we shall not give them here, referring the interested readers to [60] (p. 772). We only note that the expressions for the left-hand sides of equalities (85.6) on the surface of the

cavity (inclusion) take a very simple form, which enables one to determine all constants, A_1, A_2, B_1, B_2.

In the case of an elastic inclusion, from the conditions for continuity of displacements (85.5) we obtain the equations

$$\left.\begin{aligned} A_1\psi_2(p_1)+A_2\psi_2(p_2)-B_1&=-v_r,\\ \frac{A_1k_1}{\lambda_1^2}\psi_1(p_1)+\frac{A_2k_2}{\lambda_2^2}\psi_1(p_2)-B_2&=-v_z,\end{aligned}\right\}\qquad(85.18)$$

and from the conditions for continuity of forces (85.4) or (85.6) we have

$$\left.\begin{aligned} &2A_1A_{44}(1+k_1)\psi_2(p_1)+2A_2A_{44}(1+k_2)\psi_2(p_2)+\\ &\qquad+2B_1A'_{13}+B_2A'_{33}=p_z,\\ &A_1\left[A_{44}\frac{1+k_1}{\lambda_1^2}\psi_1(p_1)+(A_{11}-A_{12})\psi_2(p_1)\right]+\\ &+A_2\left[A_{44}\frac{1+k_2}{\lambda_2^2}\psi_1(p_2)+(A_{11}-A_{12})\psi_2(p_2)\right]+\\ &\qquad+B_1(A'_{11}-A'_{12})+B_2A'_{13}=p_r\end{aligned}\right\}\qquad(85.19)$$

[k_1 and k_2 are determined by formula (79.6)].

Equations (85.18) and (85.19) give a system from which all four unknown constants are determined.

If an inclusion is absolutely rigid (non-deformable), it is necessary to set $B_1 = B_2 = 0$; the constants A_1 and A_2 are determined from the system

$$\left.\begin{aligned} A_1\psi_2(p_1)+A_2\psi_2(p_2)&=-v_r,\\ A_1\frac{k_1}{\lambda_1^2}\psi_1(p_1)+A_2\frac{k_2}{\lambda_2^2}\psi_1(p_2)&=-v_z,\end{aligned}\right\}\qquad(85.20)$$

In the case of a spheroidal cavity (having the shape of an ellipsoid of revolution) not filled with anything, we must also set $B_1 = B_2 = 0$; for the remaining constants, A_1 and A_2, we obtain, on the basis of the two conditions for forces (85.6), Eqs. (85.19) from which the terms containing B_1 and B_2 are deleted.

In [60] W.T. Chen considers in detail the case of a spherical cavity not filled with anything. For this case $a = b$,

$$p_i^2 = \frac{1}{1-\lambda_i^2}; \tag{85.21}$$

$$\left.\begin{aligned} \psi_0(p_i) &= \ln\left(\frac{1+\sqrt{1-\lambda_i^2}}{\lambda_i}\right), \quad (i=1,\ 2), \\ \psi_1(p_i) &= \ln\left(\frac{1+\sqrt{1-\lambda_i^2}}{\lambda_i}\right) - \sqrt{1-\lambda_i^2}, \\ \psi_2(p_i) &= 0.5\left[\frac{\sqrt{1-\lambda_i^2}}{\lambda_i^2} - \ln\left(\frac{1+\sqrt{1-\lambda_i^2}}{\lambda_i}\right)\right] \end{aligned}\right\} \tag{85.22}$$

The stresses in the space at the surface of the cavity are: at the points of the equator

$$(\sigma_z)_{\substack{z=0\\ q=p}} = A_1(1+k_1)\,\psi_1(p_1) + A_2(1+k_2)\,\psi_1(p_2) + p_z; \tag{85.23}$$

at the poles

$$(\sigma_r)_{\substack{r=0\\ q=p}} = A_1\left[\frac{2}{\lambda_1}(1+k_1) - \frac{A_{11}-A_{12}}{A_{44}}\right]\psi_2(p_1) + $$
$$+ A_2\left[\frac{2}{\lambda_2}(1+k_2) - \frac{A_{11}-A_{12}}{A_{44}}\right]\psi_2(p_2) + p_r. \tag{85.24}$$

In [60] are given two tables of values of the stresses at the equator and at the poles of a spherical cavity for several substances crystallizing in the hexagonal system (the equations and formulas for them are the same as for a transversely isotropic body). Two types of loading have been considered: (1) uniaxial tension in a direction normal to the planes of isotropy ($p_r = 0$, $p_z > 0$) and (2) uniform tension ($p_r = p_z = p$). Below are two tables taken from [60].*

By analysing the data of Tables 24 and 25, it may be noted that, in general, the stresses in the materials considered differ very little at the corresponding points at the cavity surface, so that the materials in question may be described as low anisotropic. It does not, of course, follow that all materials are low anisotropic.

In uniaxial tension, the numerically greatest stresses occur at the equator of the cavity. In uniform tension, the

* The numerical values of the elastic constants are taken from [70].

Stresses at the Cavity Surface in Uniaxial Tension Table 24

Material	Stresses	
	at equator σ_z/p_z	at poles σ_r/p_z
Isotropic material ($\nu=0.3$)	2.046	—0.682
Zinc	1.626	—1.019
Magnesium	2.129	—0.638
β-quartz	2.027	—0.490
Cadmium	1.791	—1.090
Cobalt	2.306	—0.635
Barium titanate (ceramics)	2.080	—0.654

Stresses at the Cavity Surface in Uniform Tension Table 25

Material	Stresses	
	at equator σ_z/p	at poles σ_r/p
Zinc	1.403	0.654
Magnesium	1.559	1.695
β-quartz	1.603	1.323
Cadmium	1.524	0.855
Cobalt	1.626	2.093
Barium titanate (ceramics)	1.450	1.639

numerically greatest stresses may occur at the equator, but for some materials they may occur near the poles (see Table 25).

86. Stress Distribution in the Wall of a Spherical Vessel under Internal and External Pressure

We close this chapter by considering an elastic body in the form of a hollow sphere (spherical vessel) acted on by an internal pressure p distributed uniformly over the surface, and an external pressure q, also distributed uniformly.

Elastic equilibrium of an isotropic sphere, hollow or solid, is fairly well studied.* If, however, the sphere is

* See, for example, [29], Chap. 11, and [30], Chap. 5.

not isotropic, the cases so far studied are much fewer in number. We shall consider only the simplest problem for an anisotropic hollow sphere solved by Saint-Venant [113]. Namely, the material of a given body is assumed to possess transverse isotropy about any radius vector drawn from the common centre of the spheres to a given point.

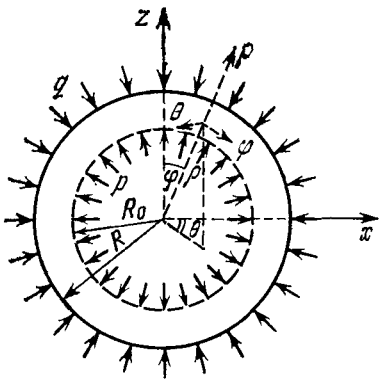

Fig. 113

The investigation is most conveniently carried out by using a spherical co-ordinate system ρ, θ, φ with origin at the centre of the spheres. The x and z axes from which the angles θ and φ are measured are directed arbitrarily at right angles to each other (Fig. 113). We introduce the notation: R, R_0 = outer and inner radii; σ_ρ, σ_θ, σ_φ, $\tau_{\theta\varphi}$, $\tau_{\rho\varphi}$, $\tau_{\rho\theta}$ = stress components on planes normal to the co-ordinate directions ρ, θ, φ; ε_ρ, ε_θ, ε_φ, $\gamma_{\theta\varphi}$, $\gamma_{\rho\varphi}$, $\gamma_{\rho\theta}$ = = extensions and shears for the co-ordinate directions.

The generalized Hooke's law equations in a spherical co-ordinate system may be written in different ways. If the engineering constants are introduced, the equations take the form

$$\left.\begin{aligned}
\varepsilon_\rho &= \frac{1}{E'}\sigma_\rho - \frac{\nu'}{E'}(\sigma_\varphi + \sigma_\theta),\\
\varepsilon_\varphi &= -\frac{\nu'}{E'}\sigma_\rho + \frac{1}{E}(\sigma_\varphi - \nu\sigma_\theta),\\
\varepsilon_\theta &= -\frac{\nu'}{E'}\sigma_\rho + \frac{1}{E}(-\nu\sigma_\varphi + \sigma_\theta),\\
\gamma_{\theta\varphi} &= \frac{1}{G}\tau_{\theta\varphi} = \frac{2(1+\nu)}{E}\tau_{\theta\varphi},\\
\gamma_{\rho\varphi} &= \frac{1}{G'}\tau_{\rho\varphi}, \qquad \gamma_{\rho\theta} = \frac{1}{G'}\tau_{\rho\theta}.
\end{aligned}\right\} \tag{86.1}$$

Here E' and E are Young's moduli for tension along a radius vector ρ and in a direction perpendicular to it; ν' is Poisson's ratio characterizing transverse contraction in directions perpendicular to ρ when tension is applied in the ρ direction; ν is Poisson's ratio characterizing contraction in a plane normal to a radius vector for tension in the same plane; G, G' are the shear moduli for planes normal to ρ and for (diametral) planes passing through the centre. The generalized Hooke's law equations solved for the stress components are of the form

$$\left.\begin{aligned}
\sigma_\rho &= A_{11}\varepsilon_\rho + A_{12}(\varepsilon_\varphi + \varepsilon_\theta),\\
\sigma_\varphi &= A_{12}\varepsilon_\rho + A_{22}\varepsilon_\varphi + A_{23}\varepsilon_\theta,\\
\sigma_\theta &= A_{12}\varepsilon_\rho + A_{23}\varepsilon_\varphi + A_{22}\varepsilon_\theta,\\
\tau_{\theta\varphi} &= \frac{1}{2}(A_{22} - A_{23})\gamma_{\theta\varphi},\\
\tau_{\rho\varphi} &= A_{44}\gamma_{\rho\varphi}, \quad \tau_{\rho\theta} + A_{44}\gamma_{\rho\theta}.
\end{aligned}\right\} \tag{86.2}$$

The elastic moduli A_{ij} are related to E, G, ν as follows:

$$\left.\begin{aligned}
A_{11} &= \frac{E'(1-\nu)}{m}, \qquad A_{12} = \frac{E\nu'}{m},\\
A_{22} &= \frac{E}{(1+\nu)m}\left(1 - \nu'^2\frac{E}{E'}\right),\\
A_{23} &= \frac{E}{(1+\nu)m}\left(\nu + \nu'^2\frac{E}{E'}\right),\\
A_{44} &= G', \qquad \frac{1}{2}(A_{22} - A_{23}) = G = \frac{E}{2(1+\nu)},
\end{aligned}\right\} \tag{86.3}$$

where

$$m = 1 - \nu - 2\nu'^2\frac{E}{E'}. \tag{86.4}$$

It is obvious that in the case of the elastic properties indicated the distribution of stress and strain depends only on one variable, ρ, and all points are displaced only in radial directions during deformation.* Denoting the single (radial) component of displacement by $u(\rho)$, we have

* Of course, if possible rigid-body displacements of a body as a whole (involving no deformation) are rejected.

the strain components referred to spherical co-ordinates:

$$\varepsilon_\rho = \frac{du}{d\rho}, \quad \varepsilon_\varphi = \varepsilon_\theta = \frac{u}{\rho}, \quad \gamma_{\theta\varphi} = \gamma_{\rho\varphi} = \gamma_{\rho\theta} = 0. \tag{86.5}$$

Since all shears are zero, it follows that the shearing stresses proportional to them are zero, i.e., $\tau_{\theta\varphi} = \tau_{\rho\varphi} = \tau_{\rho\theta} = 0$, and $\sigma_\varphi = \sigma_\theta$. Of the equilibrium equations for a continuous body referred to a spherical co-ordinate system there remains only one:

$$\frac{d\sigma_\rho}{d\rho} + \frac{2}{\rho}(\sigma_\rho - \sigma_\varphi) = 0. \tag{86.6}$$

The conditions on the outer and inner surfaces are:

$$\begin{aligned} &\text{when } \rho = R, \quad \sigma_\rho = -q; \\ &\text{when } \rho = R_0, \quad \sigma_\rho = -p. \end{aligned} \tag{86.7}$$

In this problem it is more convenient to use, not the stress functions, but the displacement u as the basic function. Substituting the first three expressions for the stresses from the generalized Hooke's law equations (86.2) in (86.6), we obtain an equation for the displacement:

$$\frac{d^2u}{d\rho^2} + \frac{2}{\rho}\frac{du}{d\rho} - 2\frac{A_{22}+A_{23}-A_{12}}{A_{11}}\frac{u}{\rho^2} = 0. \tag{86.8}$$

We introduce the notation:

$$n = \sqrt{\frac{1}{4} + 2\frac{A_{22}+A_{23}-A_{12}}{A_{11}}}; \tag{86.9}$$

$$\left.\begin{aligned} \lambda_n &= \frac{A_{22}+A_{23}+A_{12}(n-0.5)}{2A_{12}+A_{11}(n-0.5)}, \\ \lambda_{-n} &= \frac{A_{22}+A_{23}-A_{12}(n+0.5)}{2A_{12}-A_{11}(n+0.5)}. \end{aligned}\right\} \tag{86.10}$$

The general integral of Eq. (86.8) is of the form

$$u = A\rho^{n-0.5} + B\rho^{-n-0.5}. \tag{86.11}$$

Substituting in (86.2), and determining the constants A and B from the surface conditions (86.7), we find

$$\left.\begin{aligned} A &= \frac{pc^{1.5+n}-q}{1-c^{2n}}\frac{R^{1.5-n}}{2A_{12}+A_{11}(n-0.5)}, \\ B &= \frac{q-pc^{1.5-n}}{1-c^{2n}}\frac{c^{2n}R^{1.5-n}}{2A_{12}-A_{11}(n+0.5)}. \end{aligned}\right\} \tag{86.12}$$

The formulas for the stress components are obtained as

$$\left.\begin{aligned}\sigma_\rho &= \frac{pc^{1.5+n}-q}{1-c^{2n}}\left(\frac{\rho}{R}\right)^{n-1.5}+\\ &\qquad+\frac{q-pc^{1.5-n}}{1-c^{2n}}c^{2n}\left(\frac{R}{\rho}\right)^{n+1.5},\\ \sigma_\theta=\sigma_\varphi &= \lambda_n\frac{pc^{1.5+n}-q}{1-c^{2n}}\left(\frac{\rho}{R}\right)^{n-1.5}+\\ &\qquad+\lambda_{-n}\frac{q-pc^{1.5-n}}{1-c^{2n}}c^{2n}\left(\frac{R}{\rho}\right)^{n+1.5}.\end{aligned}\right\}\quad(86.13)$$

The stresses attain their greatest values on planes passing through a radius vector, at the inner or outer surface. Denoting the ratio of the radii by $c = R_0/R$, we have: at the cavity surface ($\rho = R_0$),

$$\sigma_\theta=\sigma_\varphi=p\frac{\lambda_n c^{2n}-\lambda_{-n}}{1-c^{2n}}+qc^{n-1.5}\frac{\lambda_{-n}-\lambda_n}{1-c^{2n}};\quad(86.14)$$

at the outer surface ($\rho = R$),

$$\sigma_\theta=\sigma_\varphi=pc^{n+1.5}\frac{\lambda_n-\lambda_{-n}}{1-c^{2n}}+q\frac{\lambda_{-n}c^{2n}-\lambda_n}{1-c^{2n}}.\quad(86.15)$$

It is impossible to say beforehand which of the two quantities appearing on the right-hand sides of equalities (86.14) and (86.15) is numerically greater.

In the case of an isotropic material $n = 1.5$, and formulas (86.13) give the well-known solution:*

$$\left.\begin{aligned}\sigma_\rho &= \frac{pc^3-q}{1-c^3}+\frac{q-p}{1-c^3}c^3\left(\frac{R}{\rho}\right)^3,\\ \sigma_\theta=\sigma_\varphi &= \frac{pc^3-q}{1-c^3}-\frac{q-p}{1-c^3}c^3\left(\frac{R}{\rho}\right)^3.\end{aligned}\right\}\quad(86.16)$$

* See the first footnote at the beginning of this section.

References

BOOKS

1. Ambartsumyan S.A., "Theory of Anisotropic Shells," Fizmatgiz, Moscow, 1961 (in Russian).
2. Ambartsumyan S.A., "Theory of Anisotropic Plates," Fizmatgiz, Moscow, 1967 (in Russian).
3. Ambartsumyan S.A., "General Theory of Anisotropic Shells," Nauka, Moscow, 1974 (in Russian).
4. Arutyunyan N.Kh., Abramyan B.L., "Torsion of Elastic Bodies," Fizmatgiz, Moscow, 1963 (in Russian).
5. Ashkenazi E.K., "Anisotropy of Engineering Materials," Mashinostroenie, Leningrad, 1969 (in Russian).
6. Ashkenazi E.K., Ganov E.V., "Anisotropy of Structural Materials. Handbook," Mashinostroenie, Leningrad, 1972 (in Russian).
7. Ashkenazi E.K., Golfman I.B., Rozhkov L.P., Sidorov N.P., "Parts of Glass-fibre Reinforced Plastics in Ship Mechanical Engineering," Sudostroenie, Leningrad, 1974 (in Russian).
8. Bekhterev P., "Analytic Investigation of the Generalized Hooke's Law," P. 1, 2, author's edition (lithograph), Leningrad, 1925 (in Russian).
9. Borş C.J., "Teoria elasticitätii corpurilör anizotrope," Ed. Acad. republ. soc. România, Bucureşti, 1970.
10. Burov A.K., Andreevskaya G.D., "High-strength CBAM Glass-fibre Reinforced Plastics," Izd. Akad. Nauk SSSR, Moscow, 1958 (in Russian).
11. Flint E.E., "A Practical Aid to Geometrical Crystallography," 3rd ed., Gosgeoltekhizdat, Moscow, 1956 (in Russian).
12. Gradshtein I.S., Ryzhik I.M., "Tables of Integrals, Sums, Series, and Products," 5th ed., Nauka, Moscow, 1971 (in Russian).
13. Green A.E., Zerna W., "Theoretical Elasticity", Oxford Univ. Press, London, 1954.
14. "Handbook of Physical Constants" (The Geological Society of America, Inc. Memoir 97), rev. ed. (Sydney P. Clark, Jr., ed.), The Society, New York, 1966.
15. Kintsis T.Ya., Roze A.V., Zhigun I.G., "Static Testing Methods for Reinforced Plastics," Zinatne, Riga, 1972 (in Russian).
16. Kolchin G.B., "Design of Structural Elements of Elastic Nonhomogeneous Materials," Kartya Moldovenyaske, Kishinev, 1971 (in Russian).

17. Kolchin G.B., "Plane Problems of the Theory of Elasticity for Non-homogeneous Bodies," Shtiintsa, Kishinev, 1977 (in Russian).
18. Kolchin G. B., Faverman E. A., "Theory of Elasticity for Non-homogeneous Bodies. Bibliographical Index of Our Country's and Foreign Literature," Shtiintsa, Kishinev, 1972 and 1977 (in Russian).
19. Korn G. A., Korn Th. M., "Mathematical Handbook for Scientists and Engineers," 2nd ed., McGraw-Hill Book Co., New York, 1968.
20. Kosmodamianskii A.S., "State of Stress in Anisotropic Media with Holes or Cavities," Vishcha Shkola, Kiev-Donetsk, 1976 (in Russian).
21. Landau L.D., Liftshits E. M., "Mechanics of Continua," 2nd ed., Gostekhizdat, Moscow, 1953 (in Russian).
22. Landolt H.H., Börnstein R., "Zahlenwerte und Funktionen aus Physik, Chemie, Astronomie, Geophysik und Technik," 6. Aufl., Bd. 1, Atom- und Molekularphysik, T. 4, Kristalle, Springer, Berlin, 1955.
23. Leibenzon L.S., "Variational Methods for the Solution of Problems in the Theory of Elasticity," Gostekhizdat, Moscow, 1943 (in Russian).
24. Leibenzon L. S., "A Course in Elasticity Theory," Gostekhizdat, Moscow, 1947 (in Russian).
25. Leibenzon L. S., "Collected Works," Vol. I, Theory of Elasticity, Izd. Akad. Nauk SSSR, Moscow, 1951 (in Russian).
26. Lekhnitskii S. G., "Theory of Elasticity of an Anisotropic Body," Gostekhizdat, Moscow, 1950 (in Russian). Transl.— "Theory of Elasticity of an Anisotropic Elastic Body," Holden-Day, San Francisco, 1963.
27. Lekhnitskii S. G., "Anisotropic Plates," 2nd ed., Gostekhizdat, Moscow, 1957 (in Russian).
28. Lekhnitskii S.G., "Torsion of Anisotropic and Non-homogeneous Bars," Nauka, Moscow, 1971 (in Russian).
29. Love A.E.H., "A Treatise on the Mathematical Theory of Elasticity," 4th ed., Cambridge Univ. Press, Cambridge, 1927.
30. Lur'e A.I., "Theory of Elasticity," Nauka, Moscow, 1970 (in Russian).
31. Malmeister A.K., Tamuzh V.P., Teters G.A., "Resistance of Rigid Polymeric Materials," 2nd ed., Zinatne, Riga, 1972 (in Russian).
32. Muskhelishvili N. I., "Some Basic Problems of the Mathematical Theory of Elasticity; Fundamental Equations, Plane Theory of Elasticity, Torsion and Bending," 5th ed., Nauka, Moscow, 1966 (in Russian). Transl.— P. Noordhoff, Groningen, 1953 (Translation of the 3rd ed., Izd. Akad. Nauk SSSR, Moscow-Leningrad, 1949).
33. Neumann F., "Vorlesungen über die Theorie der Elastizität," Teubner, Leipzig, 1885.
34. Novozhilov V.V., "Theory of Elasticity," Sudpromgiz, Leningrad, 1958 (in Russian). Transl.— Pergamon Press, New York, 1961.

35. Sarkisyan V.S., "Some Problems of the Mathematical Theory of Elastic Anisotropic Bodies," Izd. Erevansk. Univ., Erevan, 1976 (in Russian).
36. Savin G.N., "Stress Distribution Around Holes," Naukova Dumka, Kiev, 1968 (in Russian).
37. Timoshenko S. P., Goodier J. N., "Theory of Elasticity," 3rd ed., McGraw-Hill Book Co., New York, 1970.
38. Voigt W., "Lehrbuch der Kristallphysik," Teubner, Leipzig-Berlin, 1928.
39. Watson G. N., "A Treatise on the Theory of Bessel Functions," 2nd ed., Part 1, Univ. Press, Cambridge; Macmillan Co., New York, 1945.

PAPERS

40. Abramyan B.L., Babloyan A.A., Torsion of an Anisotropic Cylinder, *Dokl. Akad. Nauk Arm. SSR*, 27(5), 269-275 (1958) (in Russian).
41. Aleksandrov K.S., Ryzhova T. V., Elastic Properties of Crystals. A Survey, *Kristallografiya*, 6 (2), 289-314 (1961) (in Russian).
42. Almansi E., Sopra la deformazione dei cilindri sollecitate lateralmente, *Atti Reale Accad. naz. Lincei. Rend. Cl. sci. fis., mat. e natur.* Ser. 5, 10, 333-338 (1901).
43. Arutyunyan N.Kh., On the Torsion of an Elliptical Ring Sector, *Prikl. Matem. i Mekh.*, 11 (5), 543-546 (1947) (in Russian).
44. Arutyunyan N.Kh., Approximate Solution of Some Torsion Problems for Anisotropic Bars, *Soobsch. Inst. Matem. i Mekh. Akad. Nauk Arm. SSR*, No. 2, 41-55 (1948) (in Russian).
45. Ashkenazi E.K., Morozov A.S., An Experimental Procedure for Investigating Elastic Properties of Composites, *Zavodsk. Labor.*, No. 6, 731-735 (1976) (in Russian).
46. Ashkenazi E. K., Gotlib Ts. A., Sborovskii A. K., Chumakova R.Yu., Nikiforov N. N., The Effect of Reinforcement Schemes and Fabricating Techniques on the Anisotropy of Elastic Properties and Strength of Glass-fibre Reinforced Plastics in Compression, *Voprosy Sudostroeniya. Ser. Tekhnologiya Sudostroeniya*, Vyp. 12, 134-142 (1976) (in Russian).
47. Auerbach F., Elastizität der Kristalle, in "Handbuch der physikalischen und technischen Mechanik," Bd. 3, J. A. Barth, Leipzig, 1927, pp. 239-282.
48. Babloyan A. A., On a Problem of the Axially Symmetric Deformation of a Finite-length Circular Cylinder of Transversely Isotropic Material, *Dokl. Akad. Nauk Arm. SSR*, 32(4), 189-195 (1961) (in Russian).
49. Babloyan A. A., On Problem of the Axially Symmetric Deformation of a Finite-length Circular Cylinder of Transversely Isotropic Material, *Izv. Akad. Nauk Arm. SSR, Fiz.-mat. Nauki*, 14(4), 61-70 (1961) (in Russian).
50. Batugin S. A., Nirenburg R.K., Approximate Relationship Among the Elastic Constants of Anisotropic Rocks, and Aniso-

tropy Parameters, *Fiz.-tekhn. Probl. Razrabotki Polezn. Iskopaemykh*, 7(1), 7-11 (1972) (in Russian).
51. Bekhterev P., Analytic Investigation of the Generalized Hooke's Law, *Zh. Russk. Fiz.-khim. Obschestva*, 57(3-4), 359-392 (1925); 58(3), 415-446 (1926) (in Russian).
52. Bert C.W., Displacements in a Polar-orthotropic Disk of Varying Thickness, *Z. angew. Math. und Phys.*, 14(2), 101-111 (1963).
53. Bhowmick S.K., Stresses Due to Spheroidal Inclusion of Material Having Curvilinear Aeolotropy on the Axis of a Large Twisted Isotropic Cylinder, *Arch. mech. stosow.*, 13(3), 321-325 (1961).
54. Bhowmick S.K., Stress Concentrations Around a Small Rigid Spheroidal Inclusion on the Axis of a Transversely Isotropic Cylinder under Torsion, *AIAA Journal*, 1(5), 1219-1220 (1963).
55. Bolotin V.V., Plane Problem of the Theory of Elasticity for Parts of Reinforced Materials, in "Raschety na Prochnost. Sbornik Statei" (Strength Design. Collected Papers), Vyp. 12, Mashinostroenie, Moscow, 1966 pp. 3-31 (in Russian).
56. Bose S.C., On the Torsion of a Circular Cylinder of Transversely Isotropic Material Having a Spherical Inclusion of Spherically Isotropic Material on Its Axis, *Indian J. Theor. Phys.*, 12(2), 29-38 (1964).
57. Bose S. C., Torsion of an Aeolotropic Cylinder Having a Spheroidal Inclusion on Its Axis, *AIAA Journal*, 3(7), 1352-1354 (1965).
58. Bose S.C., On the Torsion of a Transversely Isotropic Circular Cylinder Having a Small Spherical Elastic Inclusion of an Isotropic Material, *Z. angew. Math. und Mech.*, 45(2/3), 133-135 (1965).
59. Chattarji P.P., Torsion of a Circular Cylinder Having a Rigid Spherical Inclusion, *Bull. Calcutta Math. Soc.*, 49 (4), 199-205 (1957).
60. Chen W.T., Axisymmetric Stress Field Around Spheroidal Inclusions and Cavities in a Transversely Isotropic Material, *Trans. ASME*. Ser. E, *J. Appl. Mech.*, 35(4), 770-773 (1968).
61. Chentsov N.G., Analysis of Plywood as an Orthotropic Plate, *Tekhn. Zametki Tsentr. Aero-gidrodin. Inst.*, No. 91, 1-27 (1936) (in Russian).
62. Das S. C., Stress Concentration Around a Small Spherical and Spheroidal Inclusion on the Axis of a Circular Cylinder in Torsion, *Trans. ASME*. Ser. E, *J. Appl. Mech.*, 21(1), 83-87 (1954).
63. Deutsch E., Torsion of a Transversely Isotropic Semiinfinite Body, *Arch. mech. stosow.*, 15(4), 517-533 (1963).
64. Dutt S.B., Stress Concentrations Around a Small Spherically Isotropic Spherical Inclusion on the Axis of an Isotropic Circular Cylinder in Torsion, *Indian J. Technol.* (Calcutta), 3(1), 13-17 (1958).
65. Dzhanelidze G.Yu., Problems of the Theory of Elasticity for an Anisotropic Medium Reducible to Plane Problems, in "Problemy Mekhaniki Sploshnoi Sredy" (Problems of Continuum Mechanics—Contrib. in Honour of the 70th Birthday of Acad. N.I. Mu-

skhelishvili), Izd. Akad. Nauk SSSR, Moscow, 1961, pp. 145-151 (in Russian).
66. Elliott H.A., Three-dimensional Stress Distributions in Hexagonal Aeolotropic Crystals, *Proc. Cambridge Phil. Soc.*, 44(4), 522-533 (1948).
67. Eshelby J.D., Elastic Inclusions and Inhomogeneities, in "Progress in Solid Mechanics," Vol. II (I.N. Sneddon and R. Hill, eds.), North-Holland Publ. Co., 1961, pp. 87-140.
68. Geckeler J.W., Elastizitätstheorie anisotroper Körper (Kristallelastizität), in "Handbuch der Physik," Bd. VI, Mechanik der elastischen Körper, Springer-Verlag, Berlin, 1928, pp. 404-427.
69. Hu Hai-chang, On the Three-dimensional Problems of the Theory of Elasticity of a Transversely Isotropic Body, *Acta physica sinica*, 9(2), 130-147 (1953) (in Chinese); see also *Acta sci. sinica*, 2(2), 145-151 (1953) (in English).
70. Huntington H. B., The Elastic Constants of Crystals, in "Solid State Physics" (Advances in Research and Applications), Vol. 7 (F. Seitz and D. Turnbull, eds.), Acad. Press, New York, 1958, pp. 213-351.
71. Khatiashvili G. M., The Elastic Equilibrium of a Homogeneous Orthotropic Cylindrical Bar with Loaded Lateral Surface, *Trudy Vychisl. Tsentra Akad. Nauk Gruz. SSR*, 2, 123-142 (1961) (in Russian).
72. Khatiashvili G. M., The Almansi-Michell Problem for a Homogeneous Anisotropic Cylindrical Bar, *Trudy Vychisl. Tsentra Akad. Nauk Gruz. SSR*, 3, 141-160 (1963) (in Russian).
73. Khatkevich A. G., On the Elastic Constants of Crystals, *Kristallografiya*, 6 (5), 700-703 (1961) (in Russian).
74. Kosmodamianskii A. S., Bending of an Anisotropic Beam under Uniform Load, *Uchenye Zapiski Rostovsk. Gos. Univ.*, 32(4), 75-94 (1955) (in Russian).
75. Kosmodamianskii A. S., Bending of an Anisotropic Beam under Distributed Load, *Inzhenernyi Sb.*, 24, 114-126 (1956) (in Russian).
76. Leibenzon L. S., Some Problems of the Bending and Torsion of Anisotropic Prisms, *Uchenye Zapiski Mosk. Gos. Univ.*, Vyp. 46, *Mekhanika*, 139-160 (1940) (in Russian).
77. Lekhnitskii S. G., Some Cases of the Elastic Equilibrium of a Homogeneous Cylinder with Arbitrary Anisotropy, *Prikl. Matem. i Mekh.*, 2(3), 345-367 (1939) (in Russian).
78. Lekhnitskii S. G., Generalized Plane Strain in an Infinite Elastic Anisotropic Half-space Bounded by the Surface of a Parabolic Cylinder, *Dokl. Akad. Nauk SSSR*, 25(3), 182-185 (1939) (in Russian).
79. Lekhnitskii S. G., Symmetrical Deformation and Torsion of a Body of Revolution with a Special Kind of Anisotropy, *Prikl. Matem. i Mekh.*, 4(3), 43-60 (1940) (in Russian).
80. Lekhnitskii S. G., On the Equilibrium of an Anisotropic Cantilever Beam, *Prikl. Matem. i Mekh.*, 6(1), 3-18 (1942) (in Russian).
81. Lekhnitskii S. G., Stress Distribution in an Elastic Bar with Curvilinear Anisotropy under a Tensile Force and Bending

Moments, *Prikl. Matem. i Mekh.*, 13(3), 307-316 (1949) (in Russian).
82. Lekhnitskii S. G., An Approximate Method for Determining Stresses in an Elastic Anisotropic Plate Around a Nearly Circular Hole, *Inzhenernyi Sb.*, 17, 3-28 (1953) (in Russian).
83. Lekhnitskii S. G., Stress Distribution in an Anisotropic Plate with an Elliptical Elastic Core (Plane Problem), *Inzhenernyi Sb.*, 19, 83-106 (1954) (in Russian).
84. Lekhnitskii S. G., Some Cases of the Elastic Equilibrium of an Anisotropic Plate with a Non-circular Hole (Plane Problem), *Inzhenernyi Sb.*, 22, 160-187 (1955) (in Russian).
85. Lekhnitskii S. G., Soldatov V. V., The Effect of the Position of an Elliptical Hole on Stress Concentration in an Orthotropic Plate under Tension. *Izv. Akad. Nauk SSSR, Otd. Tekhn. Nauk, Mekhanika i Mashinostroenie*, No. 1, 3-8 (1961) (in Russian).
86. Lekhnitskii S. G., Theoretical Investigation of Stresses in an Elastic Anisotropic Block Near a Mine of Elliptical Section, in "Trudy po Voprosam Gornogo Davleniya, Sdvizheniya Gornykh Porod i Metodiki Marksheiderskikh Rabot" (Proceedings. Problems of Rock Pressure, Rock Slip, and Mine Surveying Technique). Sb. 45, Leningrad, 1962, pp. 155-179 (in Russian).
87. Lekhnitskii S. G., Radial Stress Distribution in a Wedge and a Half-plane with Variable Elastic Moduli, *Prikl. Matem. i Mekh.*, 26(1), 146-151 (1962) (in Russian).
88. Lekhnitskii S. G., Torsion of an Anisotropic Body of Revolution with Variable Elastic Moduli, *Prikl. Matem. i Mekh.*, 28(6), 1112-1116 (1964) (in Russian).
89. Lekhnitskii S. G., Uniaxial State of Stress in an Orthotropic Bar with Variable Elastic Moduli, *Izv. Akad. Nauk SSSR, Mekhanika i Mashinostroenie*, No. 1, 27-32 (1964) (in Russian).
90. Lekhnitskii S. G., Some Cases of the Torsion of Bars with Variable Elastic Moduli, in "Issled. po Uprugosti i Plastichnosti" (Investigations in Elasticity and Plasticity), Sb. 4, Leningr. Univ., Leningrad, 1965, pp. 72-85 (in Russian).
91. Lekhnitskii S. G., Plane Problem of the Theory of Elasticity for a Medium with Cylindrical Anisotropy and Variable Elastic Moduli, *Inzhenernyi Zh., Mekh. Tverd. Tela*, No. 1, 84-87 (1967) (in Russian).
92. Lekhnitskii S. G., Elementary Solutions of Two Special Problems of the Equilibrium of an Anisotropic Non-homogeneous Cylinder, in "Issled. po Uprugosti i Plastichnosti" (Investigations in Elasticity and Plasticity), Sb. 6, Leningr. Univ., Leningrad, 1967, pp. 3-9 (in Russian).
93. Lekhnitskii S. G., On a Special Case of the Axially Symmetric Deformation of a Cylinder with Elastic Moduli Varying Along Its Length, in "Issled. po Uprugosti i Plastichnosti" (Investigations in Elasticity and Plasticity), Sb. 7, Leningr. Univ., Leningrad, 1968, pp. 3-12 (in Russian).
94. Lekhnitskii S. G., Torsion of a Non-homogeneous Anisotropic Cylinder by Tangential Forces Distributed Over Its Ends, *Izv.*

Akad. Nauk SSSR, Mekh. Tverd. Tela, No. 5, 100-104 (1970) (in Russian).

95. Lekhnitskii S. G., The Saint-Venant Problem for a Continuously Non-homogeneous Anisotropic Bar, in "Mekhanika Sploshnoi Sredy i Rodstvennye Problemy Analiza" (Continuum Mechanics and Related Problems of Analysis—Contrib. in Honour of the 80th Birthday of Acad. N. I. Muskhelishvili), Nauka, Moscow, 1972, pp. 273-279 (in Russian).
96. Lokshin A. Sh., On the Torsion of Anisotropic Prisms, *Zapiski Dnepropetrovsk. Inst. Narod. Obraz.*, 53-59 (1927); in "Trudy Vserossiisk. S"ezda Matematikov v Moskve" (Proceedings of the All-Russia Congress of Mathematicians in Moscow), Gosizdat, Moscow-Leningrad, 1928, pp. 271-272 (in Russian).
97. Michell J. H., The Theory of Uniformly Loaded Beams, *Quart. J. Math.*, 32, 28-42 (1901).
98. Mikhlin S. G., Plane Strain in an Anisotropic Medium, *Trudy Seismol. Inst. Akad. Nauk SSSR*, No. 76, 1-19 (1936) (in Russian).
99. Minasyan R. S., On the Torsion and Bending of Anisotropic Prismatic Bars with a Cross Section in the Form of a Parallelogram, *Izv. Akad. Nauk Arm. SSR, Fiz.-mat. Nauki*, 11(3), 41-62 (1958) (in Russian).
100. Minchev I. T., On a Three-dimensional State of Stress and Strain in Continuous Layered Media, in "Mekhanika Sploshnykh Sred," Sbornik Materialov Mezhdunarodnoi Konferentsii po Mekhanike Sploshnykh Sred (Mechanics of Continua, Summaries of Papers Presented at the International Conference on the Mechanics of Continua, Varna, September 1966), Bulgarian Academy of Sciences Press, Sofia, 1968, pp. 337-342 (in Russian).
101. Mitinskii A. N., On the Determination of Stresses in a Drilled Wooden Tube Subjected to Internal Pressure, *Vestnik Inzhenerov i Tekhnikov*, No. 5, 300-301 (1936) (in Russian).
102. Mitinskii A. N., Stresses in a Thick-walled Anisotropic Tube under External and Internal Pressure, *Sb. Leningr. Inst. Inzh. Zh.-d. Transp.*, Vyp. 136 (Theoretical), 55-78 (1947) (in Russian).
103. Mossakowska Z., Stress Functions of Elastic Bodies with Three-dimensional Orthotropy, *Bull. Acad. polon. sci.* Cl. 4, 3(1), 3-6 (1955).
104. Mossakowski J., The Michell Problem for Anisotropic Semi-infinite Plate, *Arch. mech. stosow.*, 8 (4), 539-548 (1956).
105. Nowacki W., The Stress Function in Three-dimensional Problems Concerning an Elastic Body Characterized by Transverse Isotropy, *Bull. Acad. polon. sci.* Cl. 4, 2(1), 21-25 (1954).
106. Plotnikov M. M., On Stresses in a Thick-walled Non-homogeneous Anisotropic Tube, *Izv. Vuzov. Mashinostroenie*, No. 8, 21-26 (1959) (in Russian).
107. Plotnikov M. M., On the Analysis of aThick-walled Non-homogeneous Tube, *Izv. Vuzov. Mashinostroenie*, No. 12, 104-109 (1960) (in Russian).
108. Rabinovich A. L., On the Elastic Constants and Strength of

Aircraft Materials, *Trudy Tsentr. Aero-gidrodin. Instr.*, Vyp. 582, 1-56 (1946) (in Russian).
109. Rostovtsev N. A., On the Theory of Elasticity for Non-homogeneous Media, *Prikl. Matem. i Mekh.*, 28(4), 601-611 (1964) (in Russian).
110. Saint-Venant B., Mémoire sur la torsion des prismes, *Mémoires presentes par divers savants á l'académie des sciences. Sciences math. et phys.*, 14, Paris, 233-560 (1856).
111. Saint-Venant B., Mémoire sur la flexion des prismes, *J. math. pures et appl.* (Liouville). Sér II, 1, 89-189 (1856).
112. Saint-Venant B., Mémoire sur la distribution des élasticités, *J. math. pures et appl.* (Liouville). Sér. II, 8, 257-295, 353-430 (1863).
113. Saint-Venant B., Mémoire sur les divers genres d'homogénéité des corps solides, *J. math. pures et appl.* (Liouville). Sér. II, 10, 297-349 (1865).
114. Sarkisyan V. S., Torsion of Anisotropic Prismatic Bars with a Section in the Form of an Elongated Airfoil Profile, *Izv. Akad. Nauk Arm. SSR, Fiz.-mat. Nauki*, 14 (2), 45-70 (1961) (in Russian).
115. Sarkisyan V. S., Bending of Anisotropic Prismatic Bars of Elongated Symmetrical Section, *Izv. Akad. Nauk Arm. SSR, Fiz.-mat. Nauki*, 14 (4), 70-86 (1961) (in Russian).
116. Sarkisyan V. S., Torsion of Anisotropic Prismatic Bars of Elongated Section Made of Orthotropic Material, *Izv. Akad. Nauk Arm. SSSR, Fiz.-mat. Nauki*, 14(5), 59-70 (1961) (in Russian).
117. Sarkisyan V. S., On the Centre of Flexure of an Anisotropic Bar with an Elongated Symmetrical Airfoil Profile Made of Orthotropic Material, *Izv. Akad. Nauk Arm. SSR, Fiz.-mat. Nauki*, 15(4), 25-47 (1962) (in Russian).
118. Savin G. N., The Fundamental Plane Static Problem of the Theory of Elasticity for an Anisotropic Medium, *Trudy Inst. Stroit. Mekh. Akad. Nauk Ukr. SSR*, No. 32, 1-59 (1938) (in Ukrainian).
119. Sekerzh-Zen'kovich Ya. I., On the Stability Analysis of Sheet Plywood as an Anisotropic Plate, *Trudy Tsentr. Aerogidrodin. Inst.*, Vyp. 76, 3-26 (1931) (in Russian).
120. Sharmazanashvili A. Kh., Analysis of Anisotropic Thick-walled Spherical Shells, *Vestnik Inzhenerov i Tekhnikov*, No. 7, 35-37 (1938) (in Russian).
121. Sherman D. I., Plane Problem of the Theory of Elasticity for an Anisotropic Medium, *Trudy Seismol. Inst. Akad. Nauk SSSR*, No. 86, 51-78 (1938) (in Russian).
122. Somigliana C., Ricerche sulla deformazione ed i fenomeni piezoelettrici in un cilindro cristallino, *Ann. mat. pura ed appl.*, Milano. Ser. 2, 20, 61-99 (1892).
123. Soós E., Sur le problème de Saint-Venant dans le cas des barres hétérogènes avec anisotropie cylindrique, *Bull. math. soc. sci. math. et phys. RPR*, 7(1-2), 61-75 (1963).

124. Subramaniam R., Stress Concentration Around a Small Anisotropic Spheroidal Inclusion on the Axis of a Circular Cylinder in Torsion, *Arch. mech. stosow.*, **20**(1), 29-35 (1968).
125. Ter-Mkrtich'yan L. N., Some Probems of the Theory of Nonhomogeneous Elastic Media, *Prikl. Matem. i Mekh.*, **25**(6), 1120-1125 (1961) (in Russian).
126. Uzdalev A. I., The Elastic Equilibrium of a Bar Having Cylindrical Anisotropy under a Load Uniformly Distributed Along Its Length, *Inzhenernyi Sb.*, **26**, 148-160 (1958) (in Russian).
127. Vasil'ev V. Z., Stresses in an Elastic Isotropic Half-space Near the Bottom of a Vertical Cylindrical Cavity, *Prikl. Mekhanika* (Kiev), 3(7), 109-117 (1967) (in Russian).
128. Voigt W., Ueber die Elasticitätsverhältnisse cylindrisch aufgebauter Körper, *Nachr. Gesellsch. Wiss. Göttingen. Math.-phys. Kl.*, H. 6, 505-514 (1886).
129. Wolf K., Ausbreitung der Kraft in der Halbebene und in Halbraum bei anisotropem Material, *Z. angew. Math. und Mech.*, 15(5), 249-254 (1935).
130. Zhitkov P. N., Plane Problem of the Theory of Elasticity for a Non-homogeneous Orthotropic Body in Polar Co-ordinates, *Trudy Voronezhsk. Gos. Univ.*, **27**, 20-29 (1954) (in Russian).

Name Index

Abramyan B. L., 263, 282, 360, 416, 418
Aleksandrov K. S., 59, 418
Almansi E., 328, 418
Ambartsumyan S. A., 416
Andreevskaya G. D., 65, 416
Arutyunyan N. Kh., 263, 292, 360, 416
Ashkenazi E. K., 43, 4,9 57, 62, 64f, 416, 418
Auerbach F., 59, 418

Babloyan A. A., 383, 387, 389f, 418
Batugin S. A., 60, 191, 418
Bekhterev P. V., 10, 27, 30, 381, 416, 419
Bert C. W., 243, 419
Bhowmick S. K., 369, 419
Bolotin V. V., 65, 419
Börnstein R., 417
Borş C. J., 416
Bose S. C., 368, 419
Burov A. K., 65, 416

Chattarji P. P., 369, 419
Chen W. T., 384, 405ff, 410,419
Chentsov N. G., 30f, 49, 419

Das S. C., 367, 419
Deutsch E., 419
Dutt S. B., 364, 419
Dzhanelidze G. Yu., 328, 419

Elliott H. A., 383, 386, 420
Eshelby J. D., 407, 420

Faverman E. A., 12, 417
Flint E. E., 416

Galerkin B. G., 13
Ganov E. V., 43, 49, 57, 62, 416
Geckeler J. W., 59, 420
Goodier J. N., 399, 418
Gradshtein I. S., 416
Green A. E., 416

Hu Hai-chang 385ff, 420
Huntington H. B., 410, 420

Khatiashvili G. M., 328, 420
Khatkevich A. G., 420
Kintsis T. Ya, 65, 416
Kolchin G. B., 12, 214, 417
Kolosov G. V., 15
Korn G. A., 254, 291, 417
Korn Th. M., 254, 291, 417
Kosmodamianskii A. S., 179, 328, 417, 420

Landau L. D., 417
Landolt H. H., 416
Leibenzon L. S., 16, 19, 76, 78f, 87, 276, 289f, 292, 324, 327, 335, 337, 417, 420
Lekhnitskii S. G., 150, 170, 179, 197, 205, 263, 292, 303, 308, 310, 312, 315, 337, 344, 353, 360, 363, 391, 398, 417, 420f
Lifshits E. M., 417
Lokshin A. Sh., 276, 422

Love A. E. H., 16, 33, 39, 58, 276, 359, 379, 382, 404, 417
Lur'e A. I., 405, 412, 417

Malmeister A. K., 27, 32, 417
Michell J. H., 328, 422
Mikhlin S. G., 143, 422
Minasyan R. S., 287, 422
Minchev I. T., 422
Mitinskii A. N., 234, 422
Morozov A. S., 65, 418
Mossakowska Z., 422
Mossakowski J., 158, 422
Muskhelishvili N. I., 13, 107, 140, 147, 150, 158, 204, 417

Neumann F., 33, 417
Nirenburg R. K., 60, 191, 418
Novozhilov V. V., 16, 29, 217, 417
Nowacki W., 387, 422

Papkovich P. F., 13
Plotnikov M. M., 243, 258, 422

Rabinovich A. L., 30f, 43, 54, 61, 79, 422
Rose A. V., 65, 416
Rostovtsev N. A., 210, 423
Ryzhik I. M., 416
Ryzhova T. V., 59, 418

Saint-Venent B., 10, 53, 55, 68, 79, 82, 138, 142, 220, 222, 230, 234, 263, 276f, 288, 324, 327, 329, 331, 334, 412, 423
Sarkisyan V. S., 337, 418, 423
Savin G. N., 143, 418, 423
Sekerzh-Zen'kovich Ya. I., 30, 423
Sharmazanashvili A. Kh., 423
Soldatov V. V., 170, 421
Somigliana C., 100, 423
Soós E., 243, 245, 423
Subramaniam R., 369, 423

Tamazh V. P., 32, 417
Teters G. A., 32, 417
Timoshenko S. P., 399, 418

Uzdalev A. I., 328, 424

Vasil'ev V. Z., 392, 424
Voigt W., 27, 58, 69, 79, 110, 234, 263, 277, 310, 315, 418, 424

Wolf K., 398, 424
Watson G. N., 374, 418

Zerna W., 416
Zhigun I. G., 65, 416
Zhitkov P. N., 243, 424

Subject Index

Aleurolith, elastic constants of, 59
Angle of twist, 91, 270, 272, 294, 298, 310, 362, 364
Anisotropic elastic materials, modern, 58ff
  crystalline, 58
  non-crystalline, 60ff
Anisotropy,
  axis of, 68, 71, 124
  centre of, 71f
  curvilinear, 25, 67f
  cylindrical, 68ff, 2i5ff
  measure of, 171
  parameters of, 191f
  rectilinear, 25ff, 66
  spherical, 71
Anisotropy diagrams, 56f
Axially symmetric deformation, 376ff
  of body of revolution, 376ff, 387ff, 393ff, 401ff, 411ff
    general equations, 377ff, 383ff
    transversely isotropic, 382ff, 390ff, 393ff, 398
  theory of, 376

Bar, bending of, 90f, 96
  extension of, 79f, 96
  homogeneous, 79
  non-homogeneous, 210
  torsion of, 263ff
Basic variational principles, 73ff
Beam, 214
  on two supports, 92
Bending,
  of bar, 90ff, 96
  of beam, 92ff, 214
  of cantilever, 314ff, 323ff, 335ff, 344ff, 349ff
    of elliptical (circular) section, 328ff
    of rectangular section, 331ff, 341ff
  of curved rod, 256ff
  of cylinder, 96ff
  generalized, 314ff
  moment, 90ff, 95
  of rectangular plate, 93ff
  stress function in, 324
  theory of, 91, 95, 334f
Bessel's function, 254, 302, 373ff, 387, 393ff
Body,
  anisotropic, 25
    curvilinearly, 67, 72
    cylindrically, 124ff, 215ff
    rectilinearly, 28, 134f
  homogeneous, 25
  isotropic, 25
    transversely 30, 32, 37
  orthotoropic, 30, 32, 35f
  of revolution, 352ff, 376ff
  transtropic, 38

Cantilever, 90, 314, 323, 328, 331, 335, 337, 344, 349
Castigliano's variational formula, 77, 288, 335
Cavity, 159, 363ff, 404ff
Chentsov's coefficients, 31,267
Complex parameters, 51, 117
Complex potential, 118ff, 274
Composite materials, 64ff
Concentration of stress, 363
  factor of, 367

Continuous medium,
differential equations for, 20
states of stress and strain, 15
Co-ordinates in three-dimentional space, 16
Core (*see also* Inclusion), 193ff
stresses in, 197ff
Couple stresses, 15
Curved rod,
bending by force, 260ff
pure bending by moments, 258ff
Cutout, 137
Cylinder,
bending of, 96ff, 144ff
extension of, 144ff
torsion of, 308ff

Dilatation, 85ff
Dini-Bessel series, 373
Direction curve, 54
Direction surface, 52ff
Double integrals, 108

Elastic characteristics, 27
Elastic constants, 27ff, 48, 52ff, 58ff, 63f, 70
for crystals, 59
reduced, 49f, 218
variation of, 52ff
Elastic equilibrium, 74
Elastic half-plane, 147, 153, 158
Elastic half-space, 147, 150ff, 157f
Elastic potential, 27f, 34, 39f, 58, 116, 380
Elastic properties of rocks, 59ff
Elastic space, 159
Elastic symmetry, 33ff, 58
plane of, 34
Elasticity of crystals, 58
Energy method, 288
Engineering constants, 30, 32, 36, 38, 170

Flamant's problem, 157
Flexure function, 336
Fundamental problem of elastostatics,
first, 74, 106, 120, 144, 162
mixed, 75
second, 74, 107, 120, 150, 162, 169

Generalized plane strain, 134f, 147, 215, 220, 234
Generalized plane stress, 62, 139, 143, 145, 154, 207, 226, 230
Glass-fibre reinforced plastics, 64ff, 181ff

Half-plane, 147, 153ff, 158, 206
isotropic, 156
non-orthotropic, 158
orthotropic, 158
radial stress distribution in, 206ff
Half-space, 147, 150ff, 157f
Hooke's law, generalized, 24ff, 32, 38, 59, 63ff, 70f, 124, 126, 132, 171, 194, 211, 217, 227, 251, 254, 257, 263, 276, 293, 309, 353, 355, 359f, 364, 377, 391, 412ff
Inclusion (*see also* Core), 363ff, 404ff
Isobar, 155, 209

Kilogram-force, 58
Kirchhoff's theorem, 76

Lagrange's variational equation, 76, 335
Lamé's problem, 251
Least work principle, 77, 288

Mapping, 150, 162, 205
Matrix, 406f
Measure of anisotropy, 171
Mixed problem of elastostatics, 75
Muskhelishvili's method, 150, 158

Neumann's function, 254
Neumann's principle, 33

Operator, differential, 108, 380

Plate,
  with core, 193ff
  with hole, 170ff, 179ff
  rectangular, 210ff
Plane problem, 47, 140, 143, 149, 150, 164, 169, 179
  solution of, 204ff
Plane strain, 134f, 139, 143f, 149, 153, 162, 221, 254
  generalized, 134, 147, 215, 220, 234
Plane stress, 179
  generalized, 62, 139, 143, 145, 154, 207, 226, 230
Plywood,
  kinds of, 63f
  plate, 62ff, 173f, 180
Poisson's ratio, 30f
Prandtl's analogy, 292

Quartz, elastic constants of, 58

Reduced strain coefficients, 104, 347
Relation between strain components and displacement projections, 18ff
Rigid-body displacements, 80, 97, 102
Rigidity, 95, 272, 278ff, 290f, 298, 306, 309, 312f, 321
  torsional, 267, 270, 279, 285, 291
    generalized, 267, 270, 278
Rocks, elastic constants of, 60

Saint-Venant's principle, 79, 82, 138, 142, 220, 222, 230
Scale factor, 53
Second-degree surface, 83
Shear, 30, 83ff
  moduli, 30f
Small parameter method, 337
Spherical co-ordinates, 358
State of stress, 15, 73, 264, 271
Strain,
  coefficients, 26f, 250
    reduced, 104, 347
  components, 18, 26f
  energy, 76f, 114
Stress(es), 16ff
  components, 16ff, 26
    transformation to new axes, 21ff
  normal, 16ff
  shearing, 16ff
  tensor, 16f
Stress distribution, 79ff, 87ff
  axially symmetric, 230ff
  in bar, 81ff, 96ff, 363
  in cantilever, 90ff, 328ff, 349
  in cone, 401ff
  in cylinder, 96ff, 99ff, 124ff, 215ff, 227ff, 231ff, 242ff, 250ff, 255ff, 367
  in half-space, 124ff, 147ff, 390ff, 393ff, 397ff, 400
  in inclusion, 193ff, 404ff
  in non-homogeneous body 121ff, 131ff
  in plate, with core, 193ff
    with hole, 170ff, 179ff
  in space, 159ff
  in spherical vessel wall, 411ff
Stress function, 105ff, 112ff, 117, 123, 128, 273, 324, 355, 360, 372, 379f
Stress-strain relations, 15
Structural symmetry, 65

Tensile stress concentration factor, 186
Tension coefficient surface, 55
Theory,
  of axially symmetric deformation, 376
  of bending, 334f
  of torsion, 352ff
Torsion,
  of bar, 263ff, 268ff, 271ff, 276ff, 293ff, 363ff
    cylindrical (prismatic), 304ff, 312f
    of elliptical (circular) section, 280ff

Torsion, of bar
of rectangular section, 283ff, 295ff, 300ff
of bodies of revolution, 352ff
curvilinearly anisotropic, 359ff
homogeneous, 357ff, 375
non-homogeneous, 352ff
of cylinder, 372ff
hollow 308ff
with inclusion (cavity), 363ff
generalized, 263f, 267, 277, 357
problem, 263ff, 357, 359, 363, 367, 369
solution of, 288ff, 354ff, 369ff
pure (simple), 263, 271f, 280ff, 288
stress function in, 273ff
theory of, 352ff
Transformation,
of complex parameters, 51f
of elastic constants, 39ff
of reduced elastic constants, 49f
of stress components, 21ff
Twisting, 91

Uniform compression, 85ff

Virtual work principle, 76, 291
Virtual displacements, 76

Weber's function, 387
Wood,
elastic constants of, 61f
simplified model of, 61

Young's modulus, 30f, 42, 57

TO THE READER

Mir Publishers would be grateful for your comments on the content, translation and design of this book. We would also be pleased to receive any other suggestions you may wish to make.

Our address is:
Mir Publishers
2 Pervy Rizhsky Pereulok,
I-110, GSP, Moscow, 129820
USSR

Printed in the Union of Soviet Socialist Republics