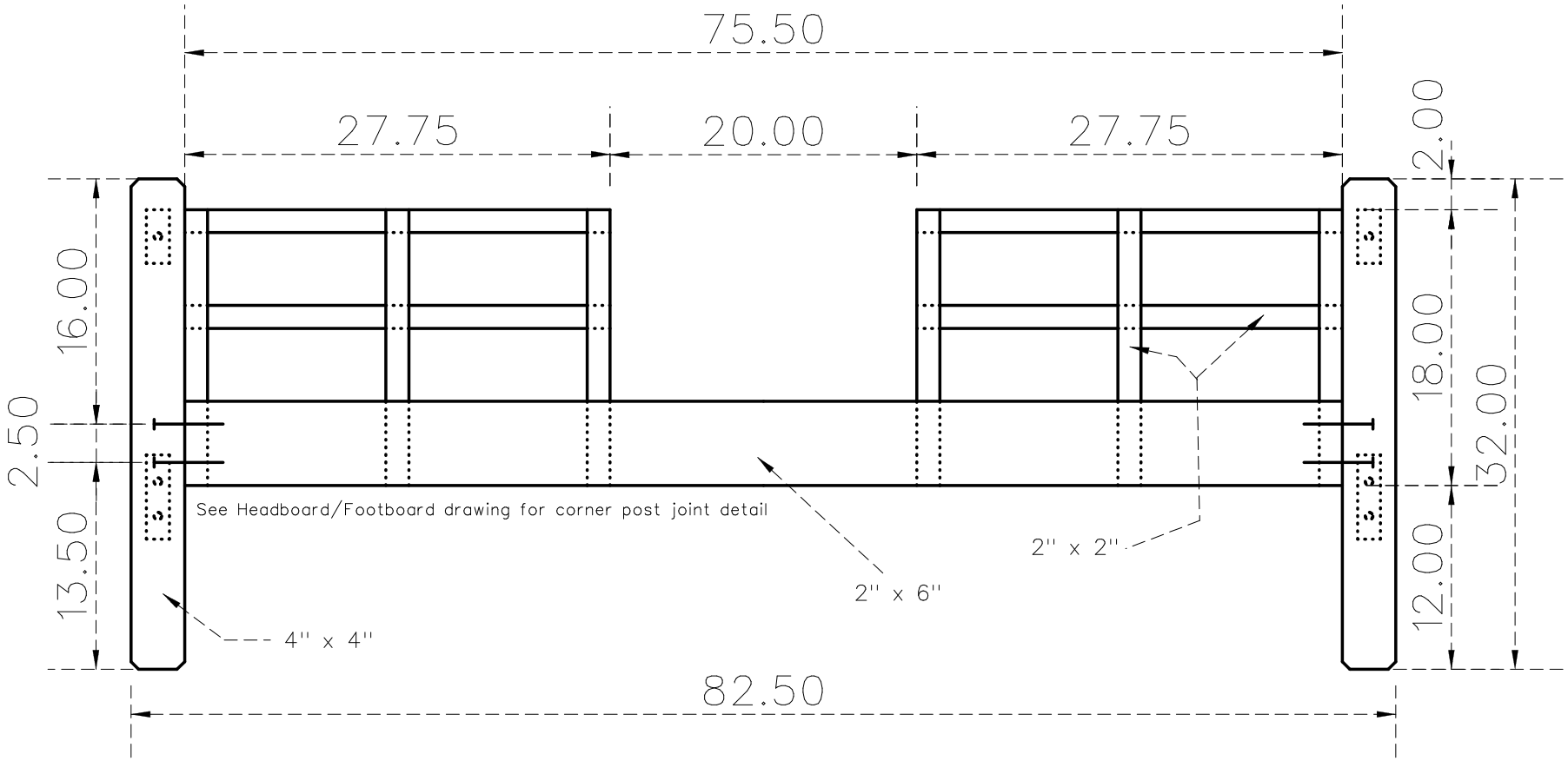

Fasteners: SPAX 0.25" x 4.5" Powerlag Hex Drive Washer Head Lag Screw or Equivalent

wrcsubers Drawn By:	02/12/2021 Date:	Kid's Bed – Front Side Rail Title:	Rev:	Sheet:	Scale: