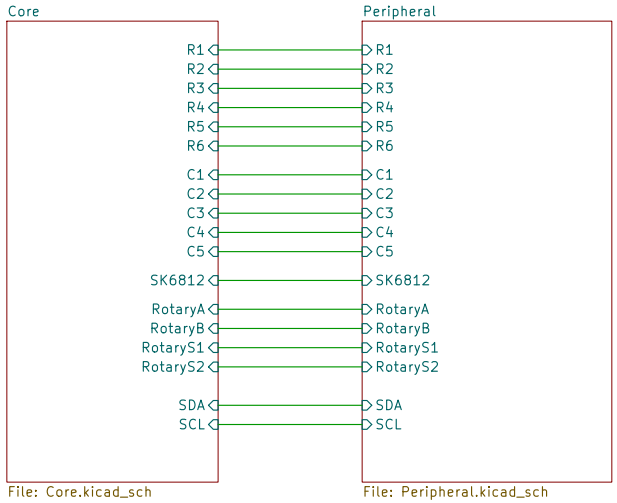

Sheet: /
File: Cafebabe.kicad_sch

Title:

Size: A4	Date:	**Rev:**
KiCad E.D.A. kicad (5.99.0-9526-g5c17ff0595)		Id: 1/3

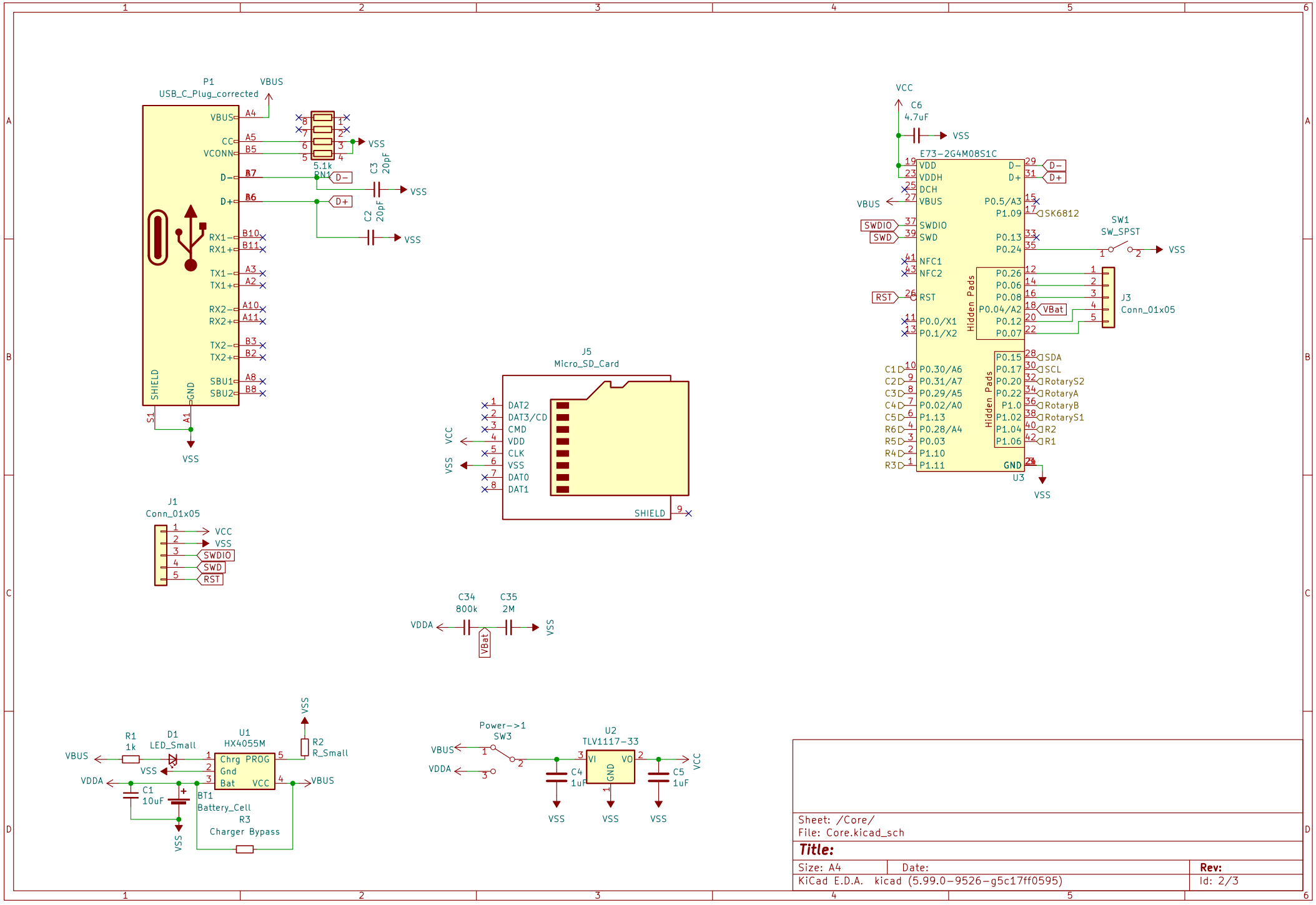

Sheet: /Core/
File: Core.kicad_sch

Title:

Size: A4	Date:	Rev:
KiCad E.D.A. kicad (5.99.0−9526−g5c17ff0595)		Id: 2/3

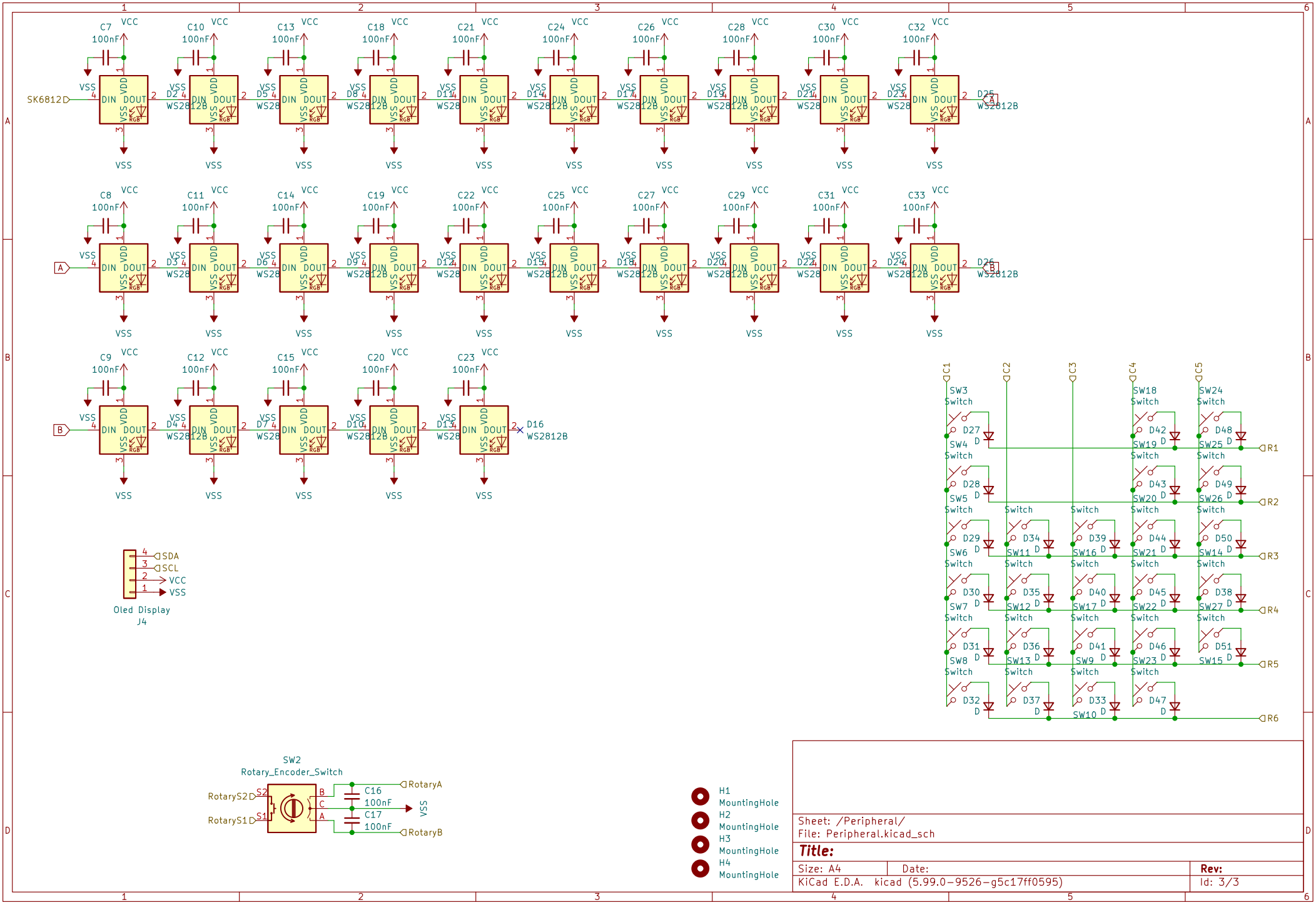

Sheet: /Peripheral/
File: Peripheral.kicad_sch

Title:

Size: A4	Date:	Rev:
KiCad E.D.A. kicad (5.99.0-9526-g5c17ff0595)		Id: 3/3