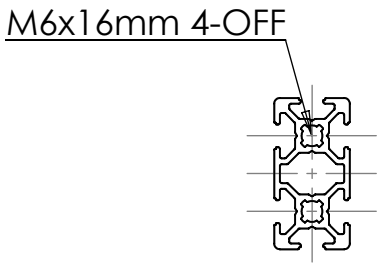

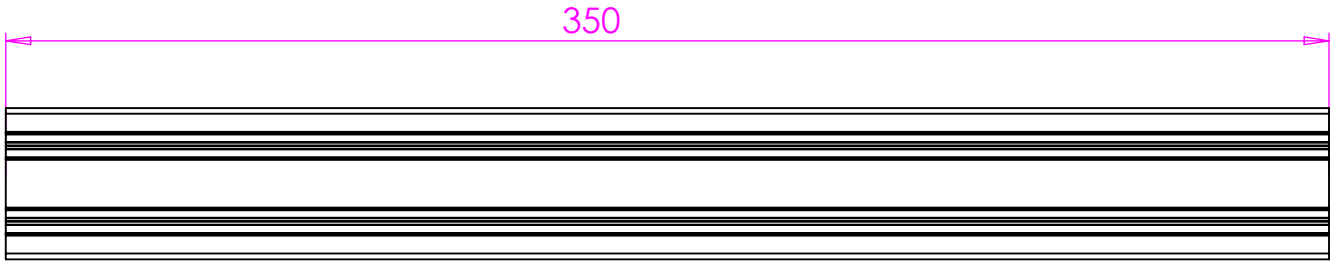

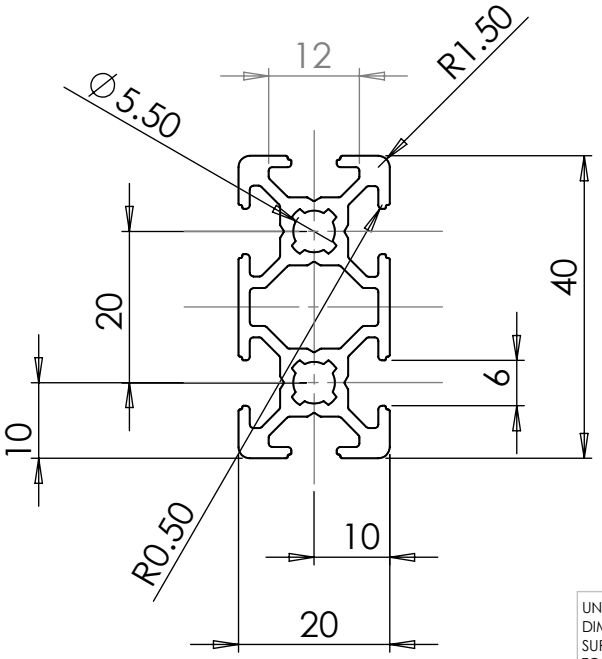

NOTES:
- Aluminium profile as Bosch Rexroth 20x40
- Ends to be free from machining burrs
- Faces hard black anodised (ends optional)

UNLESS OTHERWISE SPECIFIED: DIMENSIONS ARE IN MILLIMETERS SURFACE FINISH: TOLERANCES: LINEAR: ANGULAR:	FINISH:			DEBUR AND BREAK SHARP EDGES	DO NOT SCALE DRAWING	REVISION
	NAME	SIGNATURE	DATE		TITLE: Hardware	
DRAWN						
CHK'D						
APPV'D						
MFG						
Q.A				MATERIAL:	DWG NO. 40x20_extrusion	A4
				WEIGHT:	SCALE:1:2	SHEET 1 OF 1