REVISION HISTORY				
ZONE	REV	DESCRIPTION	DATE	APPROVED
	1	INITIAL REVISION	5/29/2015	A. TRUONG

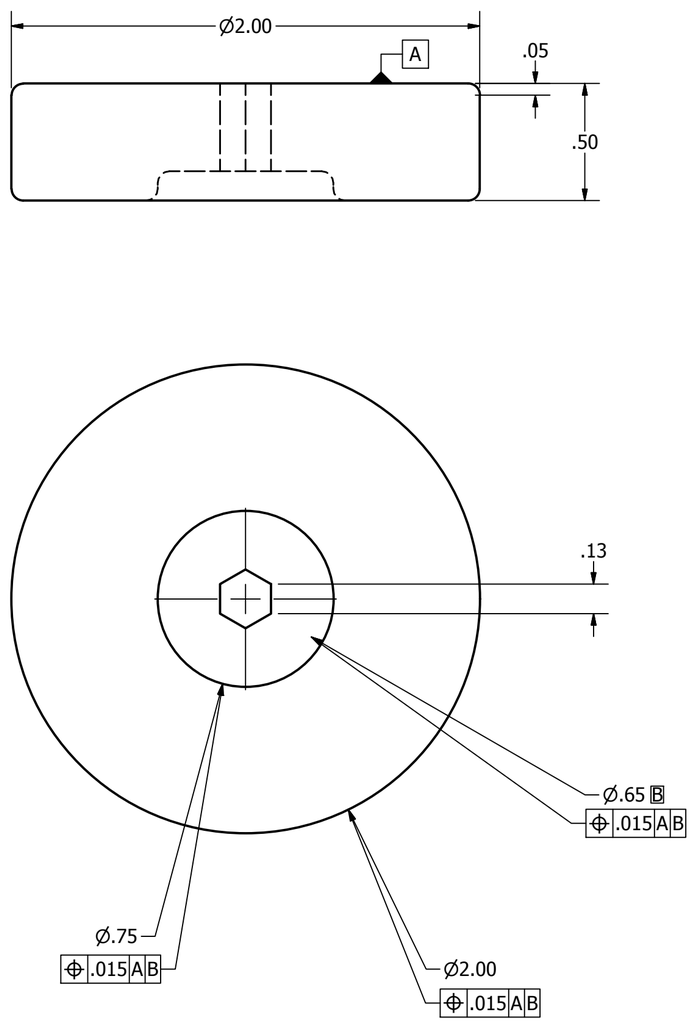

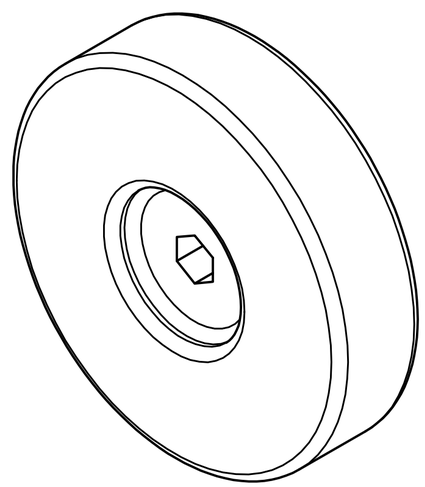

NOTES: UNLESS OTHERWISE SPECIFIED

1. DIMENSIONS READ BY ASME Y14.5-2009 STANDARDS
2. MAKE OUT OF ABS PLASTIC
3. ALL FILLETS ARE R0.05

TABLE
Column 1
.X = +/- .1
.XX = +/- .03
.XXX = +/- .010

ITEM	QTY	PART NUMBER	DESCRIPTION	MATERIAL	STANDARD
1	1	-1	WHEEL	2	

PARTS LIST

DRAWN ANGELINA TRUONG	2015/5/29	THE ASIAN EQUATION
CHECKED WESLEY SOO-HOO	2015/5/29	TITLE
QA		WHEEL
MFG		
APPROVED		

SIZE	DWG NO	REV
C	000104	---

SCALE

SHEET 7 OF 26