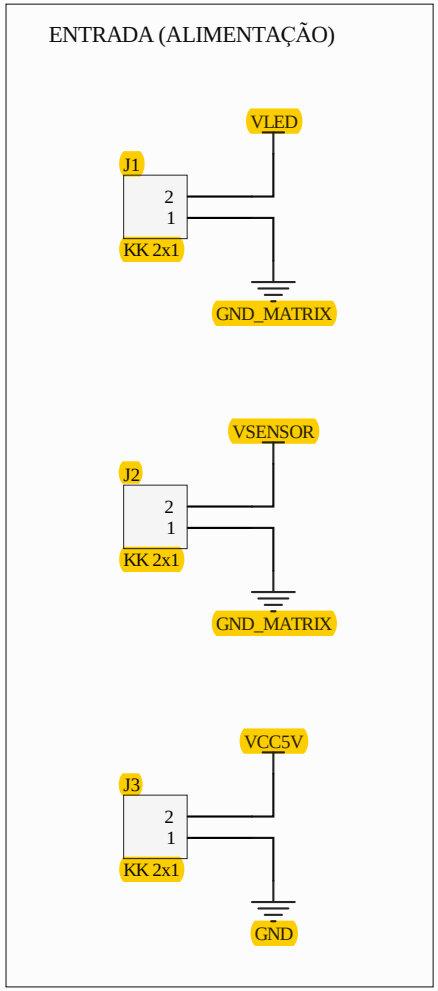

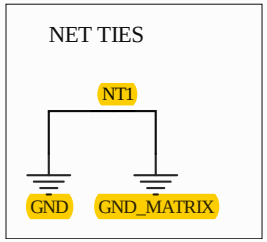

Title	Alimentação	
Size: A	Number	Revision: REV20180903
Date: 9/4/2018		Sheet of
File: C:\Users\..\alimentacao.SchDoc		Drawn By: Wendeurick

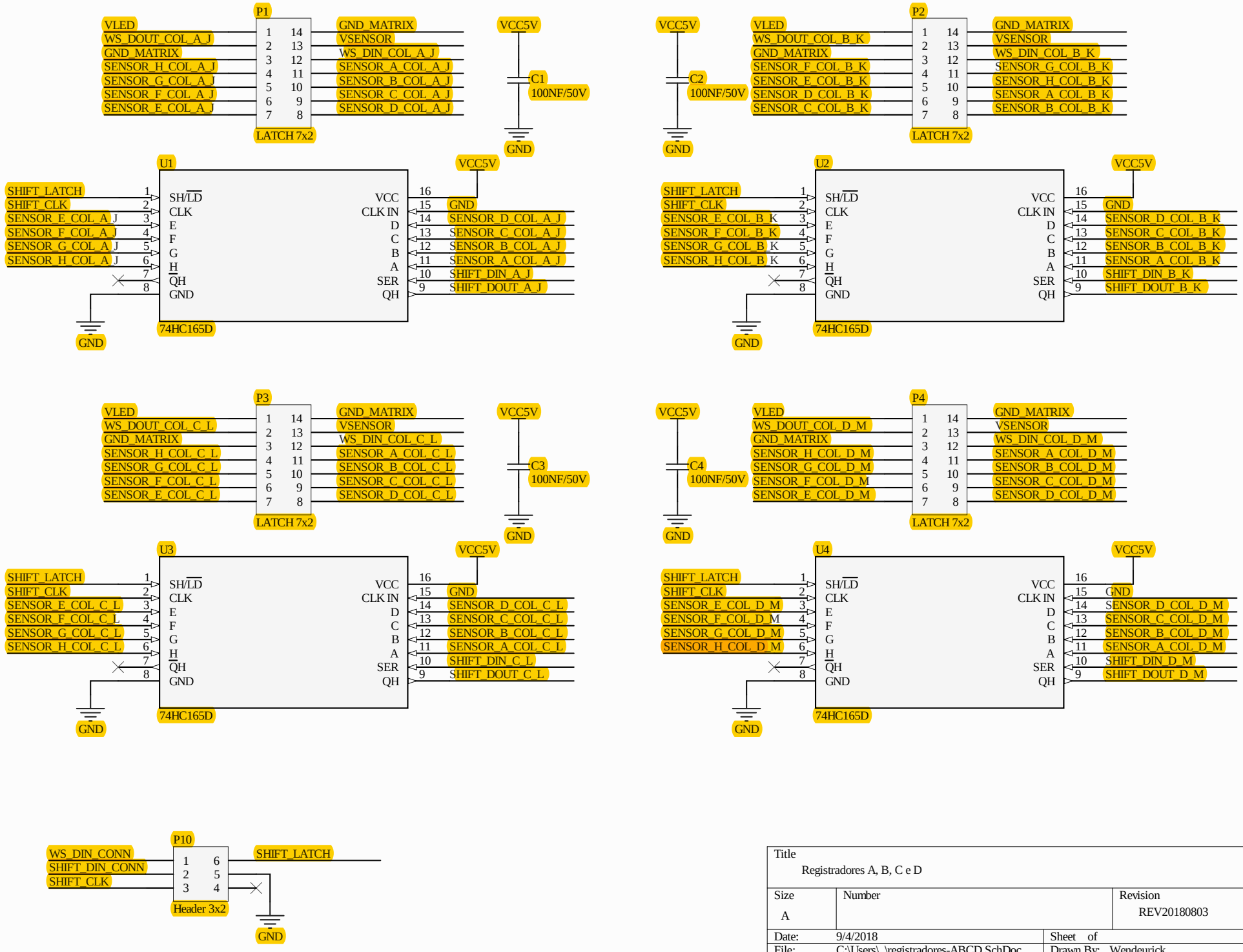

Title: Registradores A, B, C e D		
Size: A	Number	Revision: REV20180803
Date: 9/4/2018		Sheet of
File: C:\Users\..\registradores-ABCD.SchDoc		Drawn By: Wendeurick

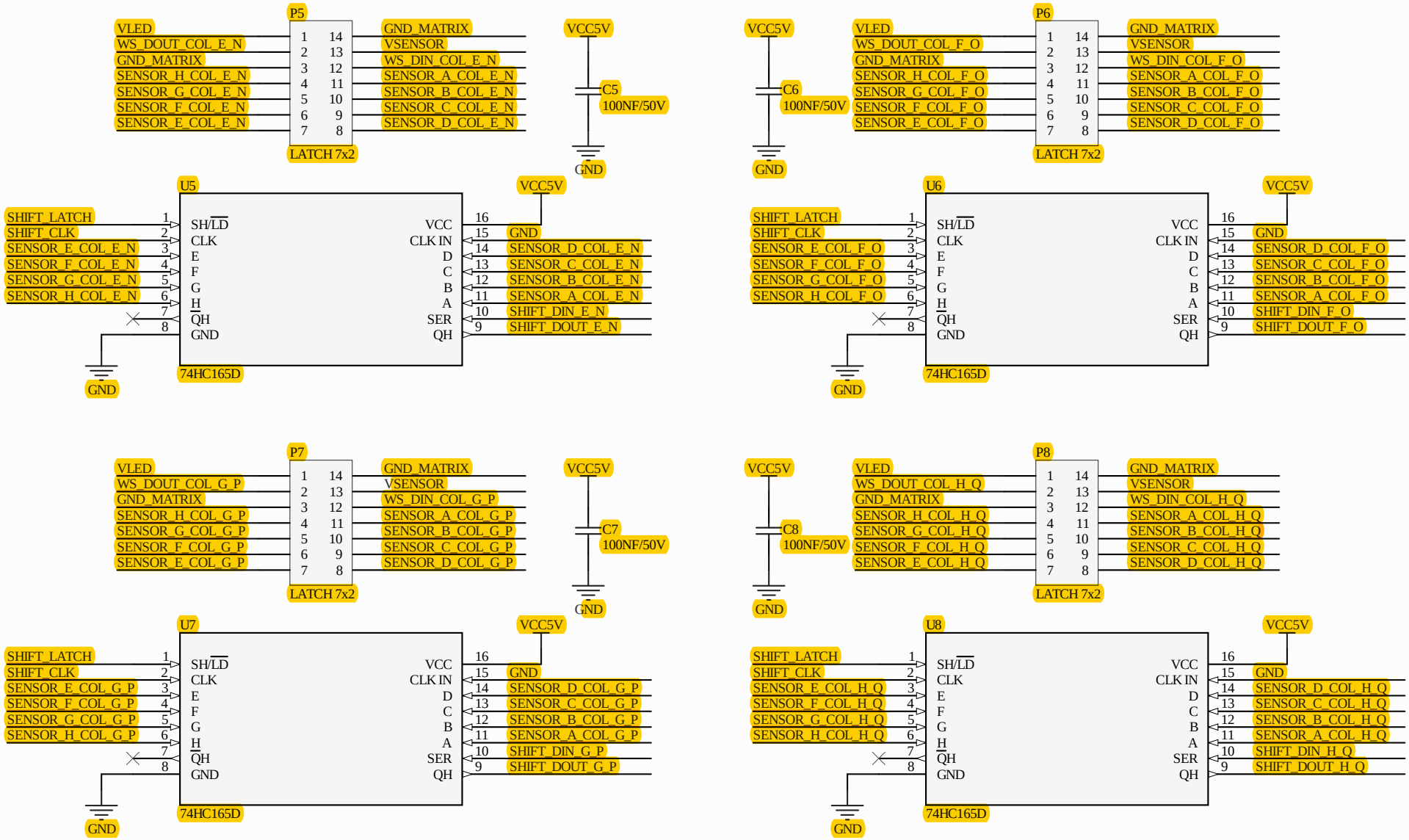

Title: Registradores E, F, G e H		
Size: A	Number	Revision: REV20180903
Date: 9/4/2018		Sheet of
File: C:\Users\..\registradores-EFGH.SchDoc		Drawn By: Wendeurick

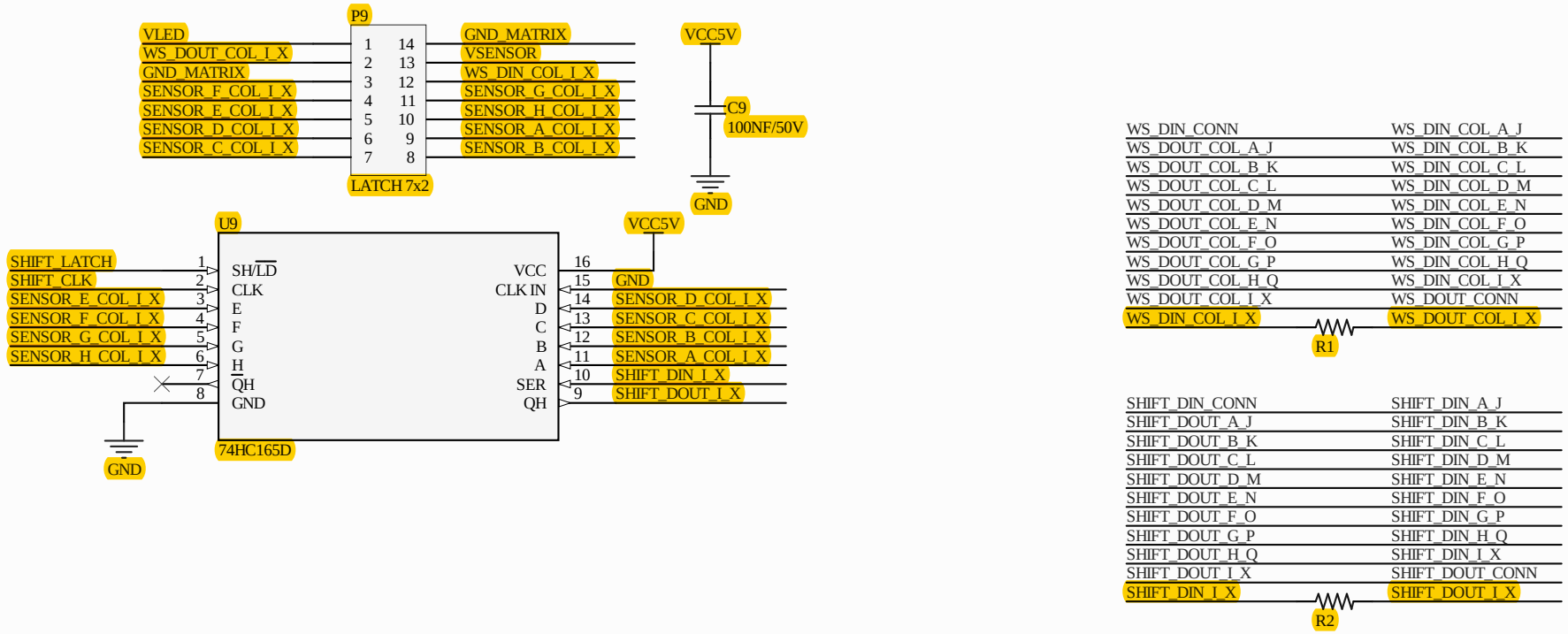

Title: Registradores I		
Size: A	Number	Revision: REV20180903
Date: 9/4/2018		Sheet of
File: C:\Users\..\registradores-I.SchDoc		Drawn By: Wendeurick