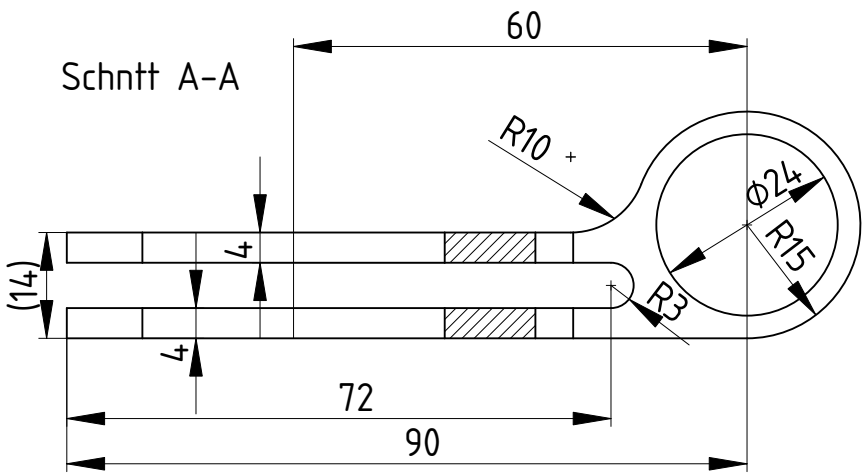

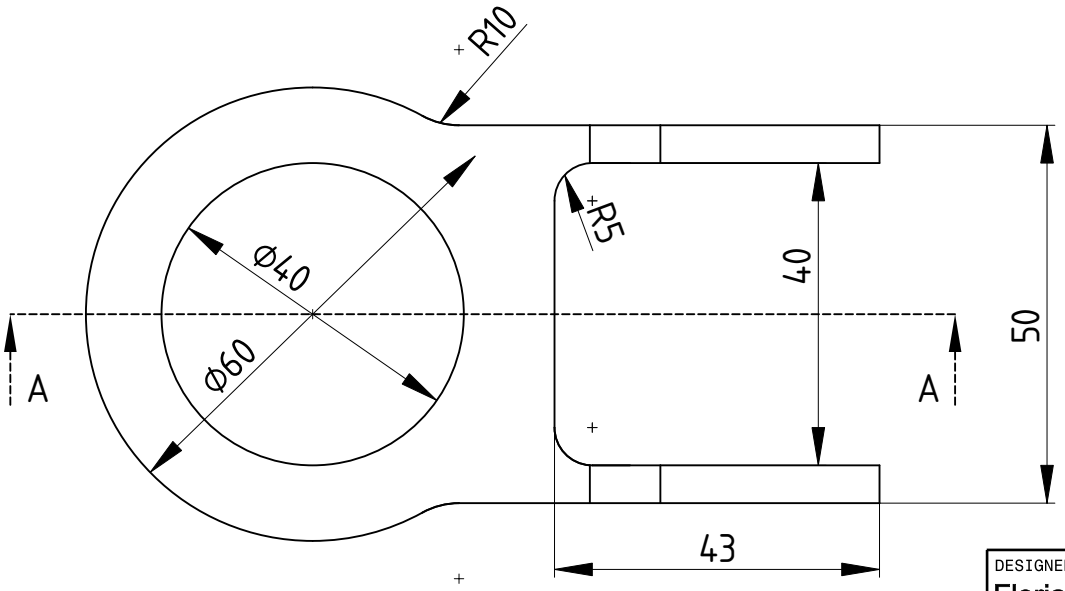

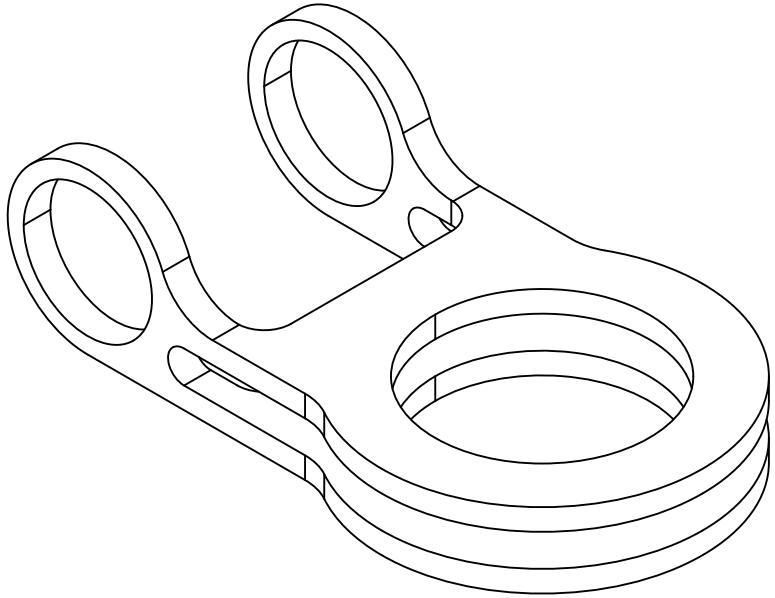

DESIGNED BY: Florian		Übungsaufgabe	
DATE: 2021-01-05		Klemme	
SIZE A4			
SCALE Scale	WEIGHT (kg)	DRAWING NUMBER 47111-2012	SHEET 1

G _
F _
E _
D _
C _
B _
A _

This drawing is our property; it can't be reproduced or communicated without our written consent.

CC BY NC

https://www.youtube.com/flowwiescorner