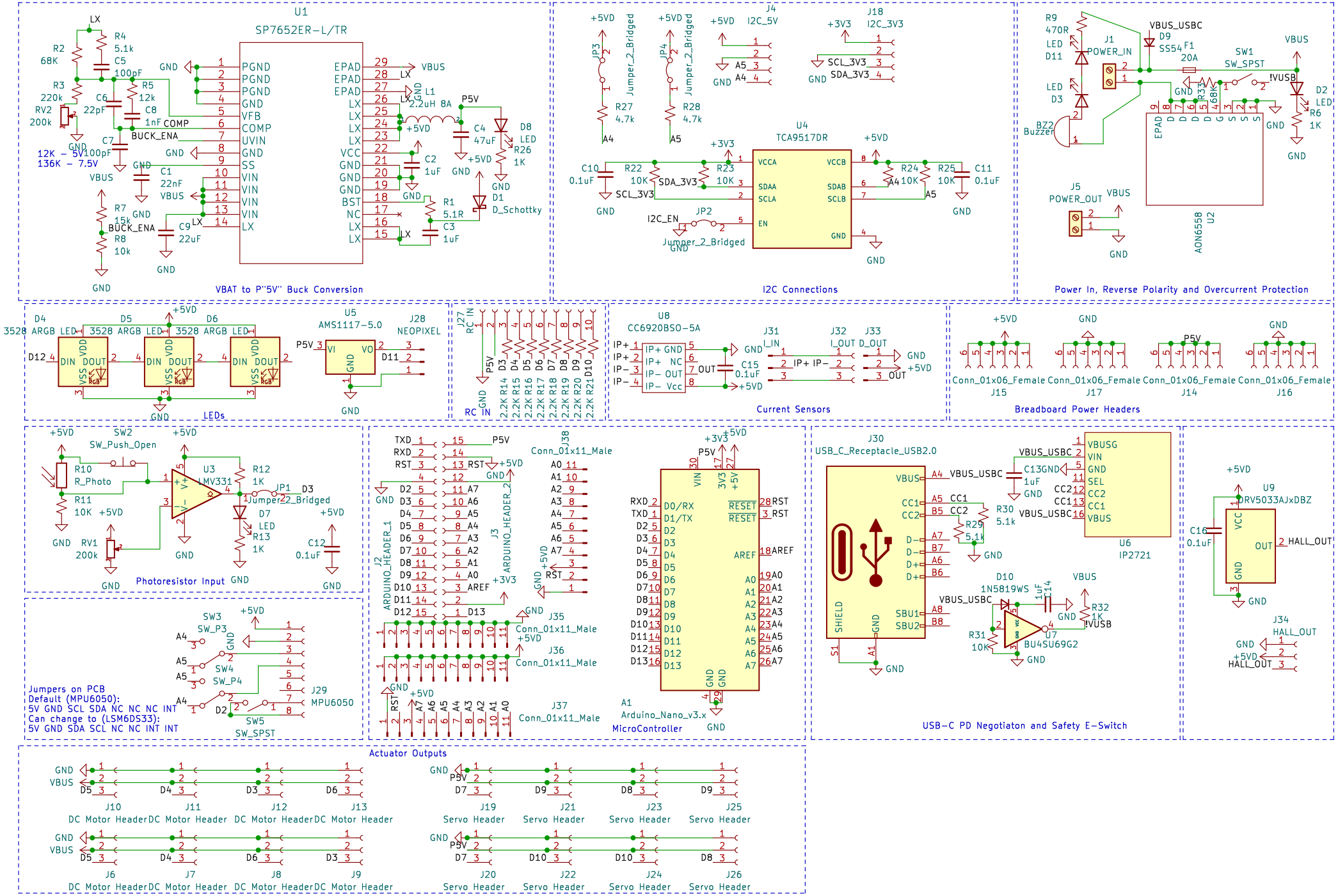
U1
SP7652ER-L/TR
VBAT to P"5V" Buck Conversion
12K - 5V
136K - 7.5V
BUCK_ENA
COMP
VBUS
LX
L1
2.2uH 8A
P5V
D8
LED
R26
1K
D1
D_Schottky
R1
5.1R
C3
1uF
C4
47uF
C2
1uF
C1
22nF
C9
22uF
R7
15k
R8
10k
R2
68K
R3
220k
RV2
200k
R4
5.1k
C5
100pF
C6
22pF
C7
100pF
C8
1nF
R5
12k
J4
I2C_5V
J18
I2C_3V3
JP3
JP4
Jumper_2_Bridged
R27
4.7k
R28
4.7k
U4
TCA9517DR
VCCA
VCCB
SDAA
SDAB
SCLA
SCLB
EN
GND
C10
0.1uF
R22
10K
R23
10K
R24
10K
R25
10K
C11
0.1uF
SDA_3V3
SCL_3V3
I2C_EN
JP2
Jumper_2_Bridged
I2C Connections
R9
470R
LED
D11
LED
D3
BZ2
Buzzer
J1
POWER_IN
VBUS_USBC
D9
SS54
F1
20A
SW1
SW_SPST
!VUSB
R33
68K
D2
LED
R6
1K
J5
POWER_OUT
AON6558
U2
Power In, Reverse Polarity and Overcurrent Protection
D4
3528 ARGB LED
D5
3528 ARGB LED
D6
3528 ARGB LED
D12
DIN
DOUT
VDD
VSS
LEDs
U5
AMS1117-5.0
VI
VO
P5V_3
J28
NEOPIXEL
D11
J27
RC IN
R14
R15
R16
R17
R18
R19
R20
R21
U8
CC6920BSO-5A
IP+ GND
IP+ NC
IP- OUT
IP- Vcc
OUT
C15
0.1uF
J31
I_IN
J32
I_OUT
J33
D_OUT
Current Sensors
Conn_01x06_Female
J15
J17
J14
J16
Breadboard Power Headers
SW2
SW_Push_Open
R10
R_Photo
R11
10K
RV1
200k
U3
MV331
R12
1K
JP1
Jumper_2_Bridged
D3
D7
LED
R13
1K
C12
0.1uF
Photoresistor Input
J38
Conn_01x11_Male
J35
Conn_01x11_Male
J36
Conn_01x11_Male
J37
Conn_01x11_Male
J2
ARDUINO_HEADER_1
J3
ARDUINO_HEADER_2
A1
Arduino_Nano_v3.x
MicroController
D0/RX
D1/TX
RESET
AREF
VIN
3V3
+5V
SW3
SW_P3
SW4
SW_P4
SW5
SW_SPST
J29
MPU6050
Jumpers on PCB
Default (MPU6050):
5V GND SCL SDA NC NC NC INT
Can change to (LSM6DS33):
5V GND SDA SCL NC NC INT INT
J30
USB_C_Receptacle_USB2.0
VBUS
CC1
CC2
D-
D+
SHIELD
SBU1
SBU2
C13
1uF
R30
5.1k
R29
5.1k
U6
IP2721
VBUSG
VIN
GND
SEL
CC2
CC1
VBUS
D10
1N5819WS
C14
1uF
R31
10K
U7
BU4SU69G2
R32
1K
!VUSB
USB-C PD Negotiaton and Safety E-Switch
U9
DRV5033AJxDBZ
VCC
OUT
GND
C16
0.1uF
HALL_OUT
J34
HALL_OUT
Actuator Outputs
J10
DC Motor Header
J11
DC Motor Header
J12
DC Motor Header
J13
DC Motor Header
J19
Servo Header
J21
Servo Header
J23
Servo Header
J25
Servo Header
J6
DC Motor Header
J7
DC Motor Header
J8
DC Motor Header
J9
DC Motor Header
J20
Servo Header
J22
Servo Header
J24
Servo Header
J26
Servo Header