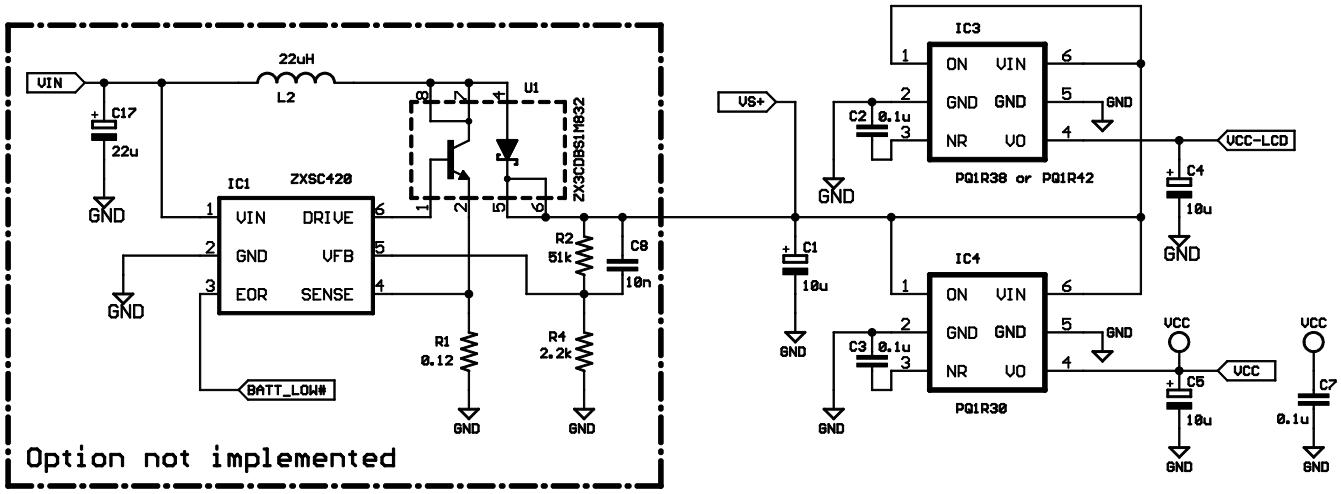

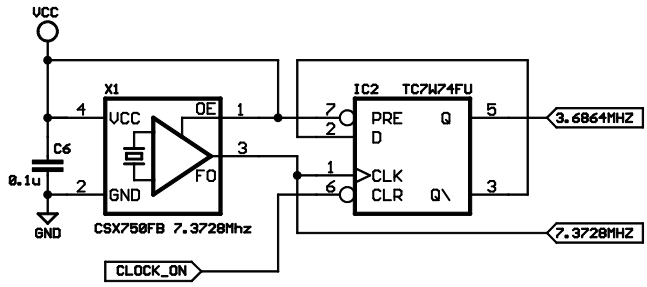

AVCX Power Supply & Clock Generator	
TITLE: Color TFT LCD Controller	
Document Number: Project A3810	REV:
Date: 6/30/2004 08:03:26p	Sheet: 2/2