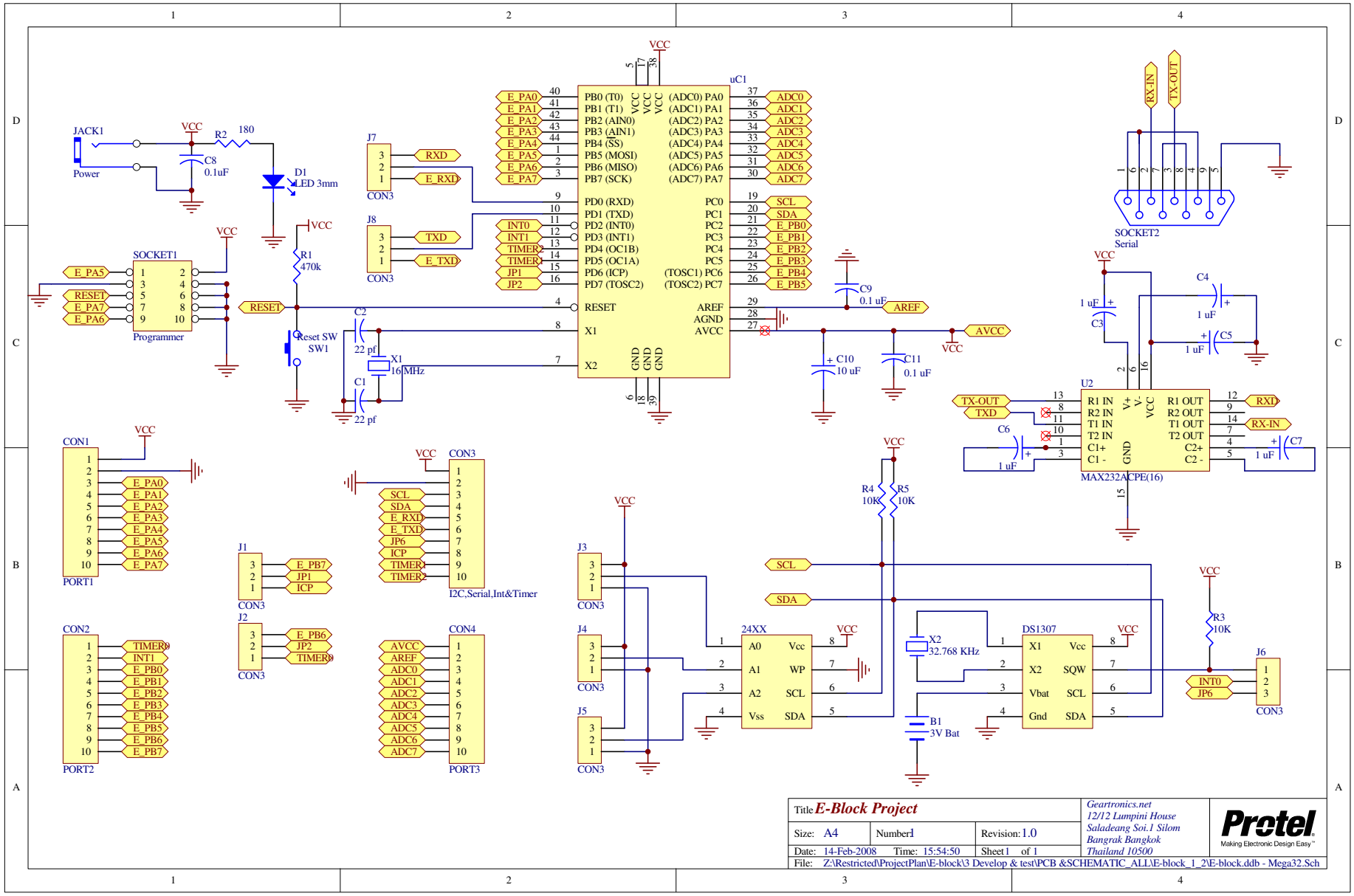

Title *E-Block Project*			*Geartronics.net* *12/12 Lumpini House* *Saladeang Soi.1 Silom* *Bangrak Bangkok* *Thailand 10500*
Size: A4	Number 1	Revision: 1.0	
Date: 14-Feb-2008	Time: 15:54:50	Sheet 1 of 1	
File: Z:\Restricted\ProjectPlan\E-block\3 Develop & test\PCB &SCHEMATIC_ALL\E-block_1_2\E-block.ddb - Mega32.Sch			

Protel Making Electronic Design Easy™