Morpho connector to STM32 Nucleo Board

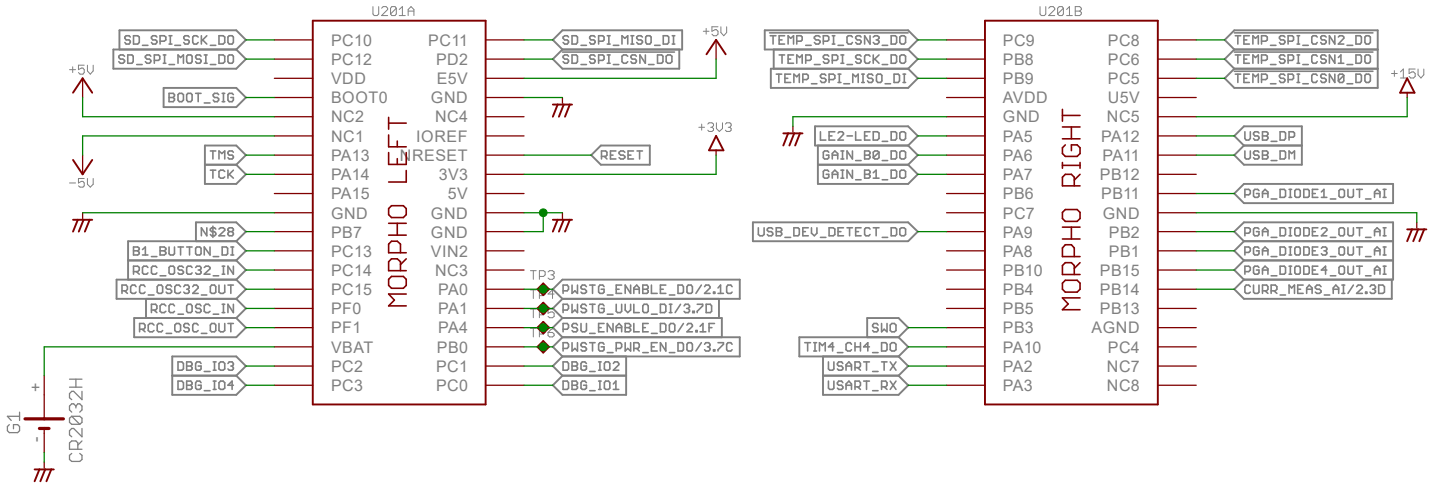

Analog Power Supply for the whole system

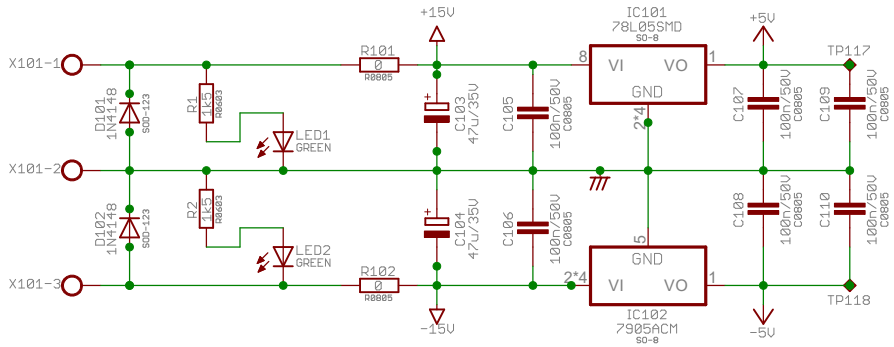

BY NC SA

uTTA_V2.2_Power	
Version: 2.5.3	
22.11.2025 13:20:51	
Sheet: 1/3	

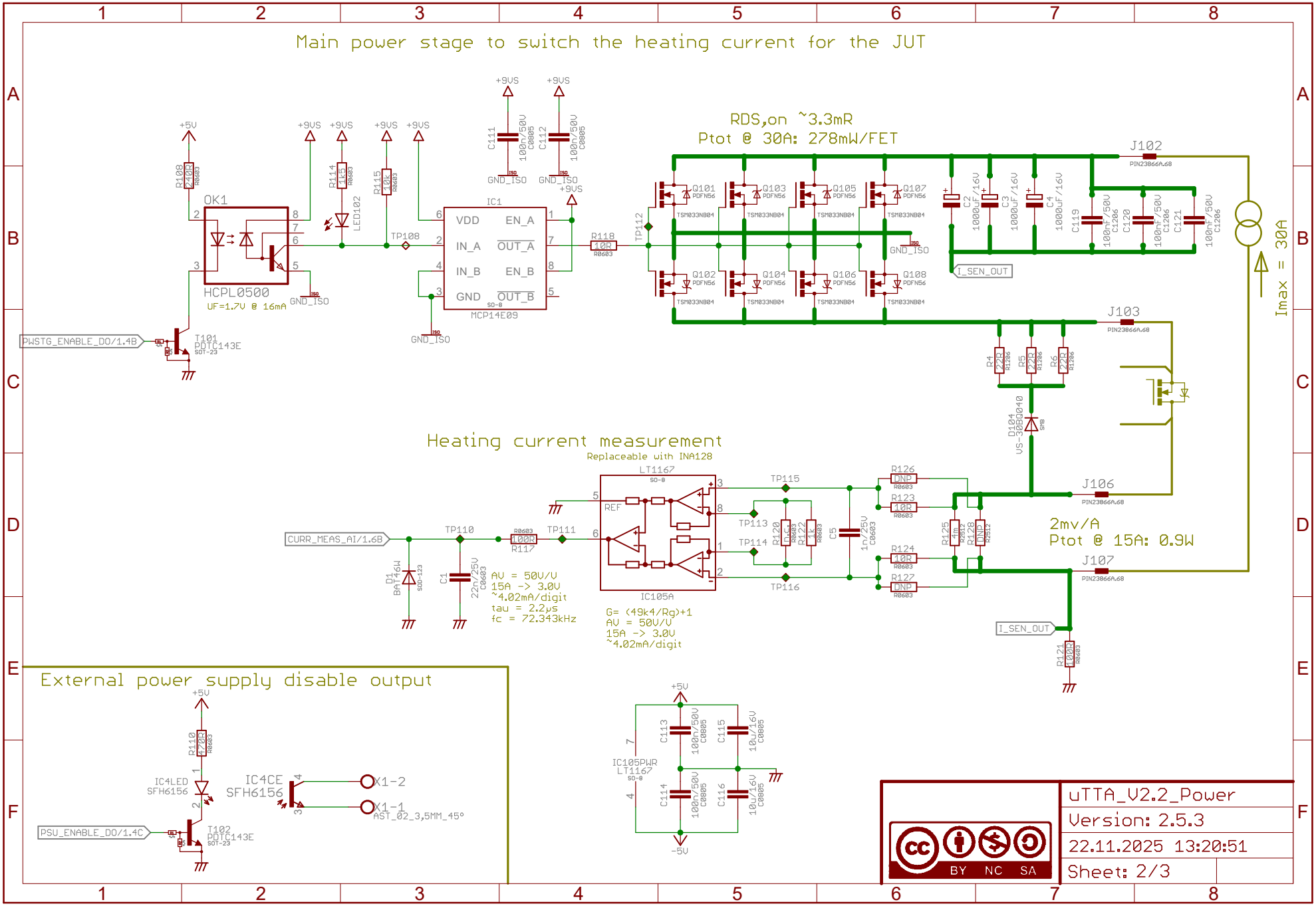
Main power stage to switch the heating current for the JUT
RDS,on ~3.3mR
Ptot @ 30A: 278mW/FET
Imax = 30A
OK1
HCPL0500
UF=1.7V @ 16mA
IC1
MCP14E09
VDD
EN_A
IN_A
OUT_A
IN_B
EN_B
GND
OUT_B
PWSTG_ENABLE_DO/1.4B
T101
PDTC143E
GND_ISO
I_SEN_OUT
J102
J103
J106
J107
Heating current measurement
Replaceable with INA128
LT1167
IC105A
CURR_MEAS_AI/1.6B
AV = 50V/V
15A -> 3.0V
~4.02mA/digit
tau = 2.2µs
fc = 72.343kHz
G= (49k4/Rg)+1
AV = 50V/V
15A -> 3.0V
~4.02mA/digit
2mv/A
Ptot @ 15A: 0.9W
External power supply disable output
IC4LED
SFH6156
IC4CE
SFH6156
X1-2
X1-1
AST_02_3,5MM_45°
PSU_ENABLE_DO/1.4C
T102
PDTC143E
IC105PWR
LT1167
uTTA_V2.2_Power
Version: 2.5.3
22.11.2025 13:20:51
Sheet: 2/3
BY NC SA

Isolated power supply circuit for the gate driver

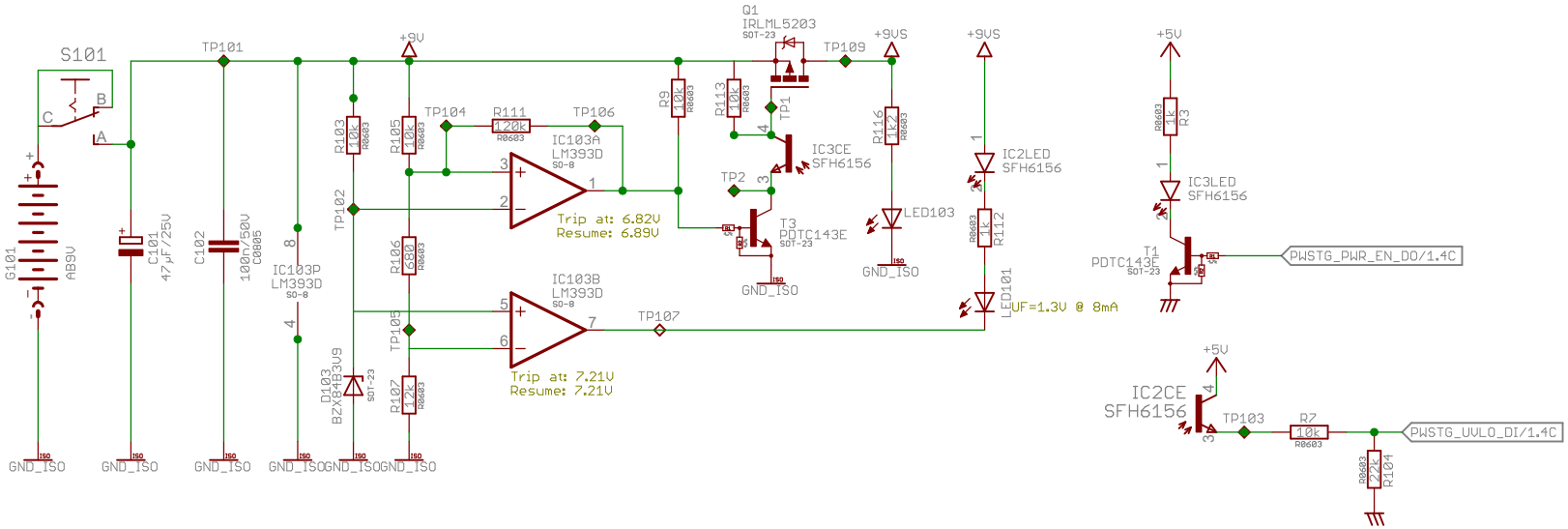

uTTA_V2.2_Power	
Version: 2.5.3	
22.11.2025 13:20:51	
Sheet: 3/3	

BY NC SA