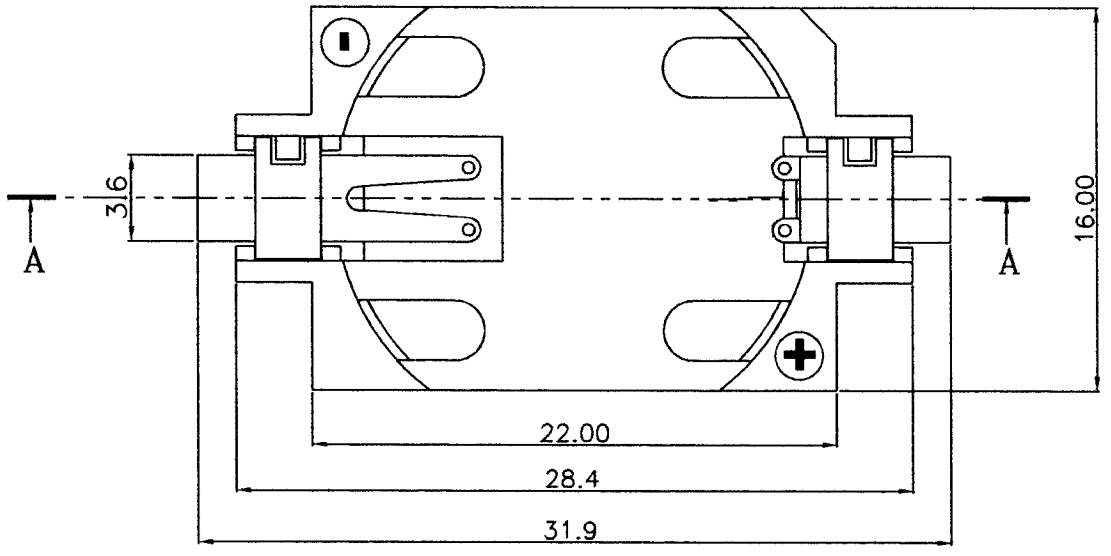

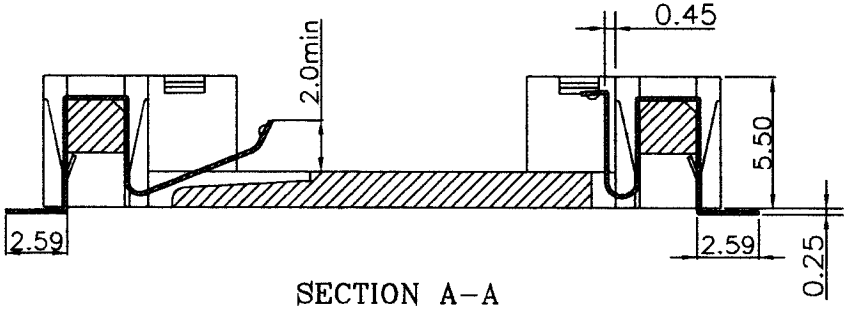

SECTION A–A

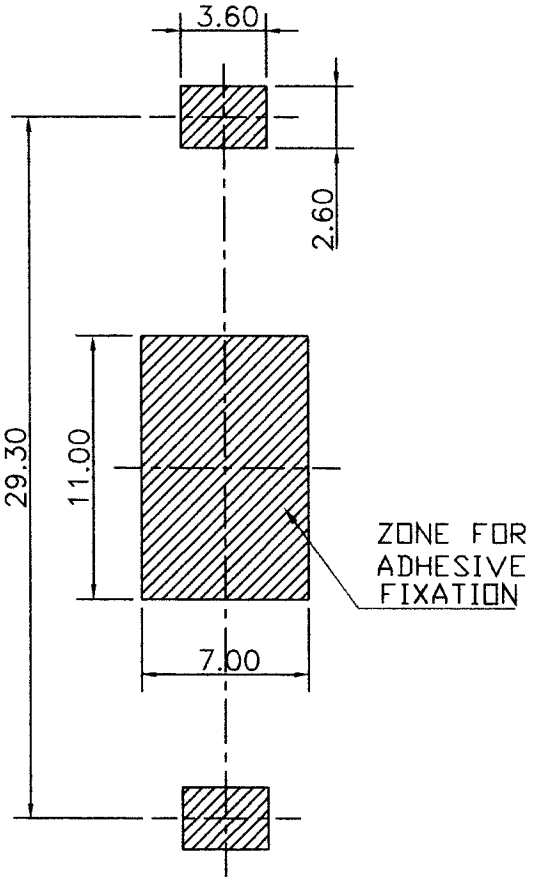

PCB LAYOUT

NOTES

1.MATERIAL: HOUSING-LCP 30%GF UL94V-0 WHITE COLOR
CONTACTS-PHOSPHORBRONZE C5191R-H

2.PLATING: GOLD 1u MIN OVER Ni 5u MIN LEAD FREE

3.REFLOW TEMP.: 260 °C PURE TIN

4.RoHS COMPLIANT

NO.		DATE
3		
2		
1		

General Tolerances:
Angel: +/-3°
Dim: 0.0 +/- 0.30
0.00 +/- 0.20
0.000 +/- 0.10

NAME			
SCALE	3 : 1	APPD.	WILLIAM YEN
UNIT	MM	CHKD.	KATY WU
MAT'L	AS NOTES	DWN.	W.C.C.
DATE	JAN.05,2006	DR NO.	CH28-2032LF/G-0106

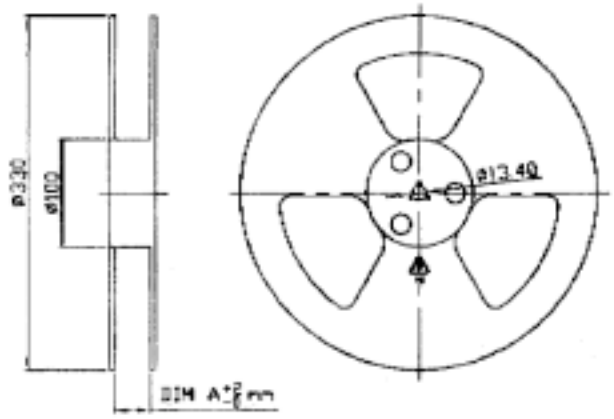

PACKAGING REEL (S1:10)

NOTE:
1.MATERIAL:PLASTIC REEL
2.ALL DIMENSIONS MEET EIA-418-3 REQUIREMENTS.
3.COMPONENT LOAD PER 13"REEL: 500 PCS.
4.P/N: SEE TABLE 1 & TABLE 2

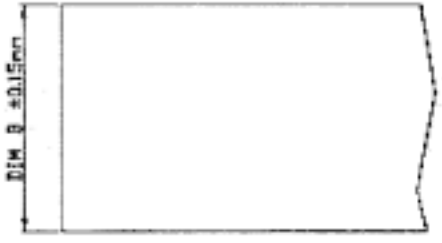

TOP COVER

NOTE:
1.COVER CAMBER IS WITHIN 1mm in 100mm.
2.MATERIAL:TRANSPARENT POLYSTYRENE ALLOY (UP-5000)100% RECYCLABLE.
3.ALL DIMENSIONS MEET EIA-418-3 REQUIREMENTS.
4.COVER THICKNESS:0.053±0.005mm.
5.COVER PACKING LENGTH PER per 22" REEL:200 METERS.
6.P/N: SEE TABLE 1 & TABLE 2

TABLE 1

NO.	PACKAGING REEL P/N	DIM A	CARRIER WIDTH	REMARK
1	7-OT-001-XX	8.4	8 mm	13" PLASTIC REEL
2	7-OT-002-XX	12.4	12 mm	13" PLASTIC REEL
3	7-OT-003-XX	16.4	16 mm	13" PLASTIC REEL
4	7-OT-004-XX	24.4	24 mm	13" PLASTIC REEL
5	7-OT-005-XX	32.4	32 mm	13" PLASTIC REEL
6	7-OT-006-XX	44.4	44 mm	13" PLASTIC REEL
7	7-OT-007-XX	56.4	56 mm	13" PLASTIC REEL
8	7-OT-008-XX	72.4	72 mm	13" PLASTIC REEL
9	7-OT-009-XX	88.4	88 mm	13" PLASTIC REEL
10	7-OT-010-XX	104.4	104 mm	13" PLASTIC REEL
11	7-OT-011-XX	120.4	120 mm	13" PLASTIC REEL

TABLE 2

NO.	TOP COVER P/N	DIM B	CARRIER WIDTH	REMARK
1	7-OT-012-XX	5.3	8 mm	ADHESIVE COVER
2	7-OT-013-XX	9.3	12 mm	ADHESIVE COVER
3	7-OT-014-XX	13.3	16 mm	ADHESIVE COVER
4	7-OT-015-XX	21.3	24 mm	ADHESIVE COVER
5	7-OT-016-XX	25.5	32 mm	ADHESIVE COVER
6	7-OT-017-XX	37.5	44 mm	ADHESIVE COVER
7	7-OT-018-XX	49.5	56 mm	ADHESIVE COVER
8	7-OT-019-XX	65.4	72 mm	ADHESIVE COVER
9	7-OT-020-XX	81.4	88 mm	ADHESIVE COVER
10	7-OT-021-XX	97.4	104 mm	ADHESIVE COVER
11	7-OT-022-XX	113.4	120 mm	ADHESIVE COVER

B	RC-2003-029	04/10/00	
A	RELEASE	04/30/99	

ENGINEERING DRAWING

Date 04/30/99 Sheet 2 of 2
7-OT-XXX-XX
BATTERY BOX
EMBOSSED TAPE
Scale 4 : 3

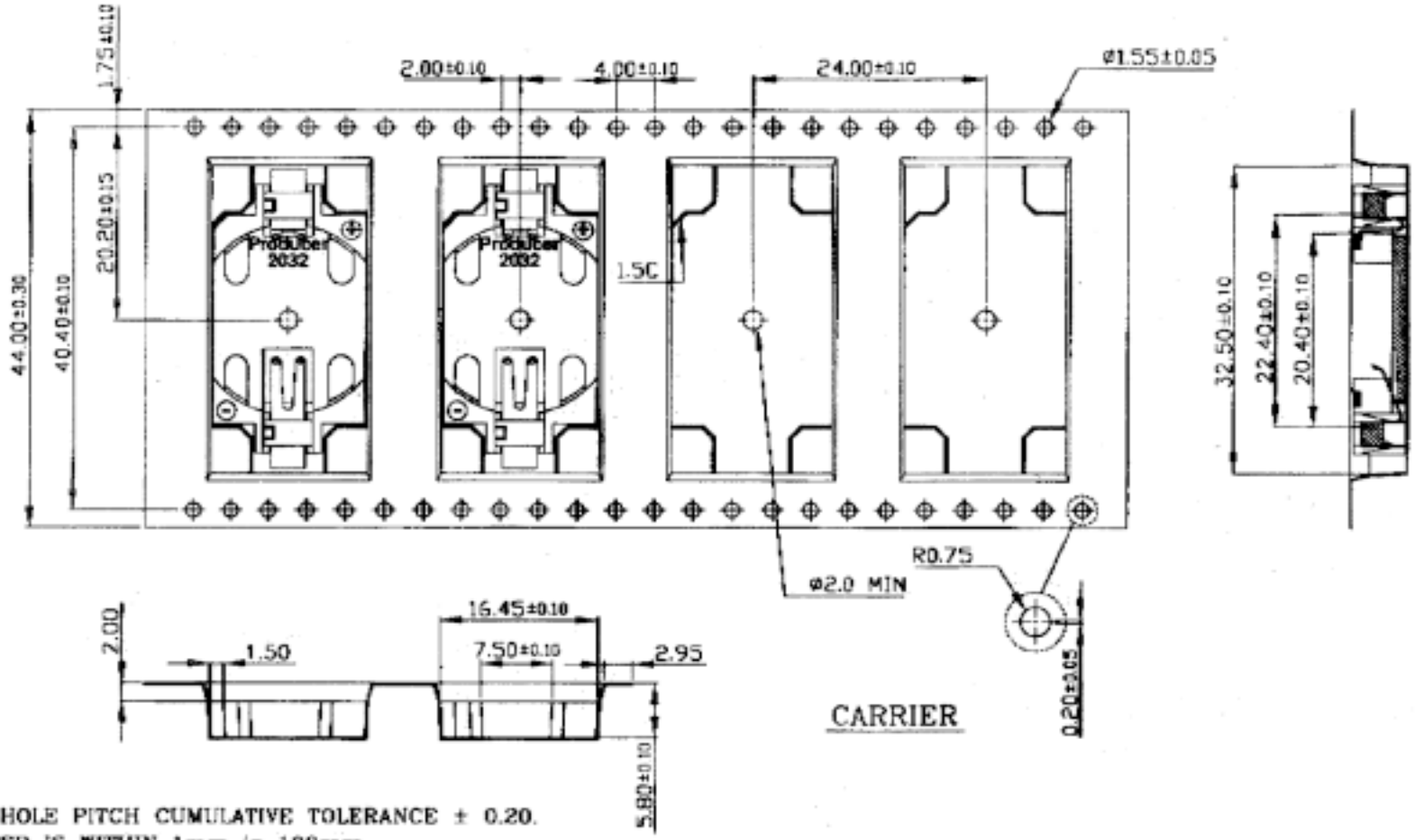

NOTE:

1.10 SPROCKET HOLE PITCH CUMULATIVE TOLERANCE ± 0.20.
2.CARRIER CAMBER IS WITHIN 1mm in 100mm.
3.MATERIAL:BLACK COMDUCTIVE POLYSTYRENE ALLOY (UP-5000)100% RECYCLABLE.
4.ALL DIMENSIONS MEET EIA-418-3 REQUIREMENTS.
5.THICKNESS:0.36±0.05mm.
6.PACKING LENGTH PER per 22" REEL:39.5 METERS.
7.COMPONENT LOAD PER 13"REEL: 500 PCS.
8.PEEL FORCE (300mm/min): 8mm: 30~100g
12~56mm: 30~100g
9.P/N:
7-RL-019-00

NO.	CARRIER P/N	CONNECTOR P/N	REMARK
1	7-RL-019-XX		44 mm WIDTH

B	RC-2000-029	04/10/00	ENGINEERING DRAWING	UNIT: mm
A	RELEASE	04/30/99		
REV	Revision Record	Date	Drawn by	Chk'd by
	Revision Only On Cad System		App'd by	Scale 4 : 3

Date 04/30/99 Sheet 1 OF 2
Dwg No. 7-RL-019-00 REV B
Title BATTERY HOLDER EMBOSSED TAPE PACKAGING

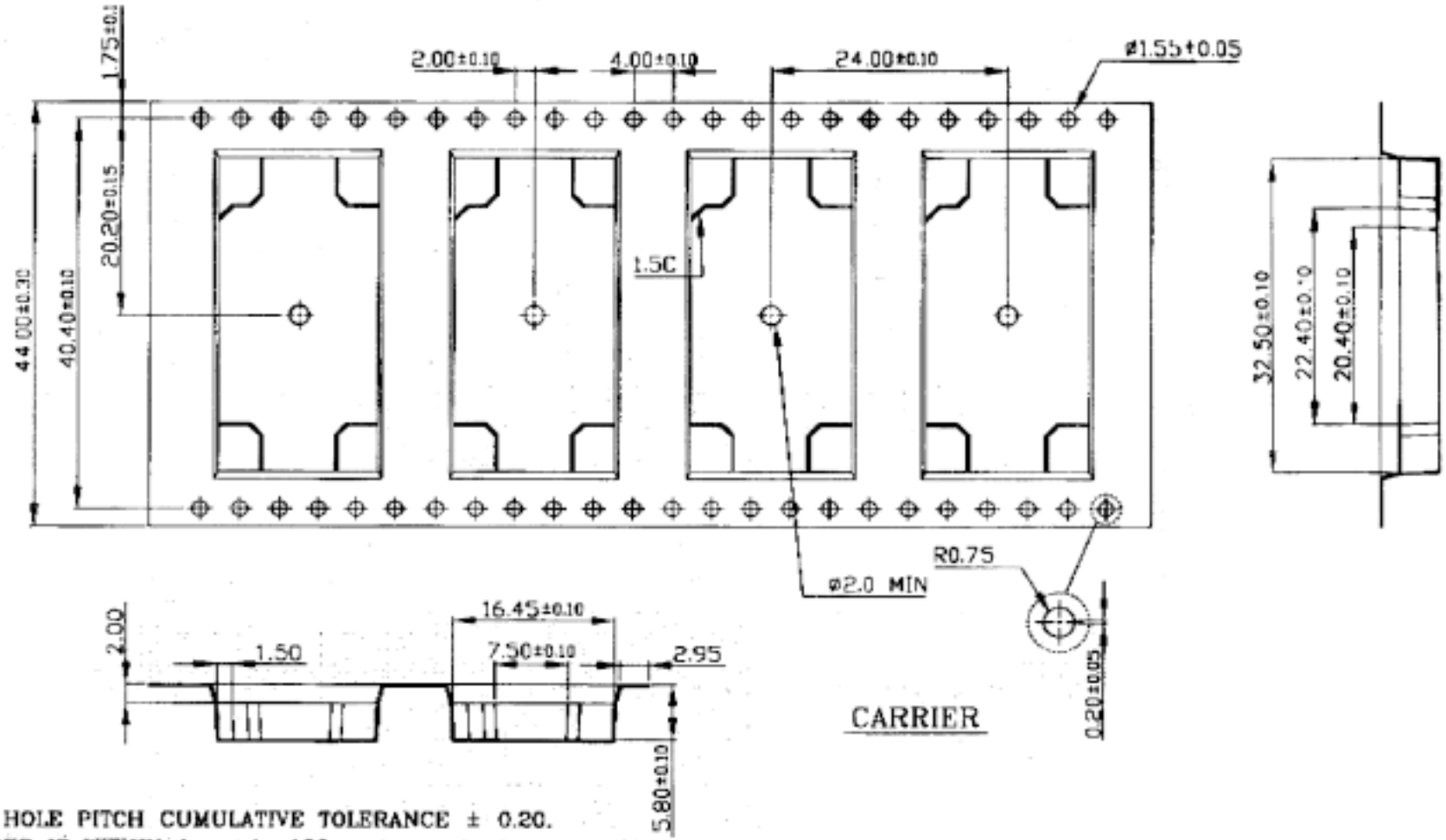

NOTE:

1.10 SPROCKET HOLE PITCH CUMULATIVE TOLERANCE ± 0.20.
2.CARRIER CAMBER IS WITHIN 1mm in 100mm.
3.MATERIAL:BLACK COMDUCTIVE POLYSTYRENE ALLOY (UP-5000)100% RECYCLABLE.
4.ALL DIMENSIONS MEET EIA-418-3 REQUIREMENTS.
5.THICKNESS:0.36±0.05mm.
6.PACKING LENGTH PER per 22" REEL:38.5 METERS.
7.COMPONENT LOAD PER 13"REEL: 500 PCS.
8.PEEL FORCE (300mm/min): 8mm: 30~100g
12~56mm: 30~100g
9.P/N:
7-RL-019-00

NO.	CARRIER P/N	CONNECTOR P/N	REMARK
1	7-RL-019-XX		44 mm WIDTH

B	RC-2000-029	04/10/00	ENGINEERING DRAWING	UNIT: mm
A	RELEASE	04/30/99	General Tolerances Angle ±3° Dim 0.0 ±0.25 0.00 ±0.13 0.000 ±0.05	Date 04/30/99 Sheet 1 OF 2
REV	Revision Record	Date	Drawn by / Checked by	Dwg NO 7-RL-019-00 REV B
	Revise Only In Cad System		Approved by / Scale 4 : 3	Title BATTERY HOLDER EMBOSSED TAPE PACKAGING