EBU6408 Sensors and Radio Frequency Identification (RFID)

Lecture 1: RFID Introduction and Overview

Dr Fatma Benkhelifa

PhD, Lecturer (Assistant Professor), SIEEE, Editor of IEEE Communications Letters

e-mail: *f.benkhelifa@qmul.ac.uk*

website: *Fatma Benkhelifa - EECS (qmul.ac.uk)*

Queen Mary
University of London

Textbooks

Klaus Finkenzeller, "RFID Handbook", Wiley, Third Edition, 2010.

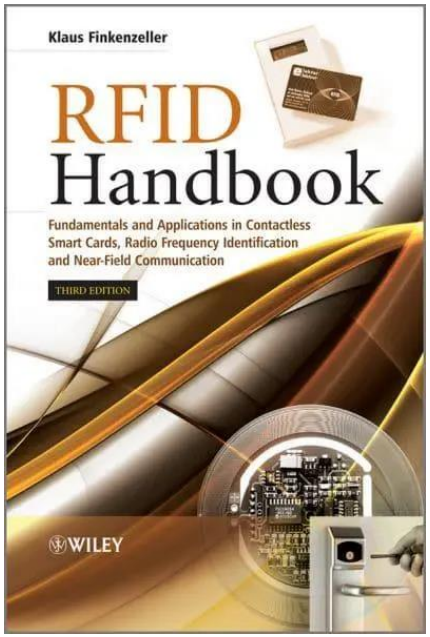

PDF File

Bill Glover and Himanshu Bhatt, "RFID Essentials", O'Reilly Media Inc, 2006.

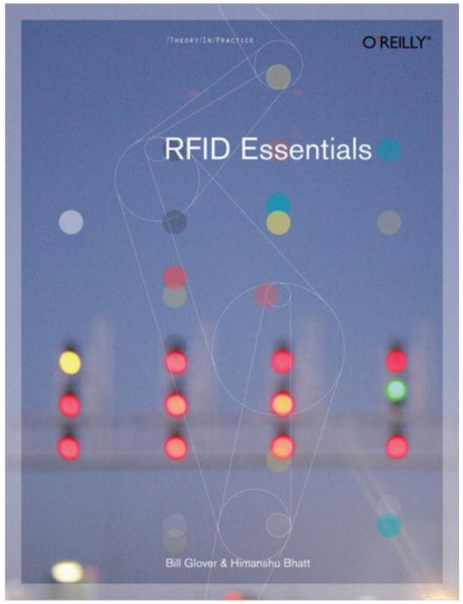

QMUL Library link

Harvey Lehpamer, "RFID Design Principles", Artech House, 2012.

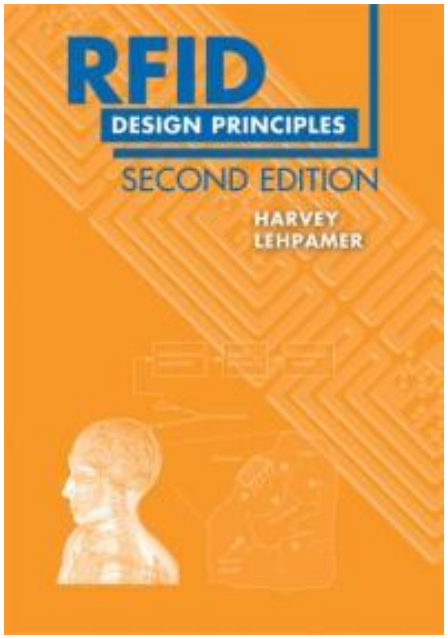

QMUL Library link

Module Aims

- **Aim 1:** Provide students with a comprehensive understanding of basic RFID technological aspects including system components, wireless communication principles, and applications.
- **Aim 2:** Equip students with analytical skills through analysis of standardization/normalization and security of RFID systems.
- **Aim 3:** Develop students' ability to design RFID systems by exploring design and testing methodologies and metrics.
- **Aim 4:** Develop students' critical analysis and evaluation skills by exploring and analyzing new RFID developments trends through research papers.
- **Aim 5:** Develop students' practical skills by designing real IoT projects using RFID tags/reader and microcontrollers (e.g. Arduino) and developing programming codes on RFID (e.g. Arduino IDE).

Evaluation Rules???

- **Two class tests:**
  - **Test 1:** Covering the material delivered in the first half o module **(5%)**
  - **Test 2:** covering the material delivered in the second half of module **(10%)**
  - **Allowed: : Handwriting** double-faced A4-sized cheating sheet
- **Coursework:** Work in groups of 4/5 students.
  - **Lab 1:** Introduction to Arduino **(Bonus Mark)**
    - ✓ Submission of written report on hardware design and programming code.
  - **Lab 2:** RFID projects using Arduino kits **(5%)**
    - ✓ Submission of written report on hardware design and programming code and **5-min video demonstration**
  - **Mini-project:** using practical knowledge from labs and chatbot support **(10%)**
    - ✓ Submission of written report on hardware design and programming code and **10-min video demonstration**
- Final exam: covering all teaching weeks **(70%)**
  - **Allowed: Handwriting** double-faced A4-sized cheating sheet

- A couple of QM+ online quizzes on teaching lectures **(Bonus Mark)**

Module Activities

Week 1
- Starting 30 March
- Lectures 1-2
- Tutorial 1: last 45 mins

Week 2
- Starting 6 April
- Lectures 3-4
- Tutorial 2: last 45 mins
- Class Test 1 (Date TBD)

Week 3
- Starting 11 May
- Lectures 5-6
- Tutorial 3: last 45 mins

Week 4
- Starting 18 May
- Lectures 7-8
- Tutorial 4: : last 45 mins
- Mock Exam
- Class Test 2 (Date TBD)

- Labs (Arduino):
  - Two lab sessions will take place in between the teaching weeks.
  - Work in groups (4/5 students) to share the hardware
  - Assignment submission deadlines: usually after lab session.
  - Mini-project due at the end of the term.
- Exact dates will be confirmed later on.

QM+ Quizzes will take place during term time for bonus marks

Module Content

Parts	Lectures	Teaching Weeks
I. RFID Basics	Lecture 1: RFID Introduction and Overview Lecture 2: RFID System Components	Week 1
II. Transmission Modes	Lecture 3: Wireless Communication principle Lecture 4: Checksum, Coding and Modulation	Week 2
III. Protocol	Lecture 5: RFID Anti-Collision Protocols Lecture 6: EPCGlobal Standard	Week 3
IV. System Design	Lecture 7: Key factors of system design	Week 4
V. Application & Practice	Lecture 8: Application pattern of RFID Lecture 9: Testing and analysis (self-study)	

Test 1

Test 2

Outline

- Definition and scope of RFID
- Automatic identification technologies
- Main features of RFID
- Core technology of RFID
- Brief History of RFID
- Development trends of RFID
- RFID and Internet of Things

DEFINITION OF RFID

What is RFID?

- **Definition**
  - RFID (Radio Frequency Identification) is a technology that uses radio waves to transfer energy and data between a reader and a movable item to identify, categorize, track, …
  - The item can be an object, a person, an animal, etc.
- RFID is fast, reliable, and does not require physical sight or contact between reader/scanner and the tag.

- RFID, dates back to the invention of RADAR, where, during the Second World War, fighter pilots cleverly maneuvered their planes to be remotely identified by friendly radar operators, who distinguished them from their foes (Identify Friend or Foe).

What Makes an RFID System

- RFID Tag (Transponder):
  - Microchip: Stores data (e.g., unique identifier).
  - Antenna: Allows for communication with the reader.
  - Passive vs. Active tags:
    - Passive Tags: No battery, rely on energy from the reader.
    - Active Tags: Contain a battery and can transmit signals over a longer range.
- RFID Reader (Interrogator):
  - Roles: Transmit and receive signals between the reader and the tag.
  - Reader Types: Fixed, handheld, and mobile readers.
- Antenna:
  - Role: Allows the exchange of data between the tag and reader.
  - Types: Directional, omni-directional, near-field, and far-field antennas.

- Software (Middleware)
  - Role: Software used to process data between the RFID system and enterprise applications.

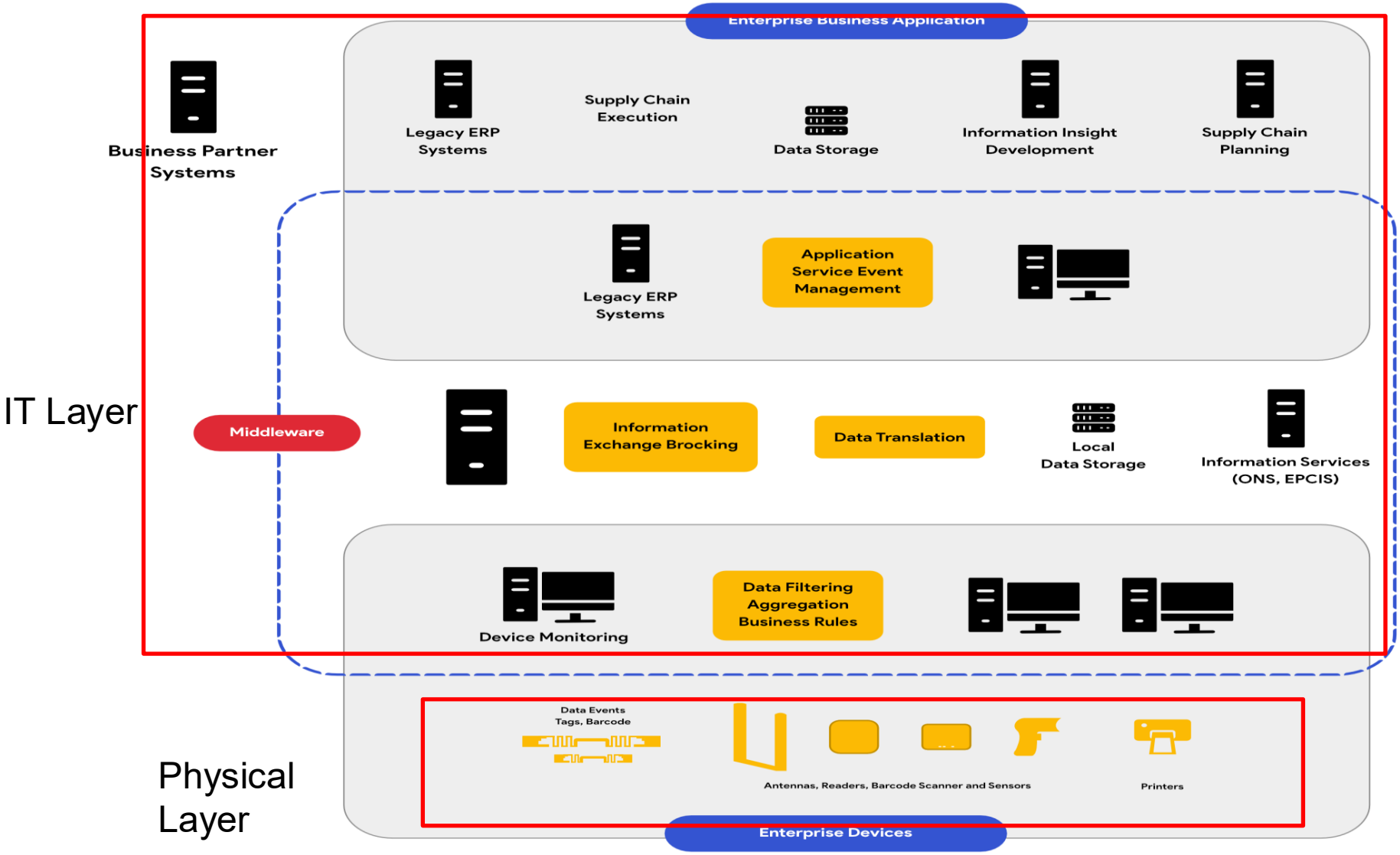
Enterprise Business Application
Business Partner Systems
Legacy ERP Systems
Supply Chain Execution
Data Storage
Information Insight Development
Supply Chain Planning
Legacy ERP Systems
Application Service Event Management
IT Layer
Middleware
Information Exchange Brocking
Data Translation
Local Data Storage
Information Services (ONS, EPCIS)
Device Monitoring
Data Filtering Aggregation Business Rules
Data Events Tags, Barcode
Antennas, Readers, Barcode Scanner and Sensors
Printers
Physical Layer
Enterprise Devices

How Does RFID Work?

- **Basic Workflow:**
  1. Reader: The RFID reader sends a radio signal to the tag, which powers it and causes the tag to respond with its stored data.
  2. Tag: The tag, powered by the reader's signal (for passive tags), emits a unique ID or data when it comes into range.
  3. Communication: The data is sent back to the reader, which transmits it to the system for processing.
- **No Line of Sight Needed:**
  - Unlike barcodes, RFID does not require a direct line of sight between the reader and the tag.
- **Multiple Tags:**
  - Multiple RFID tags can be read simultaneously, making RFID more efficient for tracking large quantities of items.

RFID Global Market

RFID

MARKETSANDMARKETS™

CAGR of 2022-2030

11.9%

MARKET OPPORTUNITY OVER NEXT 8 YEARS

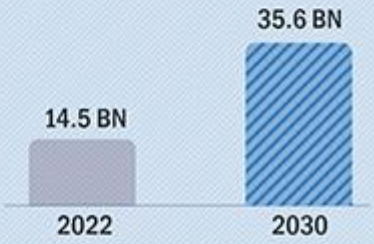

KEY MARKET PLAYERS

- Zebra Technologies
- Alien Technology
- CAEN RFID
- Impinj
- Avery Dennison

THE KEY DRIVERS OF THE MARKET WILL BE:

- Increasing need for RFID systems in manufacturing units for improving productivity
- Availability of cost-efficient RFID solutions that provide high returns on investment

The market is consolidated with top players dominating the market with >50% market share.

ASIA PACIFIC IS GOING TO BE THE LARGEST REGION DURING THE FORECAST PERIOD

MARKET SEGMENTATION BY OFFERING

- Tags
- Readers
- Software & Services

AUTOMATIC IDENTIFICATION SYSTEMS

Automatic ID Systems

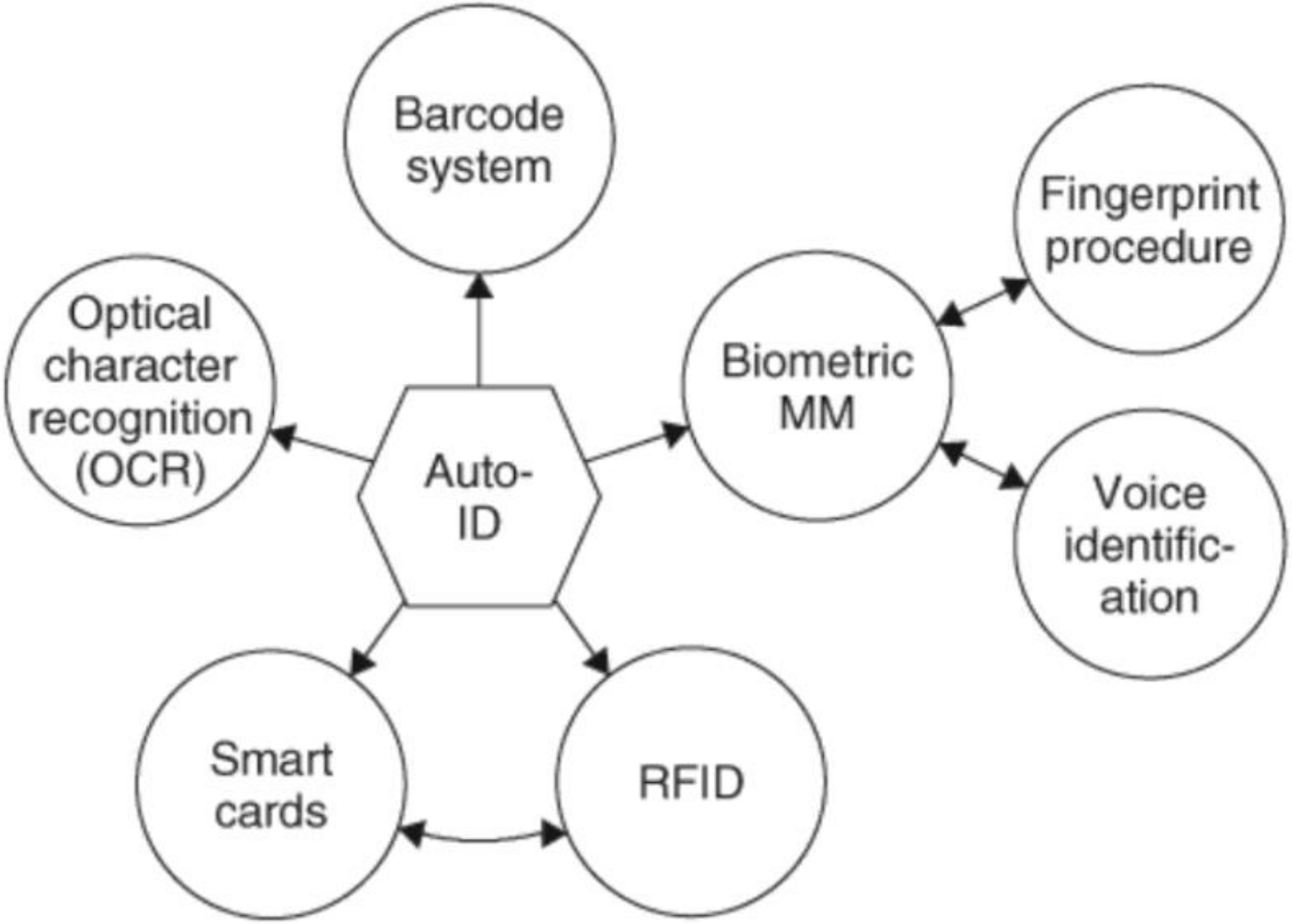

Automatic Identification Technology

Human identification

The earliest **identification** technology originated in humans. Humans use their own perceptual system to identify external physical objects **effectively**, including visual, auditory, tactile, taste and so on.

The cost is too high

Automatic identification

The essence of the recognition technique is to distinguish and identify the physical objects using their identifiable features.

Biometric Procedures

- Biometrics is defined as the science of counting and (body) measurement procedures involving living beings.
- In the context of identification systems, biometry is the general term for all procedures that identify people by comparing unmistakable and individual physical characteristics.
- In practice, there are various biometric procedures:
  - Fingerprinting procedures
  - Voice identification
  - Face recognition
  - Retina identification
  - Heartbeat recognition technology

Fingerprint Identification

Fingerprint identification uses the uniqueness and stability of fingerprint to verify user identity by comparing the collected fingerprints with the pre-sampled fingerprints.

Stability

High accuracy of identification
Low error rate
Each fingerprint has multiple feature points
Each feature point has 5 to 7 features
Ten fingers can produce at least 4900 independent features that can be measured

High speed

Fingerprint match can be completed in 1 to 2 seconds

Miniaturization

Intelligent

Low price
…

Security issues

Fingerprints are easy to leave over
Fingerprint replication is getting easier

Speech Recognition

Speech recognition uses the difference between each person's tone and timbre to identify different people.

Feature extraction module

Statistical acoustics model

Pronunciation dictionary

Language model

Decoder

Speech Recognition (Cont'D)

- Technical Features

Easy to use, and easily accepted by the user

Cheap sound equipment, and not involve user's privacy

Due to the lack of international standards, there are some difficulties in promoting

Face Recognition

Face recognition is based on human face features.
It performs identity authentication by analyzing the input face image.

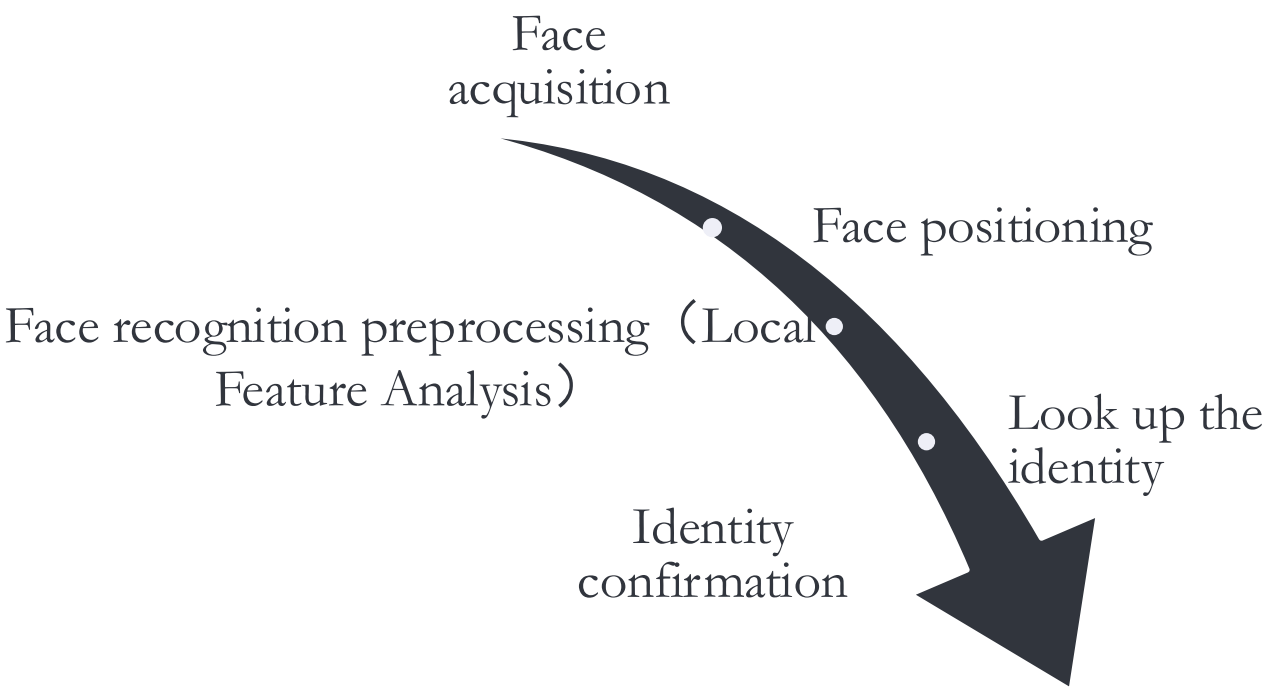

Face Recognition (Cont'D)

- Technical Features

Surroundings, hair ornaments, age can affect the recognition rate

Fast recognition speed, not easy to be aware of it

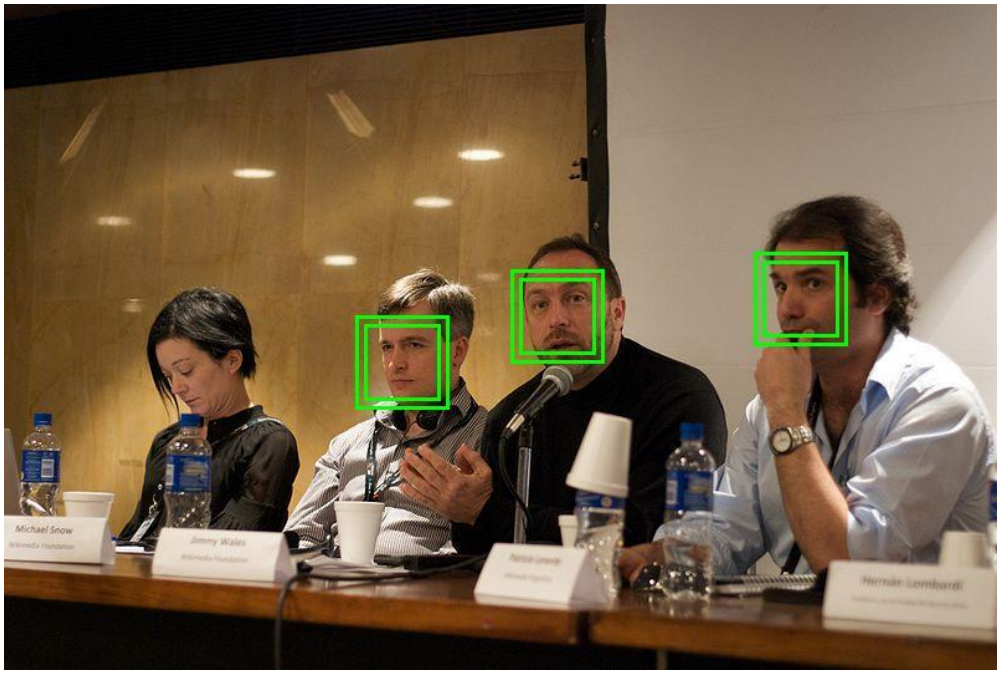

Other Biometric Procedures

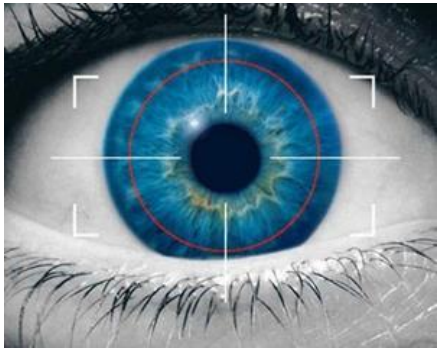

Retina recognition technology: distinguish each person by analyzing the vascular pattern on the retina.

Heartbeat recognition technology: identify the user identity by collecting heartbeat signal pulse through a specific instrument and then identify the inherent characteristics of each person heartbeat.

Bar Codes

- The barcode is a binary code comprising a field of bars and gaps arranged in a parallel configuration

Linear bar code

2-D bar code

- **History:**
  - The first barcode was developed by Bernard Silver and Norman Joseph Woodland in the late 1940s and early 1950s.
  - The first commercial use of barcodes was by the RCA/ Kroger system installed in Cincinnati on the behest of the National Association of Food Chains (NAFC).
  - It was not widely used until the **Universal Product Code (UPC)** was introduced in America as early as 1973 and adopted by the US Supermarket Ad Hoc Committee.
- The most popular barcode by some margin is the **EAN code (European Article Number)**, which was designed specifically to fulfil the requirements of the grocery industry in 1976.
- Today, the UPC represents a subset of the EAN code, and is therefore compatible with it.

1D Barcode Recognition

1D barcode is a combination of lines and blanks in accordance with certain coding rules to represent certain information.

1D barcode only express information in the horizontal direction, and in the vertical direction does not express any information. It usually retains a certain height to facilitate the alignment of the reader.

Limited storage capacity, need to combine with the database.
The barcode size is relatively large, the space utilization is low.
Fault tolerance is poor, cannot restore the information after the corruption.

2D Code Recognition

2D code uses black and white graphics on the two-dimensional plane to record data, these geometric patterns express specific information through a certain regulation of distribution .

Positioning point technology: 2D code usually has three positioning points for the reader to identify. Because of these positioning points, 2D code can be identified no matter what direction to read.

Fault tolerance: the information can be correctly restored when it does not recognize all of the 2D code, or if the 2D code is defaced.

Large storage capacity. Up to 32KB.
High information density. Can store text, sound, pictures and other information.
Powerful error correction capability. 2D code can still be identified in the case of 50% defacement.
Support for encryption. Multiple security features.

Card Technologies

- Magnetic cards: containing either a magnetic strip or a magnetic object in the card, encoded with digital data
- Smart cards: credit card-sized pieces of plastic containing a data storage system. Two type: memory cards and microprocessor cards
- Optical cards: use a technology similar to the one used for music CDs or CD-ROMs

ComputerHope.com

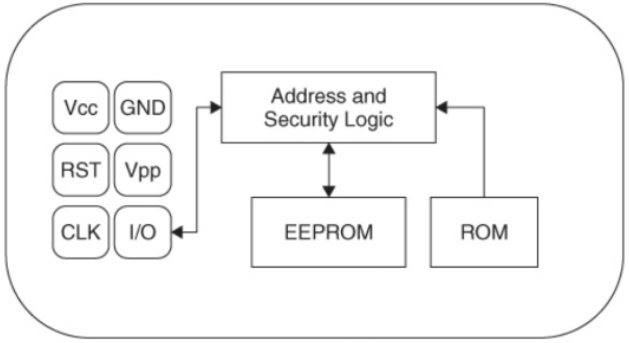

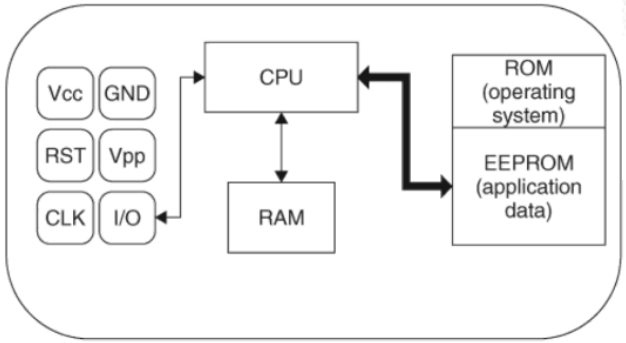

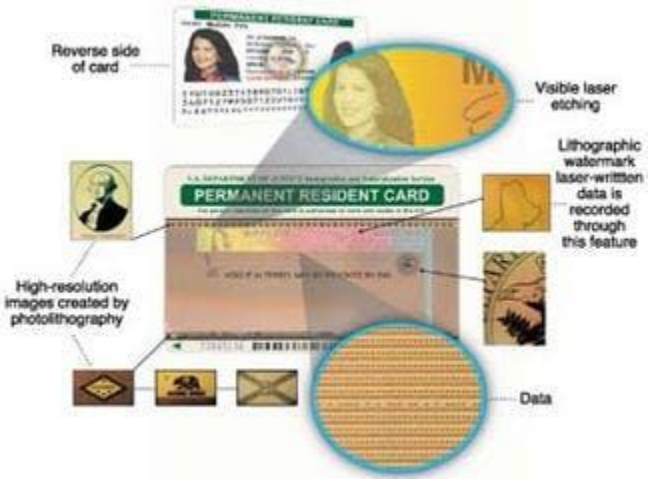

Summary of Automatic Identification Technologies

	Data Density (Bytes)	Reading Speed	Machine Readability	People Readability	System Cost	Distance to Reader
Biometry	-	Very low > 5-10s	Expensive	Difficult	Very high	Direct contact
Speech Recognition	-	Very low > 5s	Expensive	Simple	Very high	0-50cm
Barcode	1-100	Low ~ 4s	Good	Limited	Very low	0-50cm
Smart cards	16-64 k	Low ~ 4s	Good	Impossible	Low	Direct contact
RFID	16-64 k	Very fast ~ 0.5s	Good	Impossible	Medium	0-5m, microwave

RFID vs Barcode (Cont'D)

Read Rate	Only one at a time	10's, 100's Or 1000's simultaneously
Read Range	Several inches upto several feet	Passive UHF RFID: -Up to 40 feet (fixed readers) -Up to 20 feet (handheld readers) Active RFID -Up to 100's of feet or more
Read Speed	Slow	very fast (ms)
Readable through objects	No, must be line of sight	Yes
Identification	Most barcodes only identify the type of item (UPS Code) but not uniquely	Can uniquely identify each item/asset tagged

asset∞

- Three advantages of using RFID compared to bar code scanning are:
  - **More efficiency:** you can scan multiple items at once
  - **More durability:** tags can handle exposure to weather conditions like sun and rain
  - **More security:** you can encrypt RFID tags so only your reader can get the data

RFID vs NFC

Near-field communication (NFC) is a subset of the RFID technology family. The big difference is that NFC is used for two-way communication. Instead of the scanner receiving or sending data, both ends can receive and send information.

RFID		NFC
3-5 M	RANGE	1-10 CM
ONE-WAY	TYPE OF COMMUNICATION	TWO-WAY
FASTER, MULTIPLE TAGS	DATA TRANSFER SPEED	SLOWER, 1 TAG AT A TIME
SIMPLE ID DATA	DATA TYPES	MULTIPLE DATA TYPES

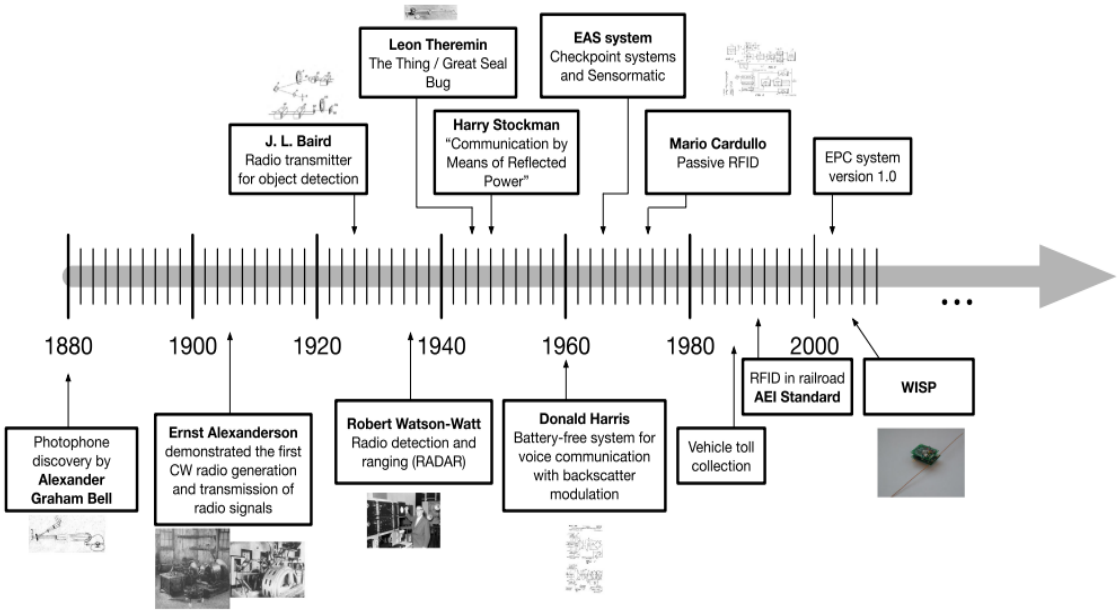

HISTORY OF RFID

WWII Technology

RFID started as early as World War II, where airplanes used to be identified as **"friend or foe"** using this technology.

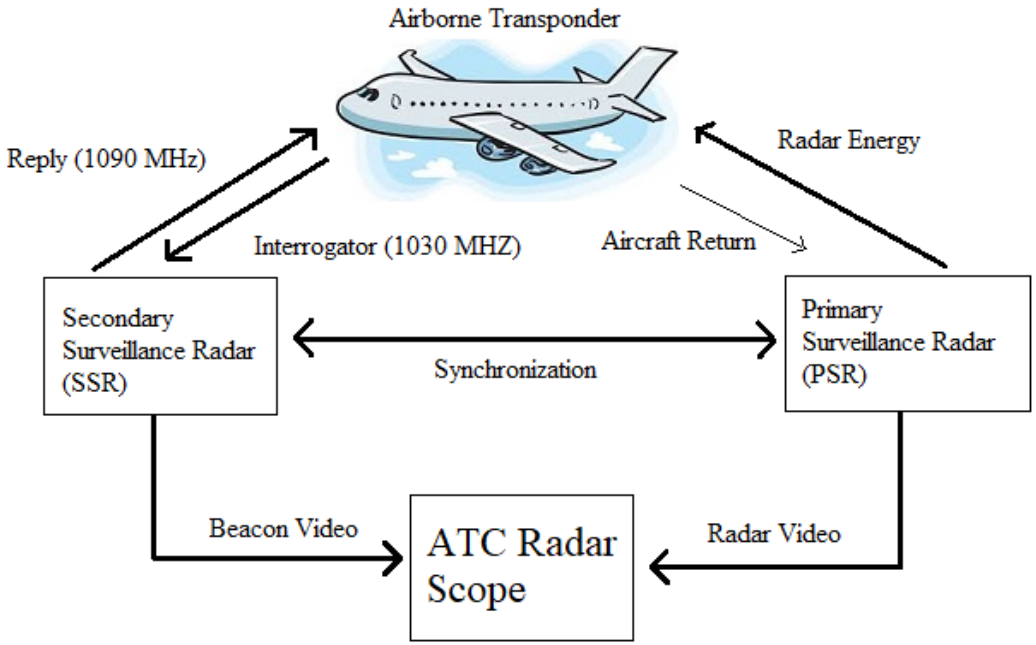

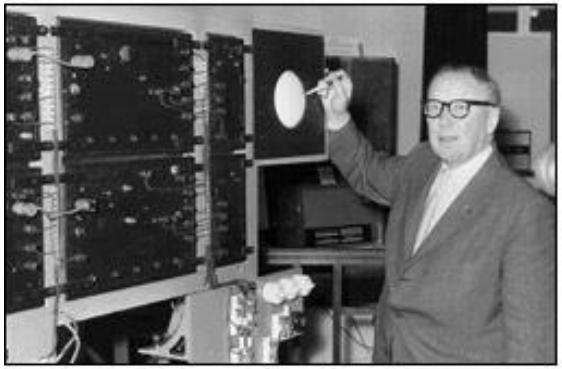

Radar discovered by, Sir Robert Alexander Watson-Watt, in 1935

The optical barcode, the nearest rival of RFID, came to commercial usage in the 1960s or 1970s.

From the late 1970s, due to increase in complexity and volume of business, requirement of a new technology came to the forefront and hence started the journey of RFID

RFID in 70s

- In 1948, **Harry Stockman** first showed "Communication by means of reflected power". It promoted the idea that "…considerable research and development work has to be done before the remaining basic problems in reflected-power communication are solved, and before the field of useful applications is explored."
- In the 50s and 60s, the anti-theft detection and electronic surveillance systems popped up that all used RF technology.
- RFID wasn't officially patented until 1973, in a landmark claim by **Mario W. Cardullo**, who created an active RFID tagging system that utilized rewritable memory.
- That same year, a passive RFID system was patented by **Charles Walton**, who could unlock doors without a key—still used today in many hotel rooms.
- Until 1979, researches related to RFID remained within different laboratory research. For the first time, it had commercial usage in **animal tracking** in the United States. This was followed by **motor vehicle toll collection** in Norway in 1987, followed by RFID tracking of US rail cars in 1994.

Setting Standards

- In 1999, the **Auto-ID** center was founded by MIT scientists to standardize the RFID-encoded information format.
- This group had previously created the **Electronic Product Code (EPC)** for RFID tags.
- Absence of related technologies like database management and manufacturing process for small sized chips restricted the proper development of this technology in the initial phase.
- **Auto-ID** group collaborated with **Alien Technology** to develop a fluidic flow process that utilized vibrations to assemble the chips → **massive parallel assembly + lowering manufacturing costs**
- In 2003, **EPCGlobal** systems came to being and they started standardizing RFID from all possible directions.
- This was the biggest boost up that this technology received, followed by the mandates and demands of the giants like Wal-Mart, US Department of Defense, Gillette, and so on.

History of RFID (Summary)

- **Early Beginnings:**
  - 1940s: RFID technology has roots in radar systems developed during WWII.
  - 1948: The concept of passive radio-frequency identification is introduced by Harry Stockman, who wrote about the potential for using radio waves to transmit information for identification purposes.
- **Development Milestones:**
  - 1960s: The first RFID tag was created for use in toll collection.
  - 1970s: Early commercial use of RFID tags for asset tracking and livestock identification.
  - 1990s: Introduction of EPC (Electronic Product Code) and the formalization of RFID standards.
  - 2000s: Widespread adoption of RFID in supply chain management, retail, and healthcare.
- **Modern-Day RFID:**
  - The rapid development of low-cost, efficient RFID tags.
  - Growth of smart labels (integrated RFID chips with barcodes or sensors).

MAIN FEATURES OF RFID SYSTEMS

RFID Systems

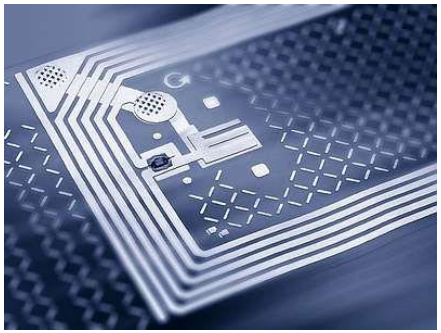

Provide an effective solution for the core problem of "**realizing passive intelligence**", "**globally unique identification**" and "**low-cost interconnection**" in Internet of Things applications.

- Non-contact automatic fast identification
- Accurate and efficient identification
- Low cost and low power consumption
- Certain computing and storage capabilities

Main Features of RFID (Cont'D)

Non-contact automatic and rapid identification

The RFID tag returns data by **backscattering** the energy, with an effective communication range of 6-10 m.

The RFID system uses an effective **anti-collision mechanism** to read tags, enabling rapid identification of a large number of tags.

Permanently store a certain amount of data

RFID tag has a user storage area, which can store 1KB-10KB of user data.

Main Features of RFID (Cont'D)

Simple logical processing

RFID has a very limited number of internal logic gates, so only a simple logical processing can be made.

But the RFID system can use the basic logic processing ability of tags to achieve some effective protocols and algorithms to improve the system operating efficiency and security performance.

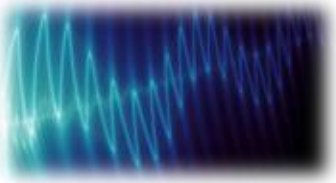

Reflection signal strength is affected by the distance and other factors significantly

Since the RFID tag itself is a passive device, the feedback signal must be modulated by backscatter. Therefore, the strength of the RFID tag reflection signal is susceptible to the surrounding environment, including distance, reader power, signal interference, and tag deployment density.

Main Features of RFID (Cont'D)

Low cost, can be deployed at a large scale

RFID tags tend to large-scale mass production using printed circuits, so manufacturing costs can be significantly reduced. At present, the cost of an RFID tag can be controlled at around 10 cents.

RFID CHALLENGES

RFID Challenges

RFID constraints

- Limited tag resources
  - Computing ability
  - Storage space
  - Communication bandwidth
- Performance in a real environment is susceptible to many factors
  - Reader's transmitting power
  - Energy absorption, path loss, multipath effect
  - Distribution and deployment of tags
  - Signal interference

RFID Challenges (Cont'D)

Achieve low latency, and efficient identification

Anti-collision transmission mechanism

- Achieve the positioning of the target

Positioning and mobile behavior sensing

Information storage, retrieval and mining

- Provide a gateway from the physical world access to the information world

Security certification and privacy protection

Ensure the credibility and security of the interaction

RFID Challenges (Cont'D)

- **Anti-collision mechanism**
  - Conflict between tags, between readers, between reader and tags
  - Traditional wireless communication protocols (such as CSMA / CA) are not available
  - RFID environment: tag identification protocols must be simple and efficient
  - How to effectively avoid conflicts, improve transmission performance, and reduce the scan delay?

- **Efficient information storage, retrieval and mining**
  - How to efficiently store, retrieve and mine ID, keyword information, and sensing data carried by RFID tags in a distributed environment?

RFID Challenges (Cont'D)

- **Make full use of the attenuation laws of backscatter signal to assist in positioning and mobile behavior sensing**
  - Accuracy Low precision: within a few meters; High precision: within a few centimeters
  - Real time
  - Stable Mean error, stability (confidence interval of error)
- **Security certification and privacy protection**
  - Forged tags: how to validate?
  - Malicious reader: how to prevent illegal access and protect user privacy effectively?
  - Existing algorithms require more logical processing units, e.g., AES requires 20000-30000 logic gates
  - RFID tags have only 5000-10000 logic gates
  - How to implement authentication and privacy protection protocols in a resource-constrained RFID system in a lightweight way?

CURRENT SITUATION OF RFID

RFID Today

- RFID is now widely used to track items in almost every sector, from biomedical labs to aerospace, engineering, and logistics. It has many advantages over conventional barcodes, including storing far more information and reading multiple tags simultaneously without having to remove items from storage.
- Costs have been reduced even further with the use of carbon nanotubes to produce chips.
- As RFID technology continues to evolve, it will eventually become cheaper and more user-friendly, keeping inventories and workflows up to date and well-managed.

Abroad

RFID in the United States, Europe, Japan, Korea and other countries and regions have been widely used in industrial, intelligent transportation, logistics management, retail and other fields.

Internal

In April 2005, the National Science and Technology Ministry launched the 863 Project "Radio Frequency Key Technology Research and Development"

China's RFID industry is developing rapidly, but there is still a gap compared with the advanced countries.

- Less RFID software companies
- RFID applications are mainly intermediate and low frequency
- RFID standards are not fully implemented
- The safety and stability of RFID needs to be improved

RFID Applications

- Supply Chain Management:
  - Inventory tracking and logistics management.
- Healthcare:
  - Tracking medical equipment, patient identification.
- Retail:
  - Anti-theft, inventory management, and automated checkouts.
- Access Control:
  - Secure entry systems using RFID badges or cards.

Table 3.1 RFID Summary Table

Frequency	*Range*	*Tag Cost*	*Applications*
Low frequency (125–148 kHz)	3 feet	$1+	Pet and ranch animal ID; car key locks
High frequency (13.56 MHz)	3 feet	$0.50	Library book ID; clothing identification; smart cards
Ultrahigh frequency (915 MHz)	25 feet	$0.50	Supply chain tracking: box, pallet, container, trailer tracking
Microwave (2.45 GHz)	100 feet	$25+	Highway toll collection; vehicle fleet ID

Examples of RFID Tags and Readers in Retail

Advanced Apparels' RFID stock locator: https://vimeo.com/702587628

Unilever's Ice Cream Shop

Ralph Lauren's RFID-based Fitting Room: https://vimeo.com/healeycypher/oakfitroom

China's First RFID Inventory Robot

DEVELOPMENT TRENDS IN RFID

Energy Acquisition Mode

Traditional wired transmission: obviously no longer feasible

Battery-powered: increase the weight and volume, the battery needs to be changed regularly

Wireless charging: not yet reached the practical use

Backscatter: time of endurance is prolonged indefinitely, small node size

Disadvantages: rely on the reader, one to many centralized communication

Energy Acquisition Mode (Cont'D)

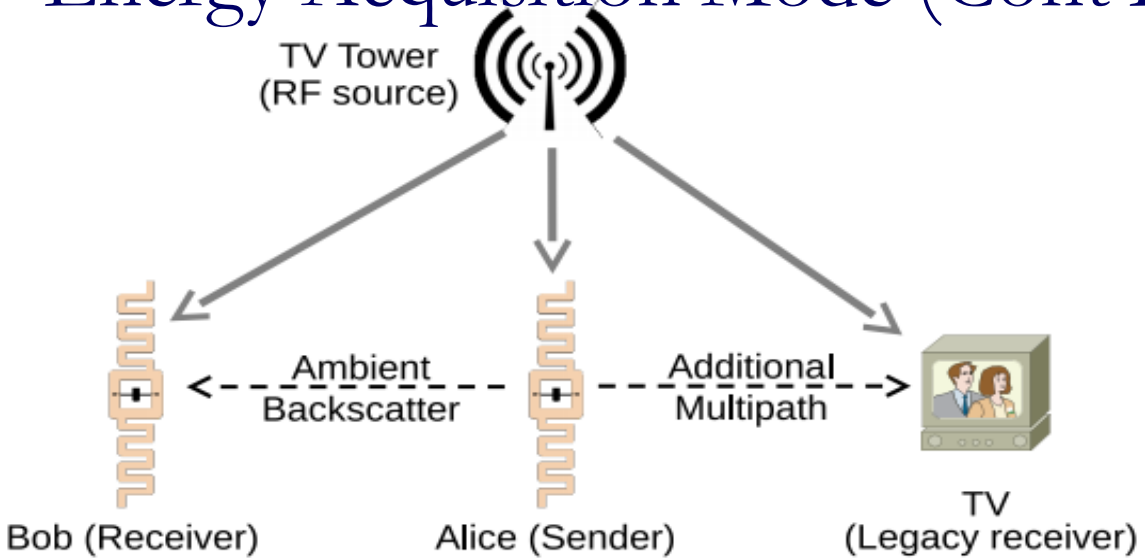

Energy acquisition mode: Design and implement innovative energy harvesting ways to support communication between systems, in order to fully expand the scope and deployment scale of RFID applications.

Ambient backscatter: Create new types of network communication by leveraging radio signals (such as television and cellular network base station signals) that are prevalent in the environment.

"Ambient Backscatter: Wireless Communication Out of Thin Air", ACM SIGCOMM 2013, best paper award.

Video link: https://www.bilibili.com/video/av542157634/

Support Point-to-Point Communications

Support point-to-point communication: Design and implement innovative channel awareness technologies that enable RFID devices to establish networks and implement point-to-point communications in a passive way to support multiple distributed applications.

Combine with Sensors

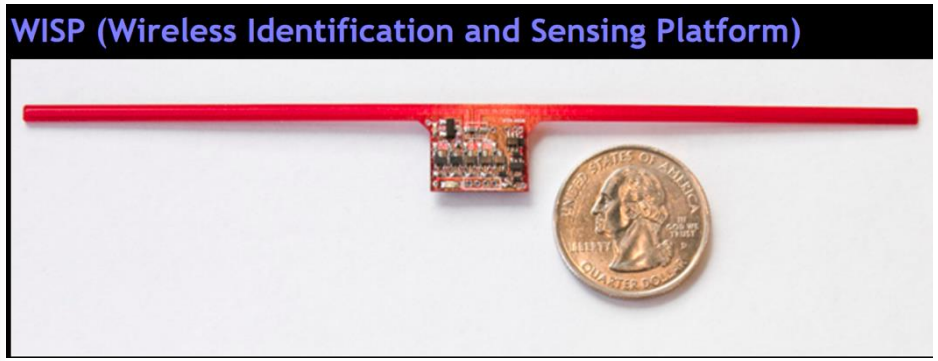

Combine with Sensors: Integrating existing micro-sensor devices, combined with multimode sensors, provides a richer application model based on backscatter technology.

RFID and Internet of Things

- In the Internet of things, RFID will embed intelligence in the physical object, so that simple physical objects can also “say”.
- In the Internet of things, RFID allows a physical object to be uniquely identified in a way similar to the "IP address" of a computing node in the Internet.
- In the Internet of things, RFID provides a low-cost communication way to achieve effective communication between nodes.
- In the Internet of things, RFID makes the physical objects in a passive environment achieve "passive intelligence“, providing fundamental guarantee for the “thing-thing connection" .

Other Future Trends in RFID

- **RFID and Blockchain:**
  - RFID is being combined with blockchain technology to enhance security, transparency, and traceability in supply chains, especially in industries like pharmaceuticals and food safety.
- **Wearable RFID Technology:**
  - The use of RFID technology in wearables (e.g., smart watches, health-monitoring devices) is expanding. This will help in personalized healthcare and asset tracking in real-time.
- **Advanced Anti-Collision Algorithms:**
  - With the increasing adoption of RFID in complex environments (e.g., warehouses, logistics), more sophisticated anti-collision algorithms will be developed to handle large numbers of tags being read simultaneously with minimal interference.
- **UHF RFID for Consumer Applications:**
  - Wider use of UHF RFID in consumer products for applications like smart retail, inventory management, and self-checkout systems, allowing for better customer experience and operational efficiency.
- **RFID in Smart Packaging:**
  - The integration of RFID with smart packaging will allow brands to improve product tracking, authentication, and customer engagement.

RFID WITH ARDUINO

Practical Insights: RFID with Arduino

- What is Arduino?: Arduino is an open-source electronics platform based on easy-to-use hardware and software.
- RFID and Arduino: Arduino can be used to interface with RFID tags and readers, enabling practical applications such as access control, asset tracking, and inventory management.
- Basic Components:
  1. Arduino Board: For processing and controlling the project.
  2. RFID Reader: Such as the MFRC522 module, commonly used in Arduino projects.
  3. RFID Tags: Passive or active RFID tags.
  4. Jumper Wires: To connect the RFID reader to the Arduino board.

Setting Up RFID with Arduino

- Required Components:
  - Arduino Uno or similar board.
  - RFID Module (e.g., MFRC522).
  - RFID tags/cards.
  - Jumper wires and breadboard (optional).
  - LED for visual feedback (optional).
- Connections:
  - Connect the RFID module to the Arduino using specific pins for SPI communication (SDA, SCK, MOSI, MISO, IRQ, and RST).
  - Optionally, connect an LED to indicate successful tag scanning.

RFID Arduino Code Example

```
#include <SPI.h>
#include <MFRC522.h>

#define RST_PIN 9  // Reset pin
#define SS_PIN 10  // Slave select pin

MFRC522 mfrc522(SS_PIN, RST_PIN);  // Create MFRC522 instance

void setup() {
  Serial.begin(9600);  // Initialize serial communication
  SPI.begin();  // Initialize SPI bus
  mfrc522.PCD_Init();  // Initialize MFRC522 module
  Serial.println("Approach an RFID tag to read its UID.");
}

void loop() {
  if (mfrc522.PICC_IsNewCardPresent()) {  // Check if a new card is present
    if (mfrc522.PICC_ReadCardSerial()) {  // Read the card's serial number
      Serial.print("UID of the card: ");
      for (byte i = 0; i < mfrc522.uid.size; i++) {
        Serial.print(mfrc522.uid.uidByte[i] < 0x10 ? " 0" : " ");
        Serial.print(mfrc522.uid.uidByte[i], HEX);
      }
      Serial.println();
      mfrc522.PICC_HaltA();  // Halt the card
    }
  }
}
```

Practical Applications of RFID with Arduino

1. Access Control System:
   Use RFID to open doors based on authorized RFID tag access.
2. Inventory Management:
   Track and manage assets using RFID tags and Arduino.
3. Time Tracking:
   Employees use RFID tags to clock in and out of work.
4. Library Book Check-out System:
   Automatically check out books by scanning RFID tags attached to the books.

Challenges and Considerations in Using RFID with Arduino

- Distance Limitations: RFID tag reading distance can be limited, especially with passive tags.
- Interference: Materials like metal and liquids can interfere with the RFID signal.
- Power Consumption: Active RFID tags need a power source, whereas passive tags do not.
- Data Security: Proper security measures must be considered when dealing with sensitive data.

Enhancing RFID Projects with Sensors and Arduino

- Integrating Sensors: Adding environmental sensors (e.g., temperature, humidity) to RFID projects for more intelligent data collection.
- Use Case Example:
  - Combine a temperature sensor with an RFID reader to monitor perishable goods.
  - Use a motion sensor in combination with an RFID reader for security purposes.

Summary

In today's session, we've learnt about:

- What does mean RFID?
- Different types of automatic identification technology
- Main features of RFID
- Core technology of RFID
- Brief History of RFID
- Development trends of RFID
- RFID and Internet of Things

Thank You

Dr Fatma Benkhelifa

Queen Mary
University of London