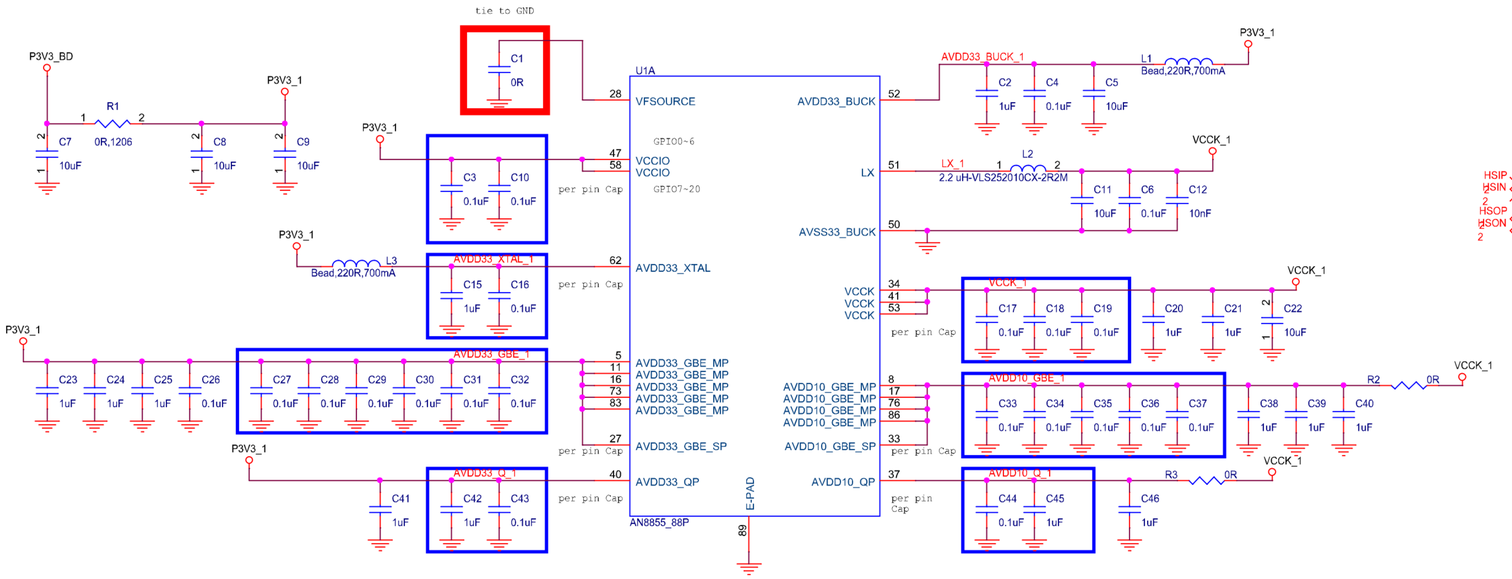

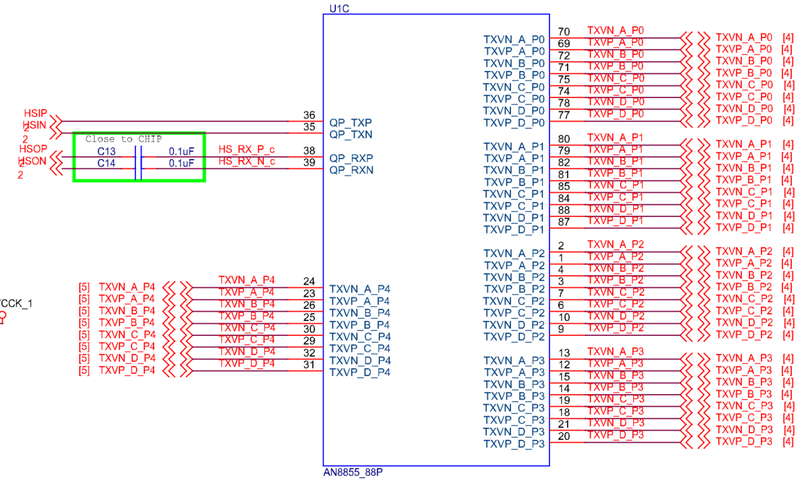

GPIO2 -> Port4, PD, LED High Active
GPIO3 -> Port3, PD, LED High Active
GPIO4 -> Port2, PU, LED Low Active
GPIO5 -> Port1, PD, LED High Active
GPIO7 -> Port0, PD, LED High Active

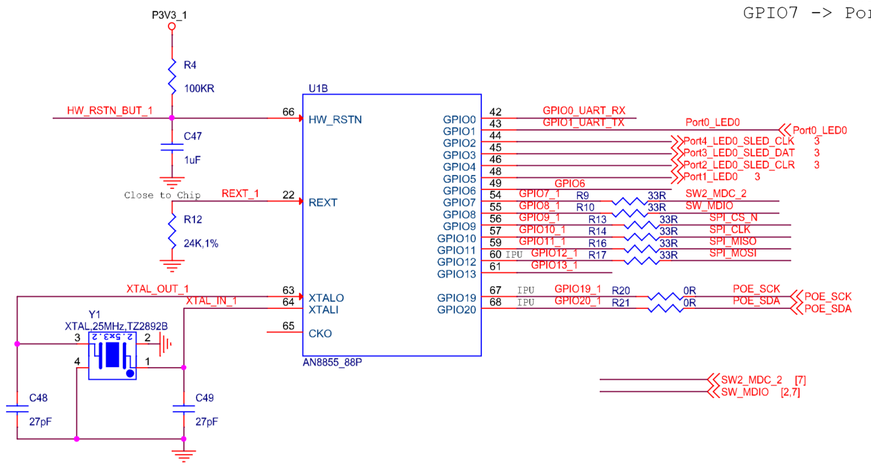

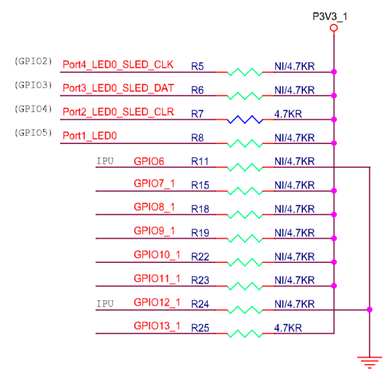

HW Trap	AN8855M	Default	Setting
GPIO_2	Must floating/Pull down	1'b0	1'b0
GPIO_3	spi_adr_mode 1'bo:3-byte (default) 1'b1:4-byte	1'b0	1'b0
GPIO_4 GPIO_5	boot_mode[1:0]{GPIO5, GPIO4} 2'b0X: boot up from SPI FLASH.	2'b00	2'b01
GPIO_6	Must floating/Pull up	1'b1	1'b1

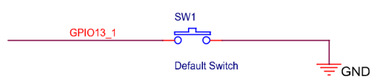

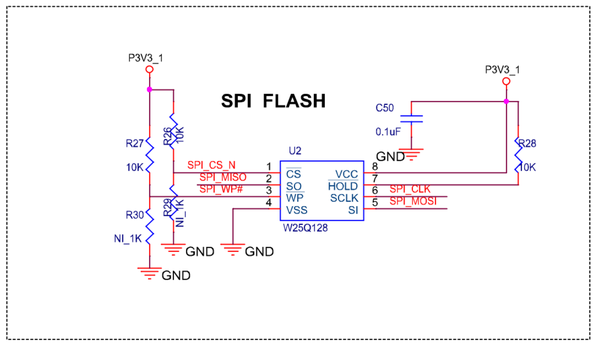

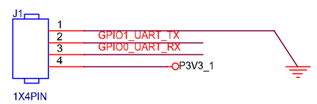

Title: AN8855M-1

Size: C | Document Number: | Rev: v1.1

Date: Tuesday, May 26, 2026 | Sheet 2 of 7

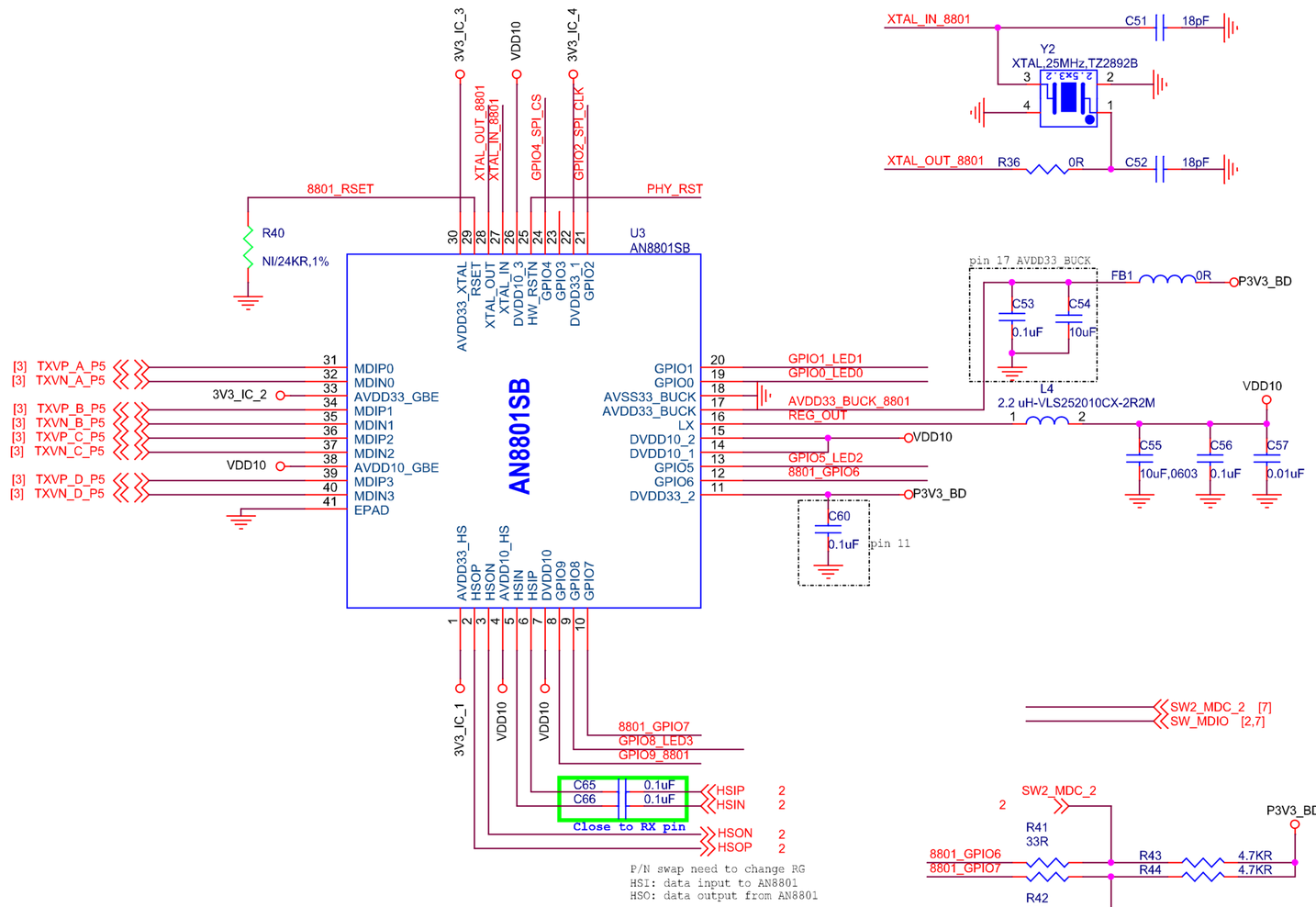

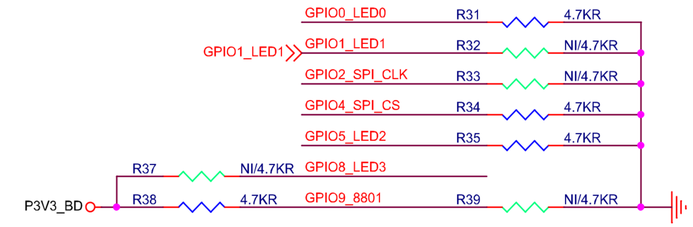

Power Decoupe Cap

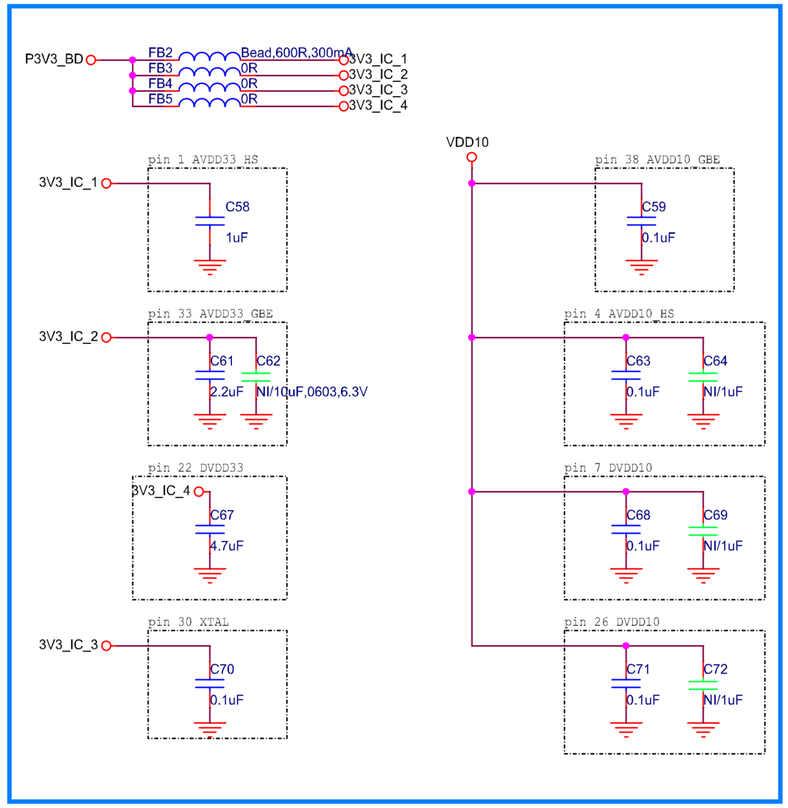

Reset

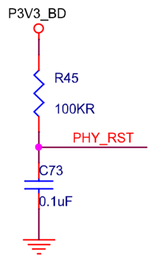

Title <Title>		
Size A3	Document Number <Doc>	Rev <RevCode>
Date: Tuesday, May 26, 2026	Sheet 3 of 7	

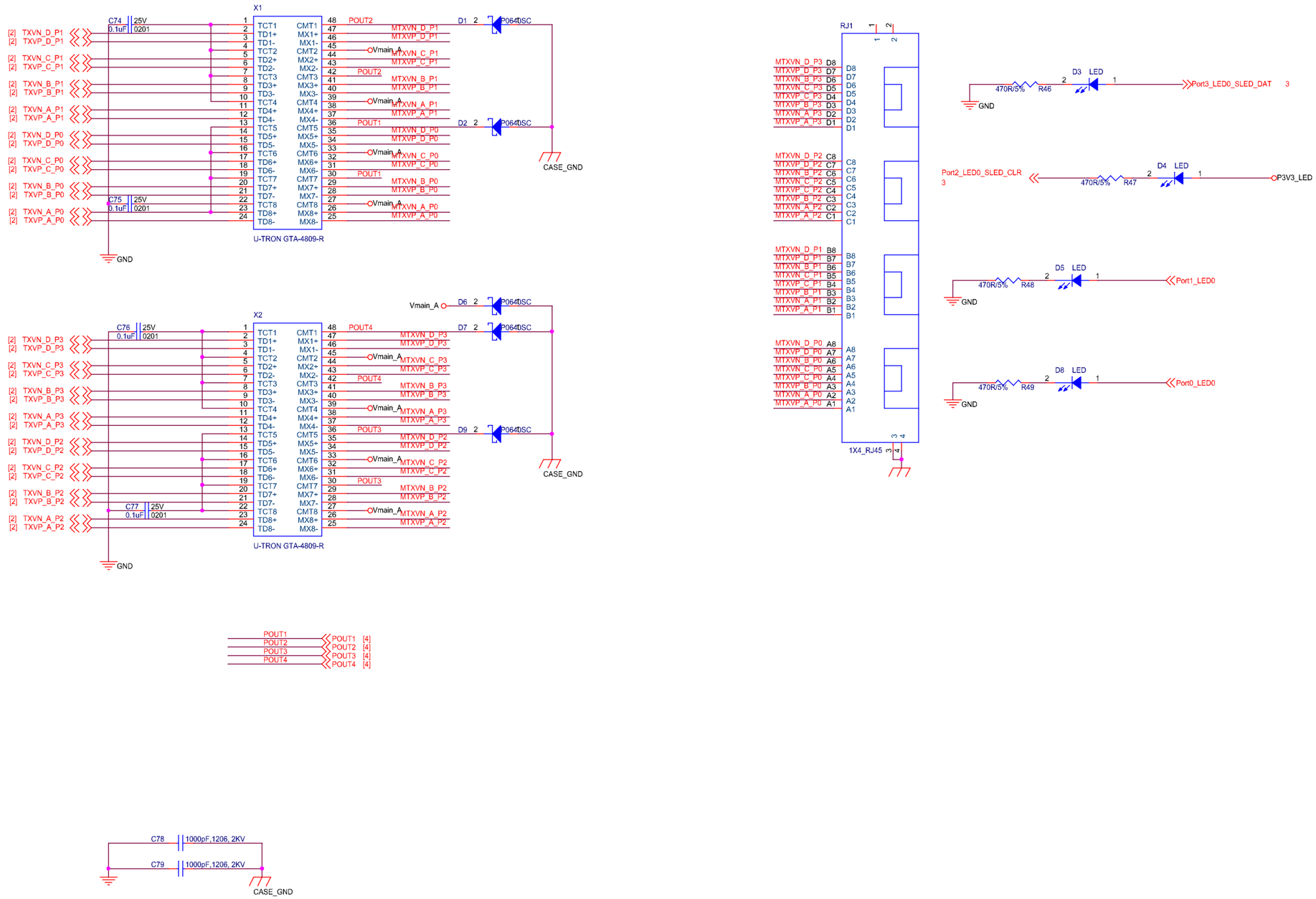

Title

Transformer 0-3

Size C | Document Number | Rev v1.1

Date: Tuesday, May 26, 2026 | Sheet 4 of 7

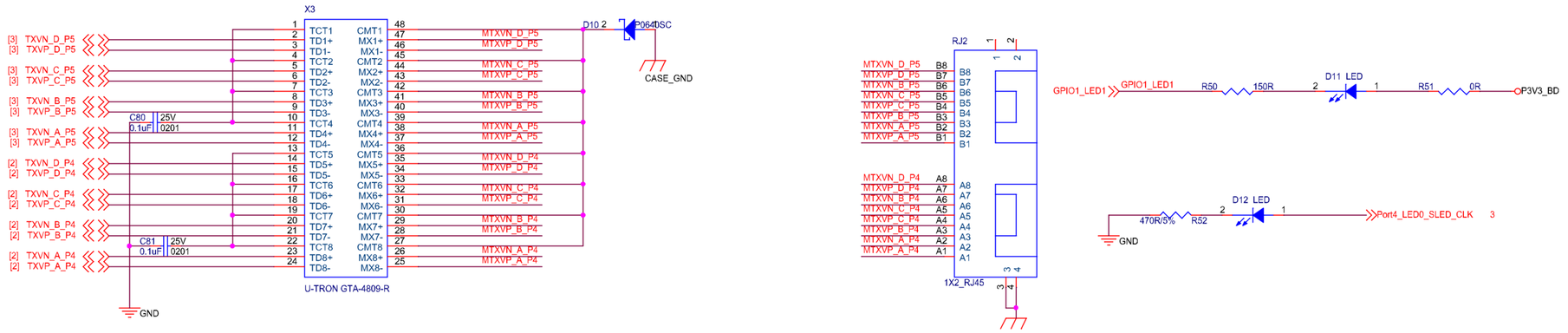

NI & Green Part = not installl

Title	Transformer 4-5
Size C	Document Number
Rev	v1.1
Date: Tuesday, May 26, 2026	Sheet 5 of 7

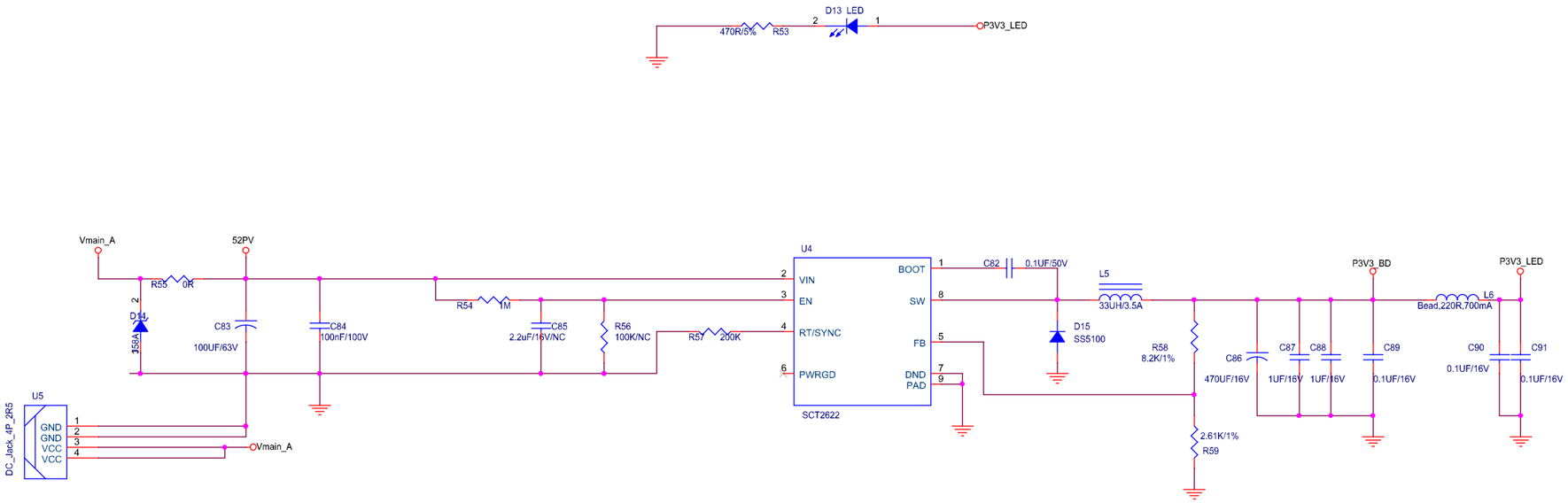

Title	DC-DC	
Size C	Document Number	Rev v1.1
Date: Thursday, April 16, 2026	Sheet 6 of 7	

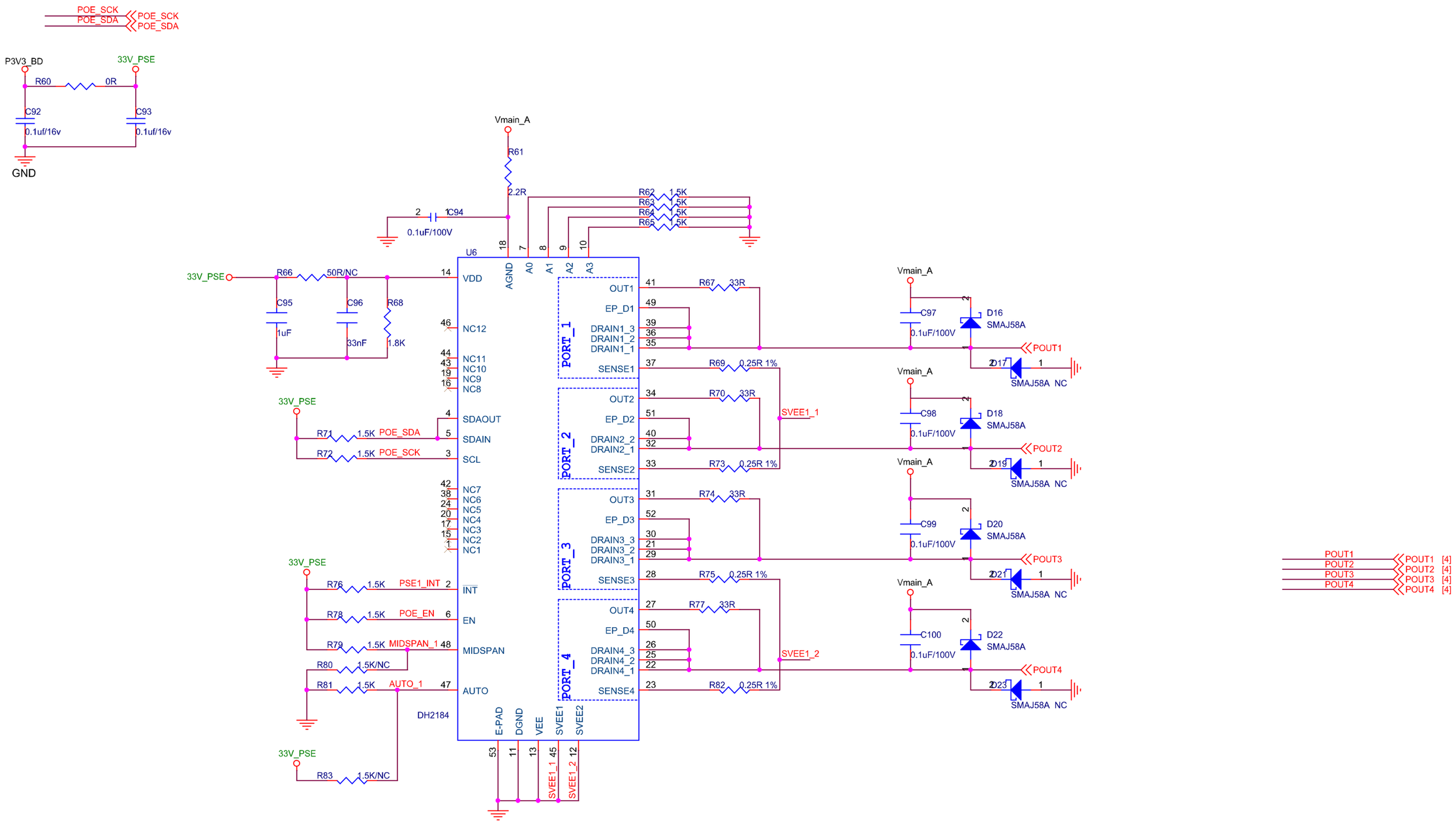

Title <Title>		
Size A3	Document Number <Doc>	Rev <RevCode>
Date: Thursday, April 16, 2026	Sheet 7 of 7	