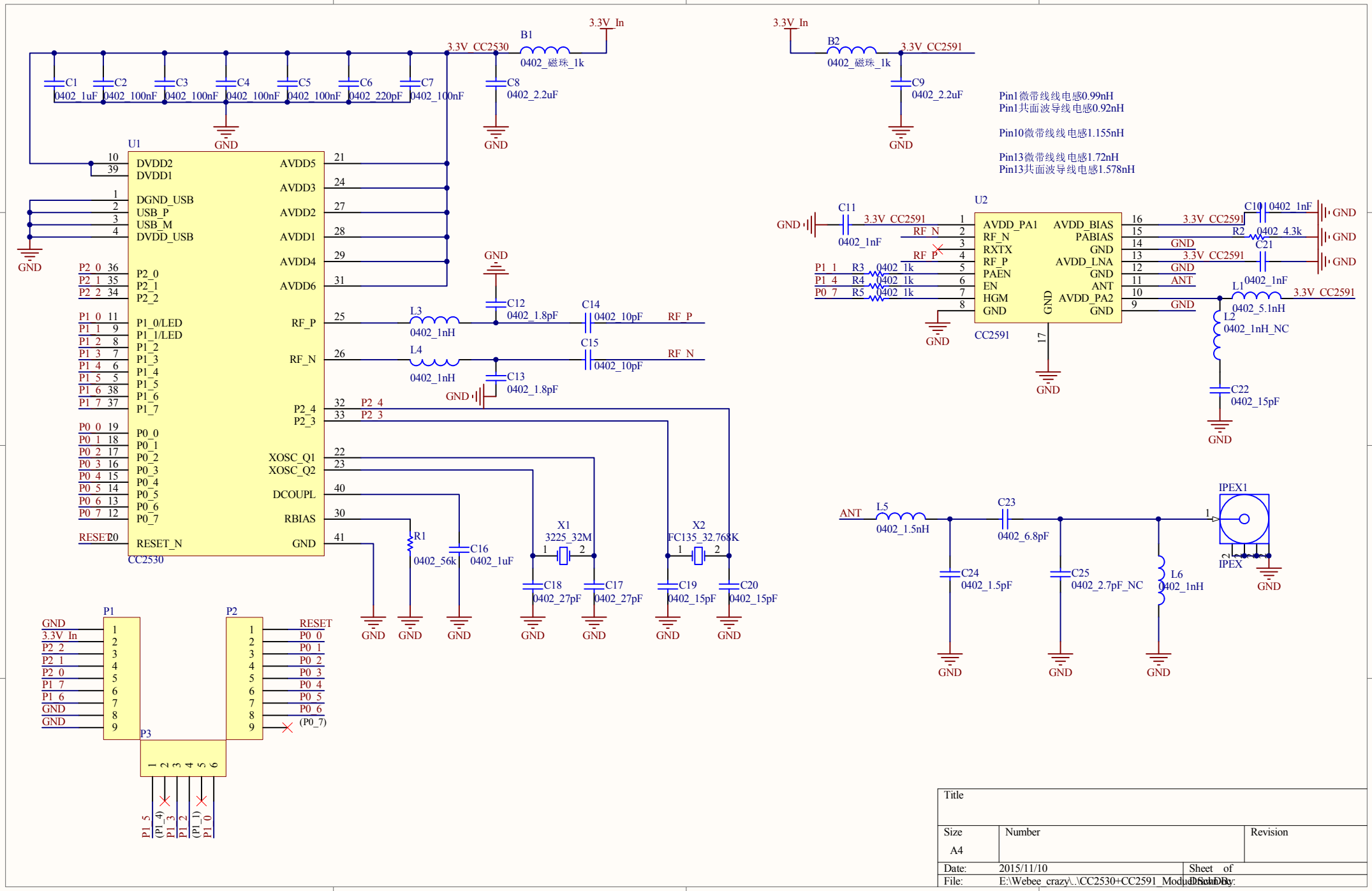

Title		
Size A4	Number	Revision
Date: 2015/11/10	Sheet of	
File: E:\Webee_crazy\..\CC2530+CC2591_Module.SchDoc	Drawn By:	