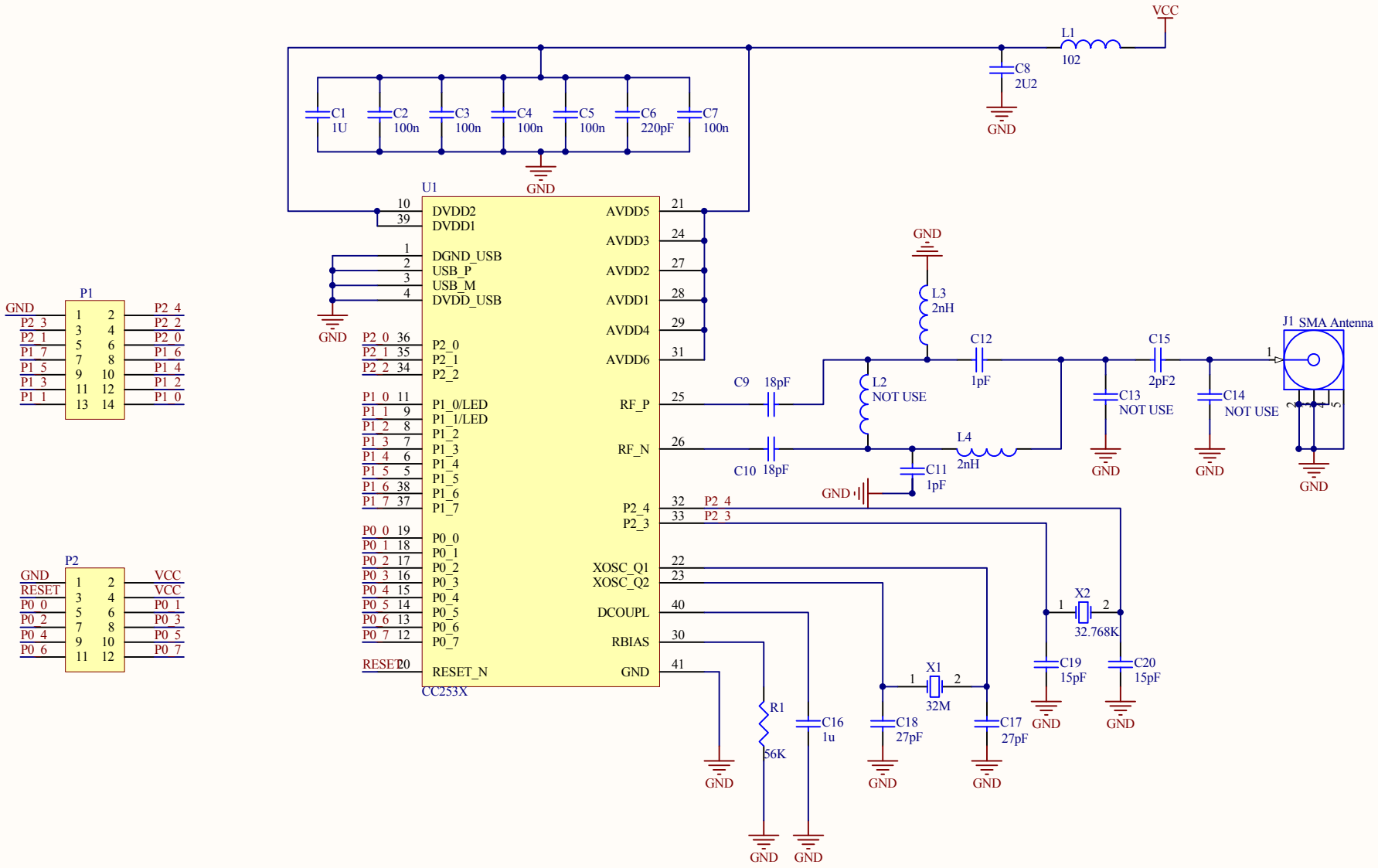

Title		
Size A4	Number	Revision
Date: 2015/11/10		Sheet of
File: E:\Webee_crazy\..\CC2530_Core.SchDoc		Drawn By: