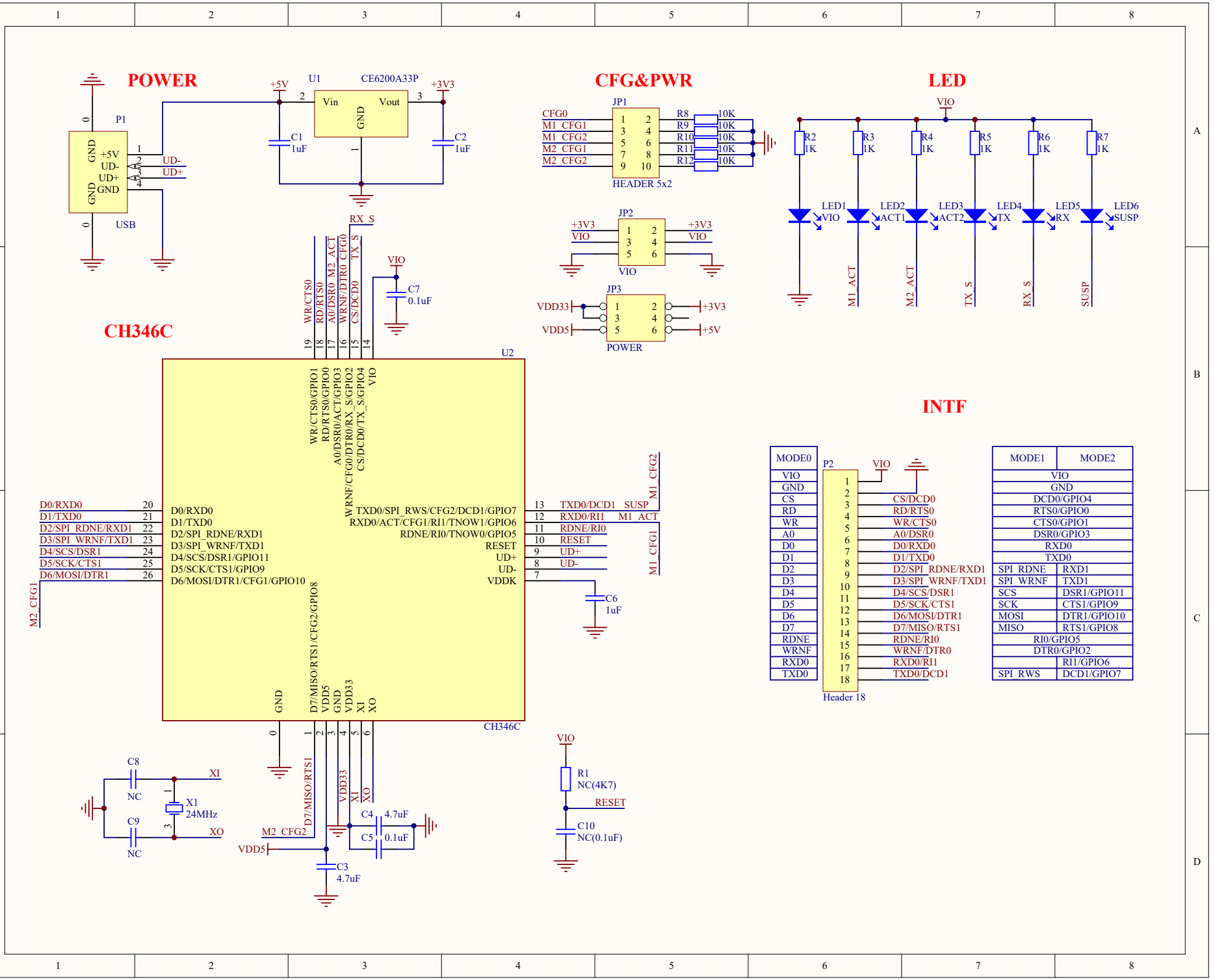
POWER
P1
GND
+5V
UD-
UD+
GND
USB
U1
CE6200A33P
Vin
Vout
GND
+5V
+3V3
C1
1uF
C2
1uF
CFG&PWR
JP1
CFG0
M1_CFG1
M1_CFG2
M2_CFG1
M2_CFG2
R8
R9
R10
R11
R12
10K
HEADER 5x2
JP2
+3V3
VIO
JP3
VDD33
VDD5
POWER
LED
VIO
R2 1K
R3 1K
R4 1K
R5 1K
R6 1K
R7 1K
LED1 VIO
LED2 ACT1
LED3 ACT2
LED4 TX
LED5 RX
LED6 SUSP
M1_ACT
M2_ACT
TX_S
RX_S
SUSP
CH346C
U2
RX_S
TX_S
WR/CTS0
RD/RTS0
A0/DSR0
M2_ACT
WRNF/DTR0
CFG0
CS/DCD0
VIO
C7
0.1uF
WR/CTS0/GPIO1
RD/RTS0/GPIO0
A0/DSR0/ACT/GPIO3
WRNF/CFG0/DTR0/RX_S/GPIO2
CS/DCD0/TX_S/GPIO4
D0/RXD0
D1/TXD0
D2/SPI_RDNE/RXD1
D3/SPI_WRNF/TXD1
D4/SCS/DSR1
D5/SCK/CTS1
D6/MOSI/DTR1
M2_CFG1
D0/RXD0
D1/TXD0
D2/SPI_RDNE/RXD1
D3/SPI_WRNF/TXD1
D4/SCS/DSR1/GPIO11
D5/SCK/CTS1/GPIO9
D6/MOSI/DTR1/CFG1/GPIO10
TXD0/SPI_RWS/CFG2/DCD1/GPIO7
RXD0/ACT/CFG1/RI1/TNOW1/GPIO6
RDNE/RI0/TNOW0/GPIO5
RESET
UD+
UD-
VDDK
TXD0/DCD1
RXD0/RI1
RDNE/RI0
RESET
UD+
UD-
M1_CFG2
M1_ACT
M1_CFG1
SUSP
C6
1uF
GND
D7/MISO/RTS1/CFG2/GPIO8
VDD5
GND
VDD33
XI
XO
CH346C
C8
NC
C9
NC
X1
24MHz
XI
XO
M2_CFG2
VDD5
C3
4.7uF
C4
4.7uF
C5
0.1uF
VIO
R1
NC(4K7)
RESET
C10
NC(0.1uF)
INTF
MODE0
VIO
GND
CS
RD
WR
A0
D0
D1
D2
D3
D4
D5
D6
D7
RDNE
WRNF
RXD0
TXD0
P2
Header 18
CS/DCD0
RD/RTS0
WR/CTS0
A0/DSR0
D0/RXD0
D1/TXD0
D2/SPI_RDNE/RXD1
D3/SPI_WRNF/TXD1
D4/SCS/DSR1
D5/SCK/CTS1
D6/MOSI/DTR1
D7/MISO/RTS1
RDNE/RI0
WRNF/DTR0
RXD0/RI1
TXD0/DCD1
MODE1 MODE2
VIO
GND
DCD0/GPIO4
RTS0/GPIO0
CTS0/GPIO1
DSR0/GPIO3
RXD0
TXD0
SPI_RDNE RXD1
SPI_WRNF TXD1
SCS DSR1/GPIO11
SCK CTS1/GPIO9
MOSI DTR1/GPIO10
MISO RTS1/GPIO8
RI0/GPIO5
DTR0/GPIO2
RI1/GPIO6
SPI_RWS DCD1/GPIO7