POWER
POWER.SchDoc
5V
USB_LINK
USBPD
USB3.0
3V3
1V2
OTG
Link
LINK.SchDoc
5V
USB_LINK
LINK
3V3
QSPI
QSPI.SchDoc
QSPI
3V3
SDRAM
SDRAM.SchDoc
SDRAM
3V3
LCD
LCD.SchDoc
5V
LCD_LTDC
TOUCH_INT
TOUCH_RST
LCD_TOUCH_IIC
3V3
DVP
DVP.SchDoc
DVP_RST
DVP_PWDN
DVP
3V3
U_MCU
IOS.SchDoc
USBPD
USB3.0
3V3
1V2
OTG
LINK
QSPI
SDRAM
LTDC
TOUCH_INT
TOUCH_RST
IIC
DVP_RST
DVP_PWDN
DVP
VIO_1.8
SDMMC
ETH
LED0
LED1
SAI
PIOC
SERDES
HSADC
I3C
DFSDM
CAN
eMMC
eMMC.SchDoc
VIO_1.8
eMMC
3V3
ETH
ETH.SchDoc
3V3
ETH
LED0
LED1
SAI
SAI.SchDoc
SAI
3V3
GPIO_OUT
GPIO_OUT.SchDoc
PIOC
SERDES
HSADC
I3C
I3C.SchDoc
I3C
3V3
DFSDM
DFSDM.SchDoc
DFSDM
3V3
CAN
CAN.SchDoc
CAN
5V

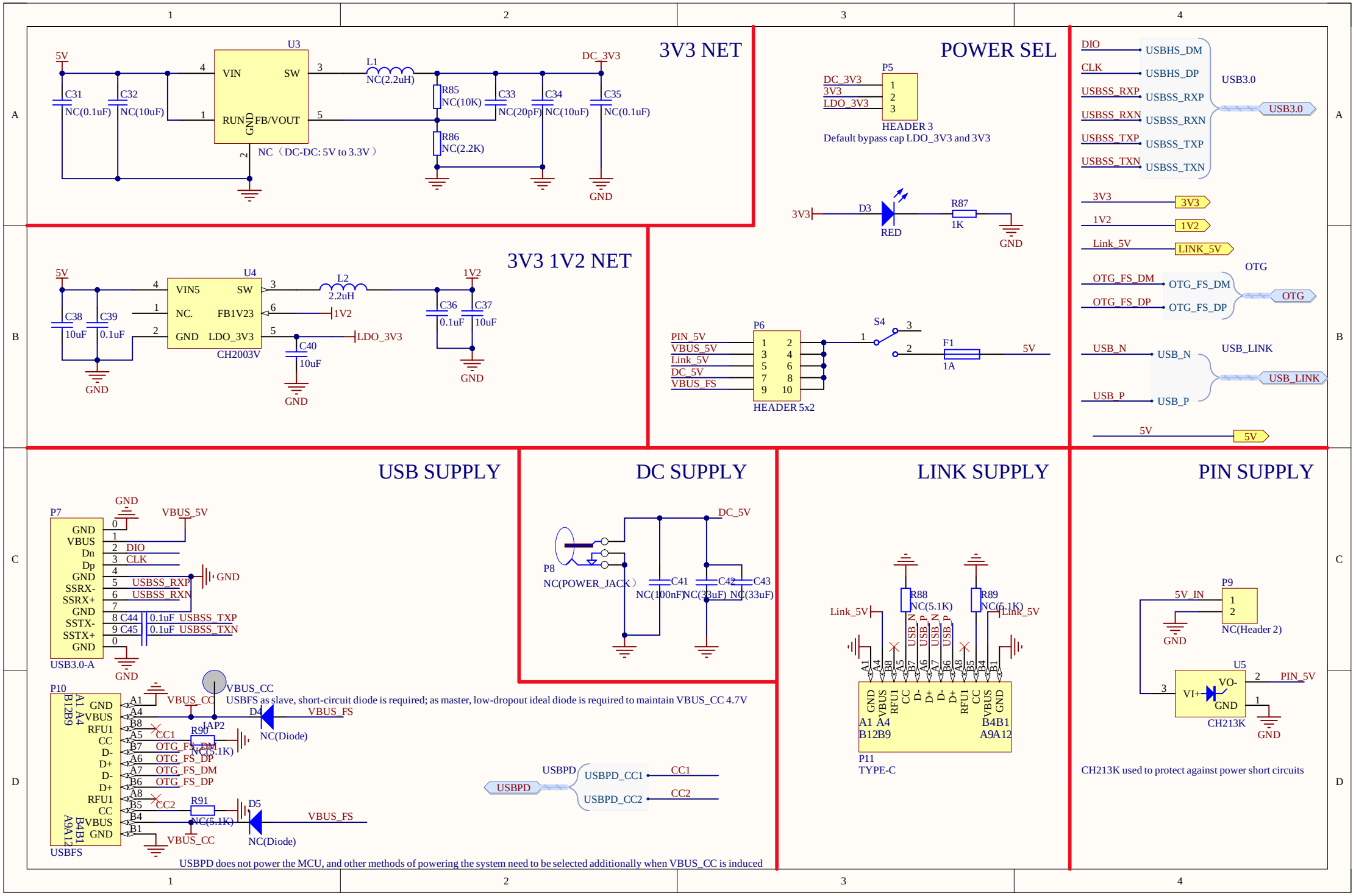
3V3 NET
U3
5V
VIN
SW
RUN
FB/VOUT
GND
C31
NC(0.1uF)
C32
NC(10uF)
L1
NC(2.2uH)
R85
NC(10K)
R86
NC(2.2K)
C33
NC(20pF)
C34
NC(10uF)
C35
NC(0.1uF)
DC_3V3
NC（DC-DC: 5V to 3.3V）
GND
POWER SEL
P5
DC_3V3
3V3
LDO_3V3
HEADER 3
Default bypass cap LDO_3V3 and 3V3
D3
RED
R87
1K
3V3 1V2 NET
U4
VIN5
SW
NC.
FB1V23
GND
LDO_3V3
CH2003V
C38
10uF
C39
0.1uF
L2
2.2uH
1V2
C36
0.1uF
C37
10uF
C40
10uF
LDO_3V3
P6
PIN_5V
VBUS_5V
Link_5V
DC_5V
VBUS_FS
HEADER 5x2
S4
F1
1A
5V
DIO
CLK
USBSS_RXP
USBSS_RXN
USBSS_TXP
USBSS_TXN
USBHS_DM
USBHS_DP
USB3.0
3V3
1V2
Link_5V
LINK_5V
OTG
OTG_FS_DM
OTG_FS_DP
USB_N
USB_P
USB_LINK
USB SUPPLY
P7
USB3.0-A
GND
VBUS_5V
DIO
CLK
USBSS_RXP
USBSS_RXN
C44
0.1uF
USBSS_TXP
C45
0.1uF
USBSS_TXN
P10
USBFS
VBUS_CC
CC1
CC2
R90
NC(5.1K)
R91
NC(5.1K)
D4
D5
NC(Diode)
VBUS_FS
USBFS as slave, short-circuit diode is required; as master, low-dropout ideal diode is required to maintain VBUS_CC 4.7V
USBPD
USBPD_CC1
USBPD_CC2
USBPD does not power the MCU, and other methods of powering the system need to be selected additionally when VBUS_CC is induced
DC SUPPLY
P8
NC(POWER_JACK）
DC_5V
C41
NC(100nF)
C42
NC(33uF)
C43
NC(33uF)
LINK SUPPLY
Link_5V
R88
NC(5.1K)
R89
NC(5.1K)
P11
TYPE-C
PIN SUPPLY
P9
5V_IN
NC(Header 2)
U5
VI+
VO-
GND
PIN_5V
CH213K
CH213K used to protect against power short circuits

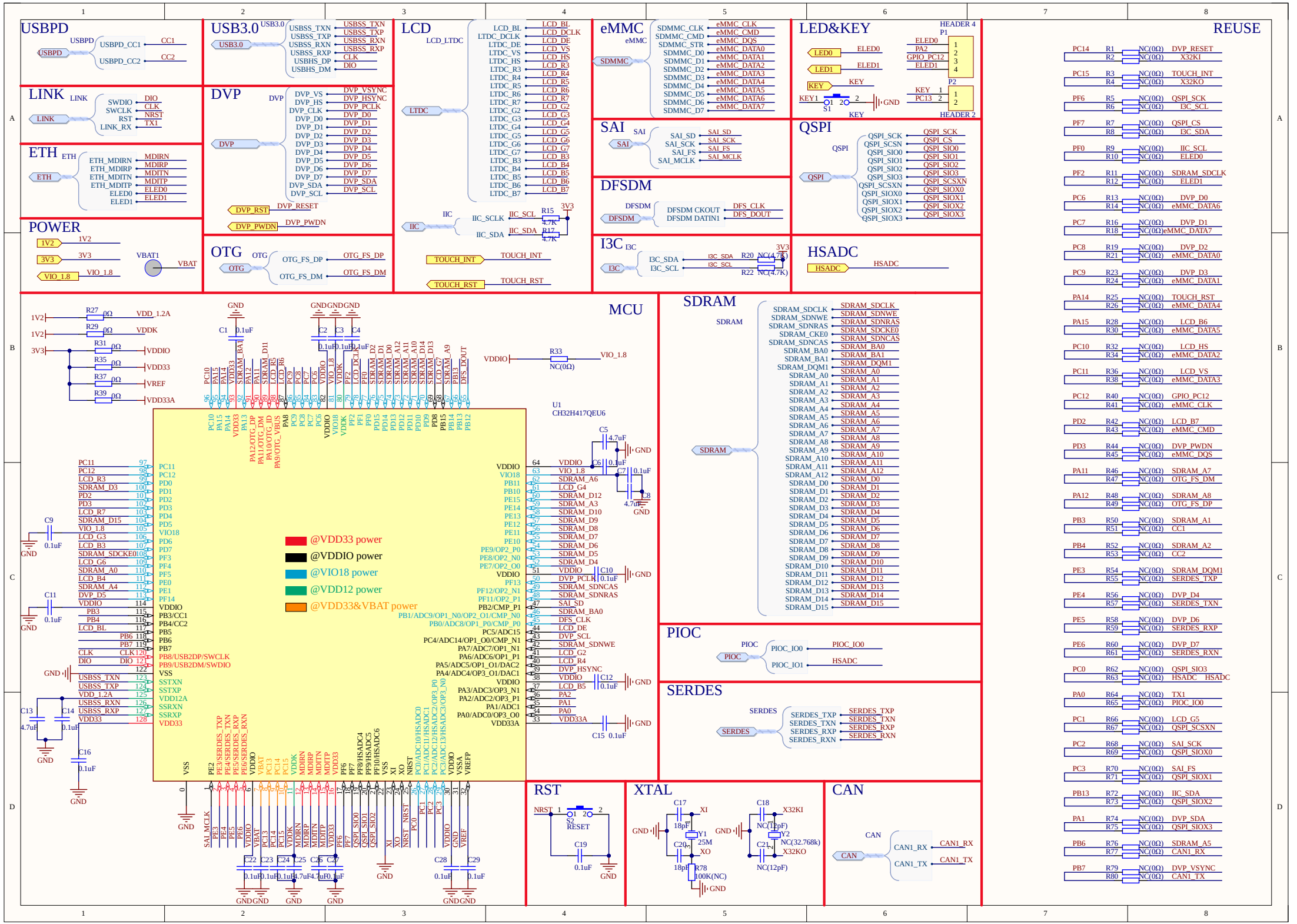
USBPD
USBPD_CC1
USBPD_CC2
CC1
CC2
USB3.0
USBSS_TXN
USBSS_TXP
USBSS_RXN
USBSS_RXP
USBHS_DP
USBHS_DM
CLK
DIO
LINK
SWDIO
SWCLK
RST
LINK_RX
NRST
TX1
DVP
DVP_VS
DVP_HS
DVP_CLK
DVP_D0
DVP_D1
DVP_D2
DVP_D3
DVP_D4
DVP_D5
DVP_D6
DVP_D7
DVP_SDA
DVP_SCL
DVP_VSYNC
DVP_HSYNC
DVP_PCLK
DVP_RST
DVP_RESET
DVP_PWDN
ETH
ETH_MDIRN
ETH_MDIRP
ETH_MDITN
ETH_MDITP
ELED0
ELED1
MDIRN
MDIRP
MDITN
MDITP
POWER
1V2
3V3
VIO_1.8
VBAT1
VBAT
OTG
OTG_FS_DP
OTG_FS_DM
LCD
LCD_LTDC
LTDC
LCD_BL
LTDC_DCLK
LCD_DCLK
LTDC_DE
LCD_DE
LTDC_VS
LCD_VS
LTDC_HS
LCD_HS
LTDC_R3
LCD_R3
LTDC_R4
LCD_R4
LTDC_R5
LCD_R5
LTDC_R6
LCD_R6
LTDC_R7
LCD_R7
LTDC_G2
LCD_G2
LTDC_G3
LCD_G3
LTDC_G4
LCD_G4
LTDC_G5
LCD_G5
LTDC_G6
LCD_G6
LTDC_G7
LCD_G7
LTDC_B3
LCD_B3
LTDC_B4
LCD_B4
LTDC_B5
LCD_B5
LTDC_B6
LCD_B6
LTDC_B7
LCD_B7
IIC
IIC_SCLK
IIC_SDA
IIC_SCL
R15
4.7K
R17
4.7K
3V3
TOUCH_INT
TOUCH_RST
eMMC
SDMMC
SDMMC_CLK
SDMMC_CMD
SDMMC_STR
SDMMC_D0
SDMMC_D1
SDMMC_D2
SDMMC_D3
SDMMC_D4
SDMMC_D5
SDMMC_D6
SDMMC_D7
eMMC_CLK
eMMC_CMD
eMMC_DQS
eMMC_DATA0
eMMC_DATA1
eMMC_DATA2
eMMC_DATA3
eMMC_DATA4
eMMC_DATA5
eMMC_DATA6
eMMC_DATA7
LED&KEY
LED0
LED1
KEY
KEY1
S1
GND
HEADER 4
P1
ELED0
PA2
GPIO_PC12
ELED1
HEADER 2
P2
PC13
SAI
SAI_SD
SAI_SCK
SAI_FS
SAI_MCLK
QSPI
QSPI_SCK
QSPI_CS
QSPI_SCSN
QSPI_SIO0
QSPI_SIO1
QSPI_SIO2
QSPI_SIO3
QSPI_SCSXN
QSPI_SIOX0
QSPI_SIOX1
QSPI_SIOX2
QSPI_SIOX3
DFSDM
DFSDM CKOUT
DFSDM DATIN1
DFS_CLK
DFS_DOUT
I3C
I3C_SDA
I3C_SCL
R20
NC(4.7K)
R22
NC(4.7K)
HSADC
REUSE
PC14 R1 NC(0Ω) DVP_RESET
R2 NC(0Ω) X32KI
PC15 R3 NC(0Ω) TOUCH_INT
R4 NC(0Ω) X32KO
PF6 R5 NC(0Ω) QSPI_SCK
R6 NC(0Ω) I3C_SCL
PF7 R7 NC(0Ω) QSPI_CS
R8 NC(0Ω) I3C_SDA
PF0 R9 NC(0Ω) IIC_SCL
R10 NC(0Ω) ELED0
PF2 R11 NC(0Ω) SDRAM_SDCLK
R12 NC(0Ω) ELED1
PC6 R13 NC(0Ω) DVP_D0
R14 NC(0Ω) eMMC_DATA6
PC7 R16 NC(0Ω) DVP_D1
R18 NC(0Ω) eMMC_DATA7
PC8 R19 NC(0Ω) DVP_D2
R21 NC(0Ω) eMMC_DATA0
PC9 R23 NC(0Ω) DVP_D3
R24 NC(0Ω) eMMC_DATA1
PA14 R25 NC(0Ω) TOUCH_RST
R26 NC(0Ω) eMMC_DATA4
PA15 R28 NC(0Ω) LCD_B6
R30 NC(0Ω) eMMC_DATA5
PC10 R32 NC(0Ω) LCD_HS
R34 NC(0Ω) eMMC_DATA2
PC11 R36 NC(0Ω) LCD_VS
R38 NC(0Ω) eMMC_DATA3
PC12 R40 NC(0Ω) GPIO_PC12
R41 NC(0Ω) eMMC_CLK
PD2 R42 NC(0Ω) LCD_B7
R43 NC(0Ω) eMMC_CMD
PD3 R44 NC(0Ω) DVP_PWDN
R45 NC(0Ω) eMMC_DQS
PA11 R46 NC(0Ω) SDRAM_A7
R47 NC(0Ω) OTG_FS_DM
PA12 R48 NC(0Ω) SDRAM_A8
R49 NC(0Ω) OTG_FS_DP
PB3 R50 NC(0Ω) SDRAM_A1
R51 NC(0Ω) CC1
PB4 R52 NC(0Ω) SDRAM_A2
R53 NC(0Ω) CC2
PE3 R54 NC(0Ω) SDRAM_DQM1
R55 NC(0Ω) SERDES_TXP
PE4 R56 NC(0Ω) DVP_D4
R57 NC(0Ω) SERDES_TXN
PE5 R58 NC(0Ω) DVP_D6
R59 NC(0Ω) SERDES_RXP
PE6 R60 NC(0Ω) DVP_D7
R61 NC(0Ω) SERDES_RXN
PC0 R62 NC(0Ω) QSPI_SIO3
R63 NC(0Ω) HSADC HSADC
PA0 R64 NC(0Ω) TX1
R65 NC(0Ω) PIOC_IO0
PC1 R66 NC(0Ω) LCD_G5
R67 NC(0Ω) QSPI_SCSXN
PC2 R68 NC(0Ω) SAI_SCK
R69 NC(0Ω) QSPI_SIOX0
PC3 R70 NC(0Ω) SAI_FS
R71 NC(0Ω) QSPI_SIOX1
PB13 R72 NC(0Ω) IIC_SDA
R73 NC(0Ω) QSPI_SIOX2
PA1 R74 NC(0Ω) DVP_SDA
R75 NC(0Ω) QSPI_SIOX3
PB6 R76 NC(0Ω) SDRAM_A5
R77 NC(0Ω) CAN1_RX
PB7 R79 NC(0Ω) DVP_VSYNC
R80 NC(0Ω) CAN1_TX
MCU
U1
CH32H417QEU6
@VDD33 power
@VDDIO power
@VIO18 power
@VDD12 power
@VDD33&VBAT power
SDRAM
SDRAM_SDCLK
SDRAM_SDNWE
SDRAM_SDNRAS
SDRAM_SDCKE0
SDRAM_SDNCAS
SDRAM_BA0
SDRAM_BA1
SDRAM_DQM1
SDRAM_A0
SDRAM_A1
SDRAM_A2
SDRAM_A3
SDRAM_A4
SDRAM_A5
SDRAM_A6
SDRAM_A7
SDRAM_A8
SDRAM_A9
SDRAM_A10
SDRAM_A11
SDRAM_A12
SDRAM_D0
SDRAM_D1
SDRAM_D2
SDRAM_D3
SDRAM_D4
SDRAM_D5
SDRAM_D6
SDRAM_D7
SDRAM_D8
SDRAM_D9
SDRAM_D10
SDRAM_D11
SDRAM_D12
SDRAM_D13
SDRAM_D14
SDRAM_D15
PIOC
PIOC_IO0
PIOC_IO1
HSADC
SERDES
SERDES_TXP
SERDES_TXN
SERDES_RXP
SERDES_RXN
RST
NRST
S2
RESET
C19
0.1uF
XTAL
C17
18pF
XI
Y1
25M
C20
18pF
XO
R78
100K(NC)
C18
NC(12pF)
X32KI
Y2
NC(32.768k)
C21
NC(12pF)
X32KO
CAN
CAN1_RX
CAN1_TX

LINK

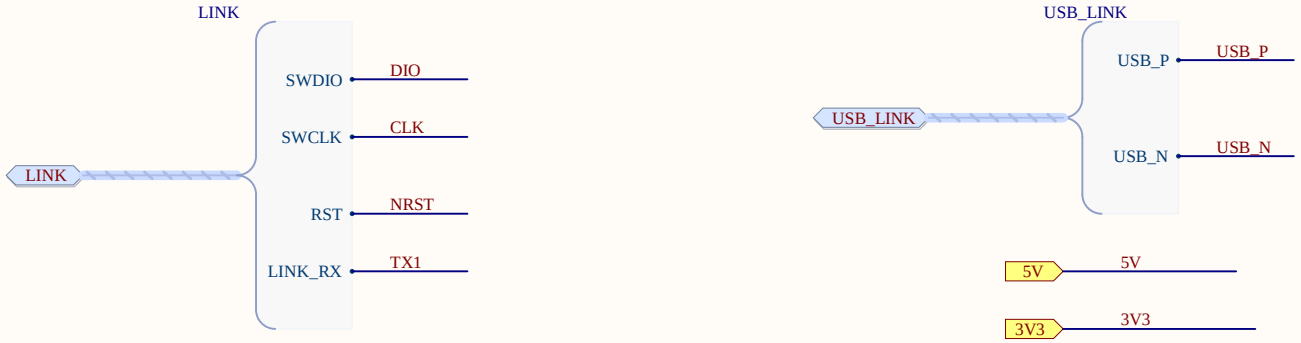

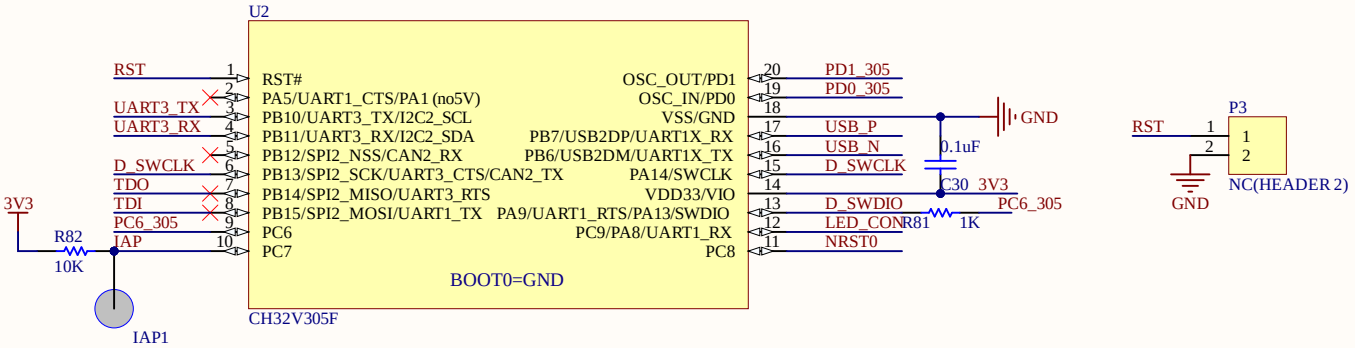

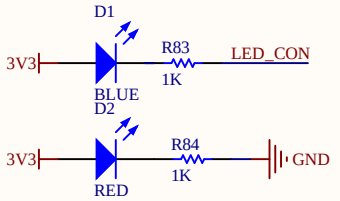

Blue light on -ARM Mode
Blue light off-Risc-V Mode

QSPI

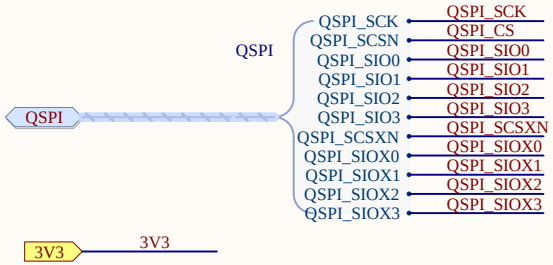
QSPI
QSPI
QSPI_SCK
QSPI_SCSN
QSPI_SIO0
QSPI_SIO1
QSPI_SIO2
QSPI_SIO3
QSPI_SCSXN
QSPI_SIOX0
QSPI_SIOX1
QSPI_SIOX2
QSPI_SIOX3
QSPI_SCK
QSPI_CS
QSPI_SIO0
QSPI_SIO1
QSPI_SIO2
QSPI_SIO3
QSPI_SCSXN
QSPI_SIOX0
QSPI_SIOX1
QSPI_SIOX2
QSPI_SIOX3
3V3
3V3

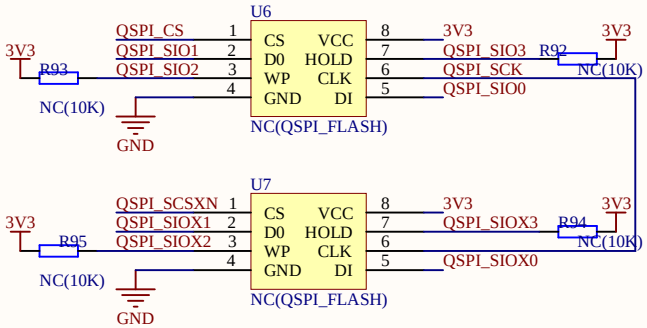
U6
QSPI_CS 1
QSPI_SIO1 2
QSPI_SIO2 3
4
CS VCC
D0 HOLD
WP CLK
GND DI
8
7
6
5
3V3
QSPI_SIO3
QSPI_SCK
QSPI_SIO0
3V3
R92
NC(10K)
3V3
R93
NC(10K)
GND
NC(QSPI_FLASH)
U7
QSPI_SCSXN 1
QSPI_SIOX1 2
QSPI_SIOX2 3
4
CS VCC
D0 HOLD
WP CLK
GND DI
8
7
6
5
3V3
QSPI_SIOX3
QSPI_SIOX0
3V3
R94
NC(10K)
3V3
R95
NC(10K)
GND
NC(QSPI_FLASH)

SDRAM

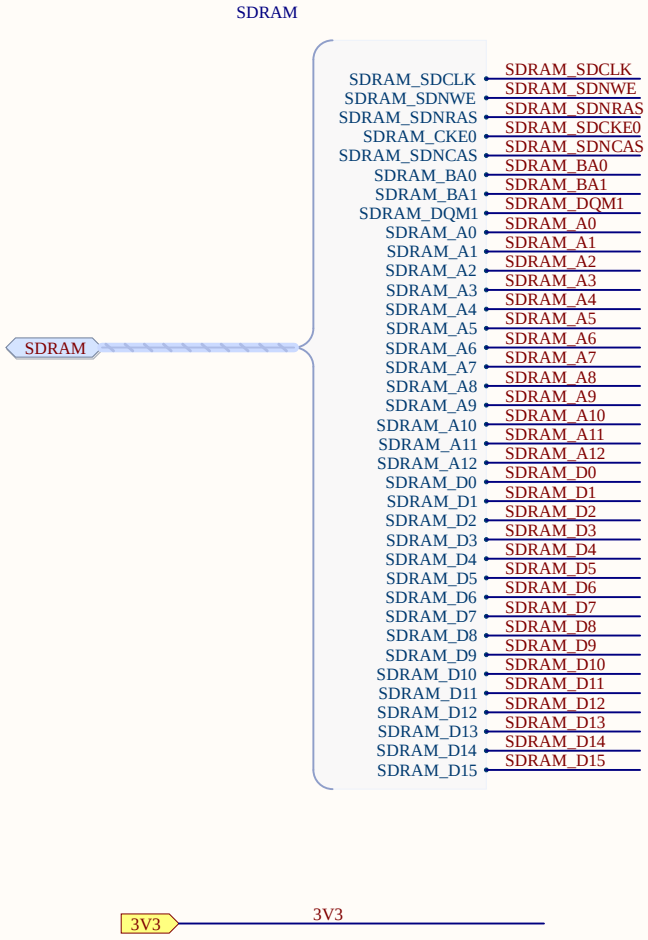
SDRAM
SDRAM
SDRAM_SDCLK
SDRAM_SDNWE
SDRAM_SDNRAS
SDRAM_CKE0
SDRAM_SDNCAS
SDRAM_BA0
SDRAM_BA1
SDRAM_DQM1
SDRAM_A0
SDRAM_A1
SDRAM_A2
SDRAM_A3
SDRAM_A4
SDRAM_A5
SDRAM_A6
SDRAM_A7
SDRAM_A8
SDRAM_A9
SDRAM_A10
SDRAM_A11
SDRAM_A12
SDRAM_D0
SDRAM_D1
SDRAM_D2
SDRAM_D3
SDRAM_D4
SDRAM_D5
SDRAM_D6
SDRAM_D7
SDRAM_D8
SDRAM_D9
SDRAM_D10
SDRAM_D11
SDRAM_D12
SDRAM_D13
SDRAM_D14
SDRAM_D15
3V3
3V3

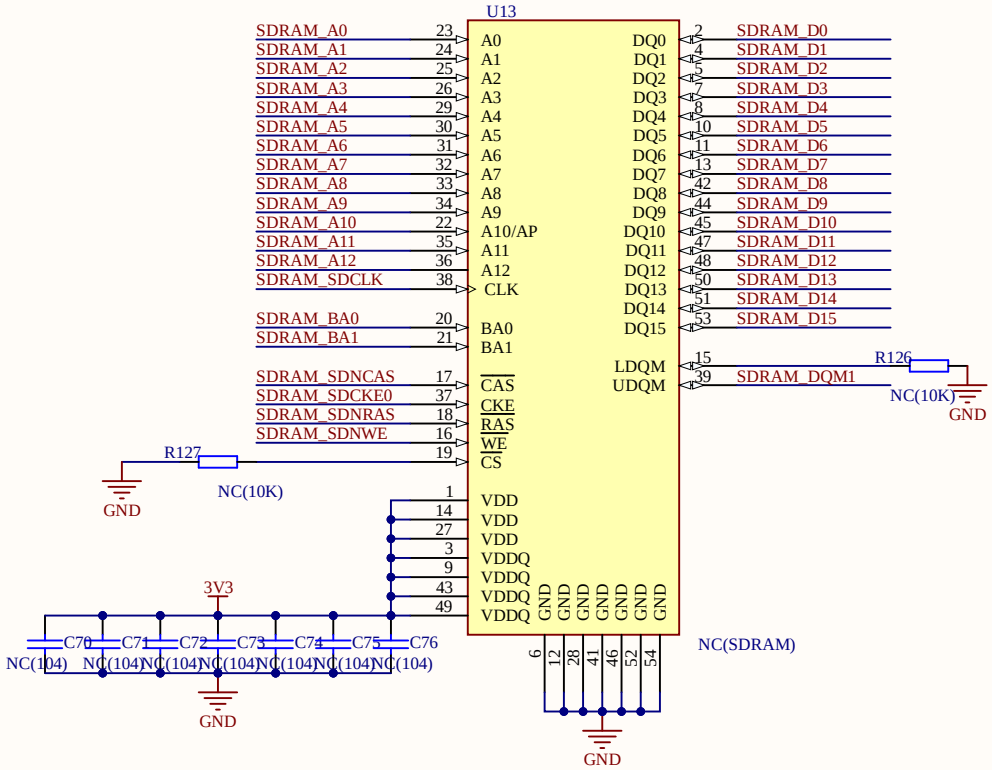
U13
SDRAM_A0 23 A0
SDRAM_A1 24 A1
SDRAM_A2 25 A2
SDRAM_A3 26 A3
SDRAM_A4 29 A4
SDRAM_A5 30 A5
SDRAM_A6 31 A6
SDRAM_A7 32 A7
SDRAM_A8 33 A8
SDRAM_A9 34 A9
SDRAM_A10 22 A10/AP
SDRAM_A11 35 A11
SDRAM_A12 36 A12
SDRAM_SDCLK 38 CLK
SDRAM_BA0 20 BA0
SDRAM_BA1 21 BA1
SDRAM_SDNCAS 17 CAS
SDRAM_SDCKE0 37 CKE
SDRAM_SDNRAS 18 RAS
SDRAM_SDNWE 16 WE
19 CS
1 VDD
14 VDD
27 VDD
3 VDDQ
9 VDDQ
43 VDDQ
49 VDDQ
DQ0 2 SDRAM_D0
DQ1 4 SDRAM_D1
DQ2 5 SDRAM_D2
DQ3 7 SDRAM_D3
DQ4 8 SDRAM_D4
DQ5 10 SDRAM_D5
DQ6 11 SDRAM_D6
DQ7 13 SDRAM_D7
DQ8 42 SDRAM_D8
DQ9 44 SDRAM_D9
DQ10 45 SDRAM_D10
DQ11 47 SDRAM_D11
DQ12 48 SDRAM_D12
DQ13 50 SDRAM_D13
DQ14 51 SDRAM_D14
DQ15 53 SDRAM_D15
LDQM 15
UDQM 39 SDRAM_DQM1
R126
NC(10K)
GND
R127
NC(10K)
GND
3V3
C70 NC(104)
C71 NC(104)
C72 NC(104)
C73 NC(104)
C74 NC(104)
C75 NC(104)
C76 NC(104)
GND
GND GND GND GND GND GND GND
6 12 28 41 46 52 54
GND
NC(SDRAM)

LCD

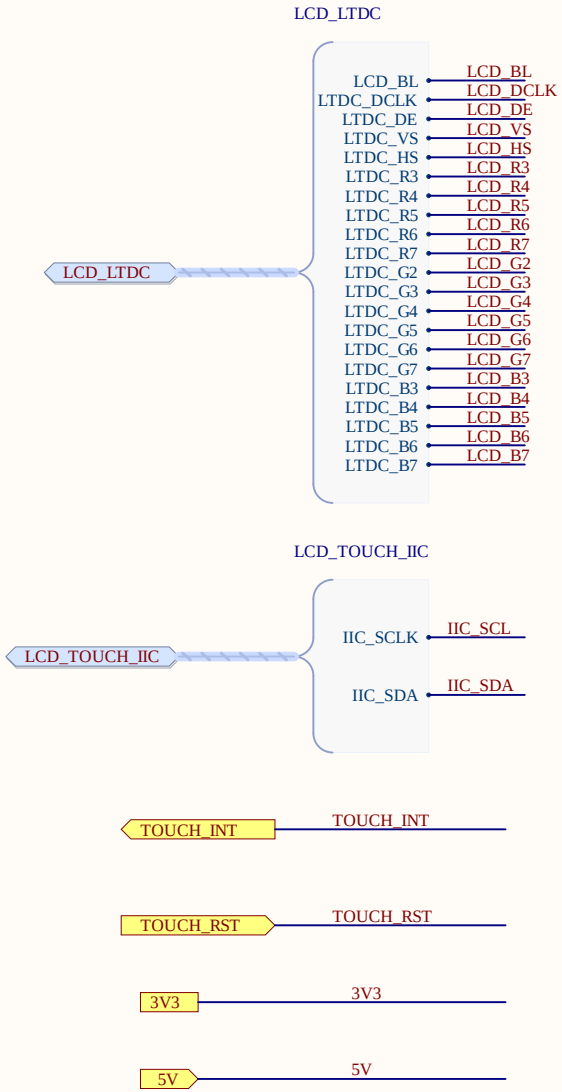
LCD_LTDC
LCD_LTDC
LCD_BL
LTDC_DCLK
LTDC_DE
LTDC_VS
LTDC_HS
LTDC_R3
LTDC_R4
LTDC_R5
LTDC_R6
LTDC_R7
LTDC_G2
LTDC_G3
LTDC_G4
LTDC_G5
LTDC_G6
LTDC_G7
LTDC_B3
LTDC_B4
LTDC_B5
LTDC_B6
LTDC_B7
LCD_BL
LCD_DCLK
LCD_DE
LCD_VS
LCD_HS
LCD_R3
LCD_R4
LCD_R5
LCD_R6
LCD_R7
LCD_G2
LCD_G3
LCD_G4
LCD_G5
LCD_G6
LCD_G7
LCD_B3
LCD_B4
LCD_B5
LCD_B6
LCD_B7
LCD_TOUCH_IIC
LCD_TOUCH_IIC
IIC_SCLK
IIC_SDA
IIC_SCL
IIC_SDA
TOUCH_INT
TOUCH_INT
TOUCH_RST
TOUCH_RST
3V3
3V3
5V
5V

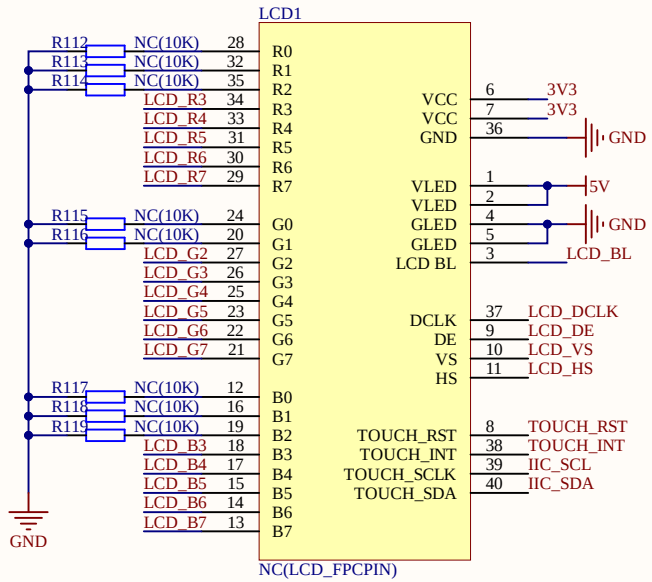
LCD1
R112 NC(10K) 28 R0
R113 NC(10K) 32 R1
R114 NC(10K) 35 R2
LCD_R3 34 R3
LCD_R4 33 R4
LCD_R5 31 R5
LCD_R6 30 R6
LCD_R7 29 R7
R115 NC(10K) 24 G0
R116 NC(10K) 20 G1
LCD_G2 27 G2
LCD_G3 26 G3
LCD_G4 25 G4
LCD_G5 23 G5
LCD_G6 22 G6
LCD_G7 21 G7
R117 NC(10K) 12 B0
R118 NC(10K) 16 B1
R119 NC(10K) 19 B2
LCD_B3 18 B3
LCD_B4 17 B4
LCD_B5 15 B5
LCD_B6 14 B6
LCD_B7 13 B7
GND
VCC 6 3V3
VCC 7 3V3
GND 36 GND
VLED 1 5V
VLED 2
GLED 4 GND
GLED 5
LCD BL 3 LCD_BL
DCLK 37 LCD_DCLK
DE 9 LCD_DE
VS 10 LCD_VS
HS 11 LCD_HS
TOUCH_RST 8 TOUCH_RST
TOUCH_INT 38 TOUCH_INT
TOUCH_SCLK 39 IIC_SCL
TOUCH_SDA 40 IIC_SDA
NC(LCD_FPCPIN)

eMMC

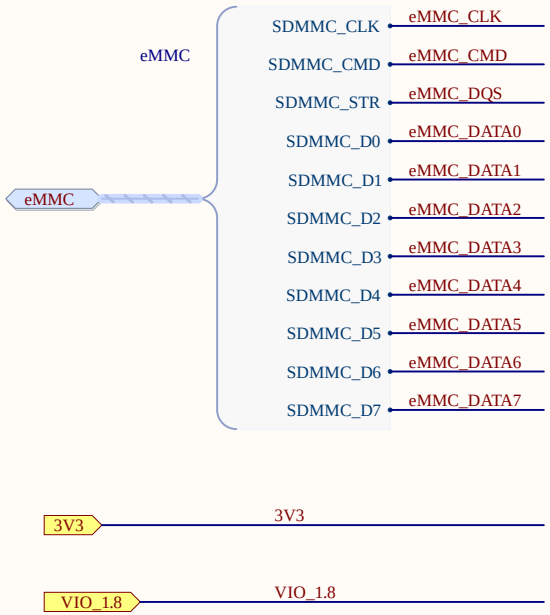
eMMC
eMMC
SDMMC_CLK
SDMMC_CMD
SDMMC_STR
SDMMC_D0
SDMMC_D1
SDMMC_D2
SDMMC_D3
SDMMC_D4
SDMMC_D5
SDMMC_D6
SDMMC_D7
eMMC_CLK
eMMC_CMD
eMMC_DQS
eMMC_DATA0
eMMC_DATA1
eMMC_DATA2
eMMC_DATA3
eMMC_DATA4
eMMC_DATA5
eMMC_DATA6
eMMC_DATA7
3V3
3V3
VIO_1.8
VIO_1.8

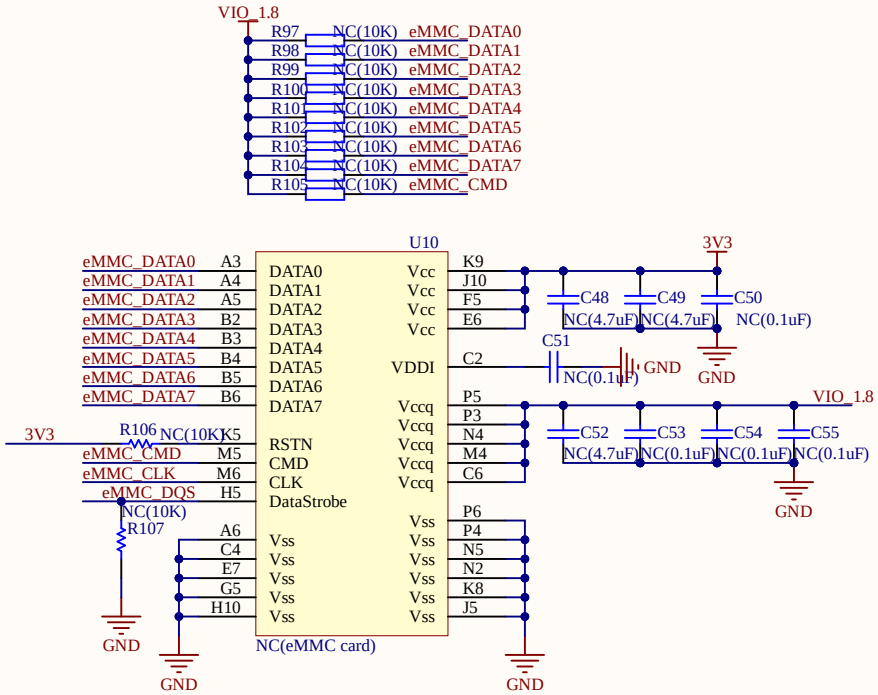
VIO_1.8
R97 NC(10K) eMMC_DATA0
R98 NC(10K) eMMC_DATA1
R99 NC(10K) eMMC_DATA2
R100 NC(10K) eMMC_DATA3
R101 NC(10K) eMMC_DATA4
R102 NC(10K) eMMC_DATA5
R103 NC(10K) eMMC_DATA6
R104 NC(10K) eMMC_DATA7
R105 NC(10K) eMMC_CMD
U10
3V3
eMMC_DATA0 A3 DATA0
eMMC_DATA1 A4 DATA1
eMMC_DATA2 A5 DATA2
eMMC_DATA3 B2 DATA3
eMMC_DATA4 B3 DATA4
eMMC_DATA5 B4 DATA5
eMMC_DATA6 B5 DATA6
eMMC_DATA7 B6 DATA7
3V3 R106 NC(10K) K5 RSTN
eMMC_CMD M5 CMD
eMMC_CLK M6 CLK
eMMC_DQS H5 DataStrobe
NC(10K) R107
A6 C4 E7 G5 H10 Vss
Vcc K9 J10 F5 E6
VDDI C2
Vccq P5 P3 N4 M4 C6
Vss P6 P4 N5 N2 K8 J5
C48 NC(4.7uF)
C49 NC(4.7uF)
C50 NC(0.1uF)
C51 NC(0.1uF)
GND
VIO_1.8
C52 NC(4.7uF)
C53 NC(0.1uF)
C54 NC(0.1uF)
C55 NC(0.1uF)
NC(eMMC card)

DVP

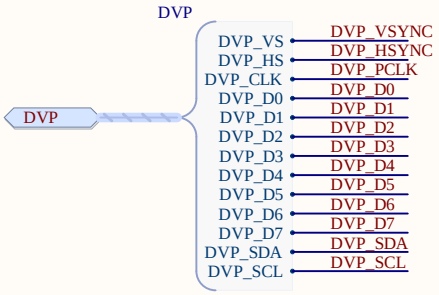
DVP
DVP
DVP_VS
DVP_HS
DVP_CLK
DVP_D0
DVP_D1
DVP_D2
DVP_D3
DVP_D4
DVP_D5
DVP_D6
DVP_D7
DVP_SDA
DVP_SCL
DVP_VSYNC
DVP_HSYNC
DVP_PCLK
DVP_D0
DVP_D1
DVP_D2
DVP_D3
DVP_D4
DVP_D5
DVP_D6
DVP_D7
DVP_SDA
DVP_SCL

DVP_RST
DVP_RESET

DVP_PWDN
DVP_PWDN

3V3
3V3

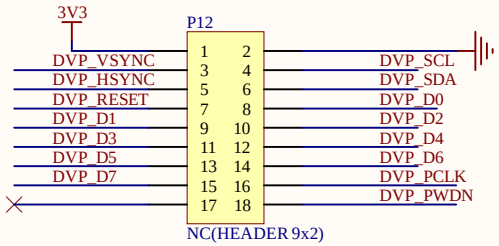
3V3
P12
DVP_VSYNC
DVP_HSYNC
DVP_RESET
DVP_D1
DVP_D3
DVP_D5
DVP_D7
1 2
3 4
5 6
7 8
9 10
11 12
13 14
15 16
17 18
DVP_SCL
DVP_SDA
DVP_D0
DVP_D2
DVP_D4
DVP_D6
DVP_PCLK
DVP_PWDN
NC(HEADER 9x2)

ETH

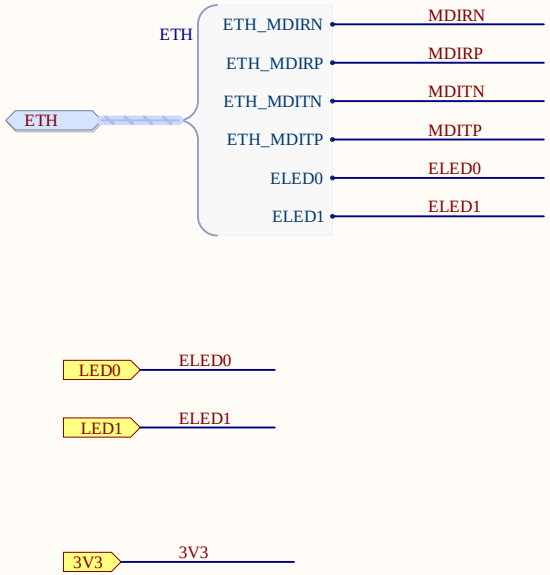
ETH
ETH
ETH_MDIRN
ETH_MDIRP
ETH_MDITN
ETH_MDITP
ELED0
ELED1
MDIRN
MDIRP
MDITN
MDITP
ELED0
ELED1
LED0
ELED0
LED1
ELED1
3V3
3V3

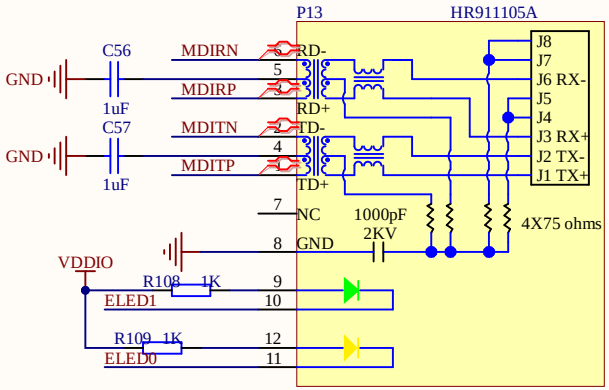
P13
HR911105A
GND
C56
1uF
GND
C57
1uF
MDIRN
MDIRP
MDITN
MDITP
RD-
RD+
TD-
TD+
NC
GND
1000pF
2KV
4X75 ohms
VDDIO
R108 1K
ELED1
R109 1K
ELED0
J8
J7
J6 RX-
J5
J4
J3 RX+
J2 TX-
J1 TX+

SAI

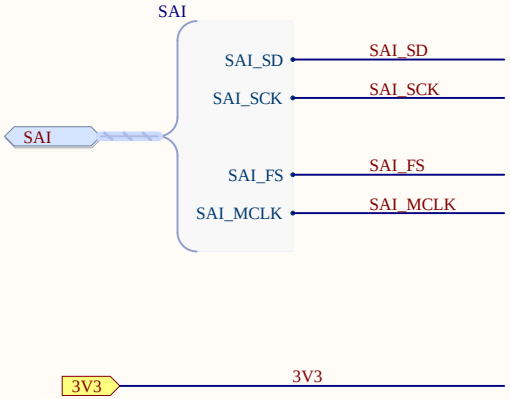
SAI
SAI
SAI_SD
SAI_SCK
SAI_FS
SAI_MCLK
SAI_SD
SAI_SCK
SAI_FS
SAI_MCLK
3V3
3V3

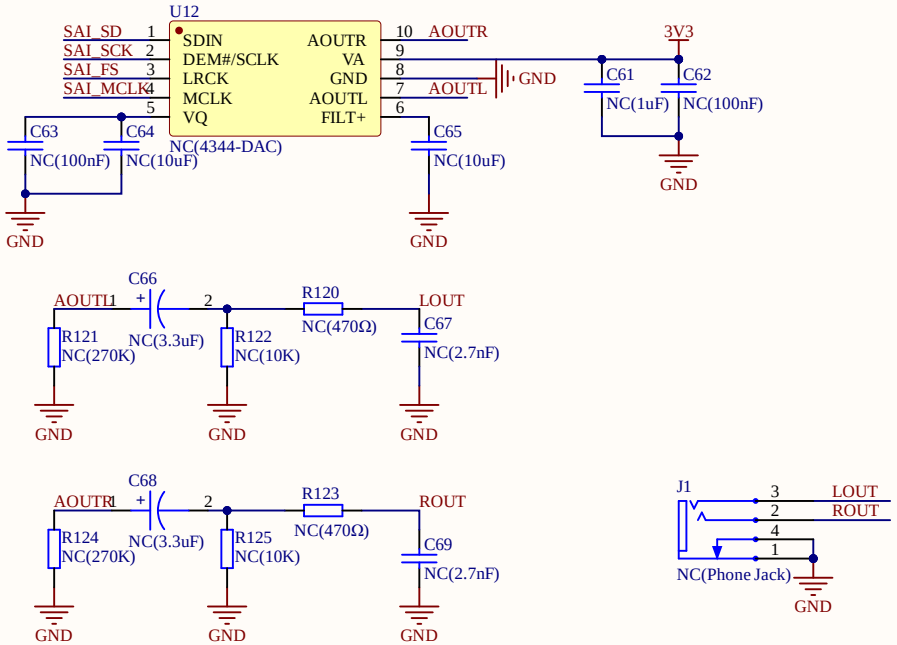
U12
SAI_SD 1
SAI_SCK 2
SAI_FS 3
SAI_MCLK 4
5
SDIN
DEM#/SCLK
LRCK
MCLK
VQ
AOUTR
VA
GND
AOUTL
FILT+
10 AOUTR
9
8
7 AOUTL
6
NC(4344-DAC)
GND
3V3
C61
NC(1uF)
C62
NC(100nF)
GND
C63
NC(100nF)
C64
NC(10uF)
C65
NC(10uF)
GND
GND
AOUTL 1
C66
NC(3.3uF)
2
R120
NC(470Ω)
LOUT
C67
NC(2.7nF)
R121
NC(270K)
R122
NC(10K)
GND
GND
GND
AOUTR 1
C68
NC(3.3uF)
2
R123
NC(470Ω)
ROUT
C69
NC(2.7nF)
R124
NC(270K)
R125
NC(10K)
GND
GND
GND
J1
3
2
4
1
LOUT
ROUT
NC(Phone Jack)
GND

I3C

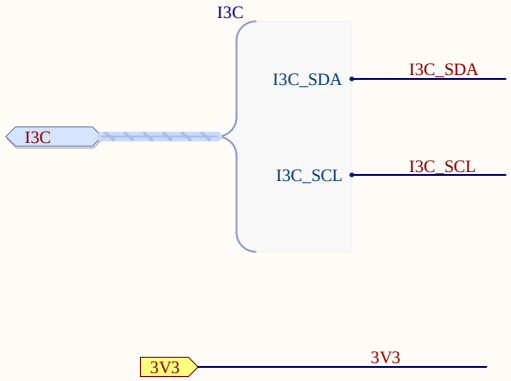
I3C
I3C
I3C_SDA
I3C_SCL
I3C_SDA
I3C_SCL
3V3
3V3

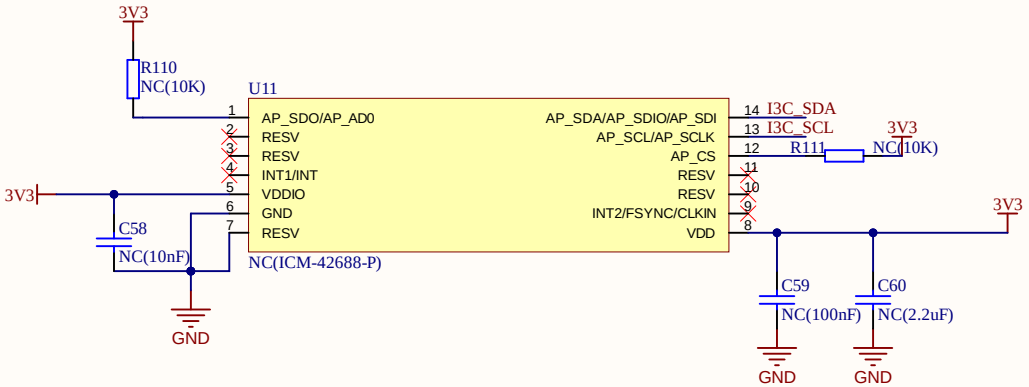
3V3
R110
NC(10K)
U11
1 AP_SDO/AP_AD0
2 RESV
3 RESV
4 INT1/INT
5 VDDIO
6 GND
7 RESV
AP_SDA/AP_SDIO/AP_SDI 14
AP_SCL/AP_SCLK 13
AP_CS 12
RESV 11
RESV 10
INT2/FSYNC/CLKIN 9
VDD 8
I3C_SDA
I3C_SCL
R111
3V3
NC(10K)
3V3
3V3
C58
NC(10nF)
NC(ICM-42688-P)
GND
C59
NC(100nF)
C60
NC(2.2uF)
GND
GND

DFSDM

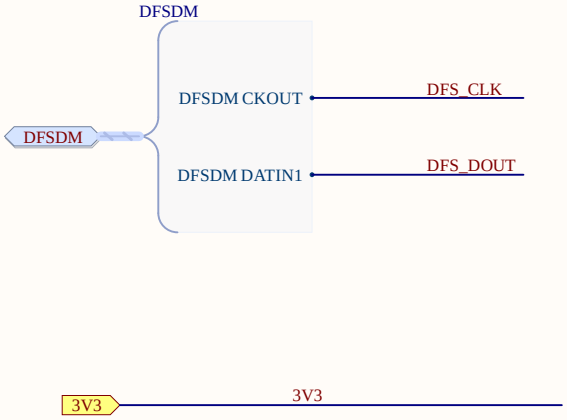
DFSDM
DFSDM
DFSDM CKOUT
DFSDM DATIN1
DFS_CLK
DFS_DOUT
3V3
3V3

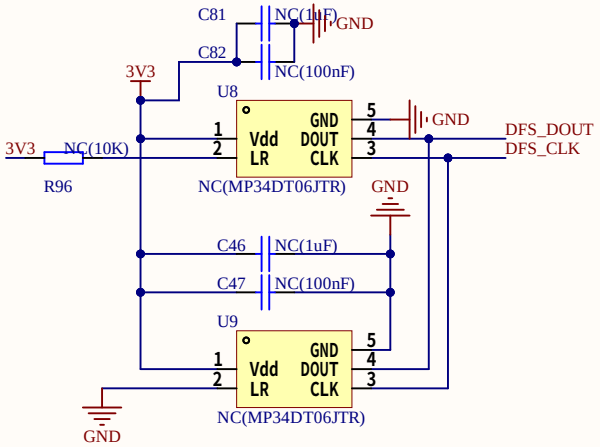
C81
NC(1uF)
GND
C82
NC(100nF)
3V3
U8
GND
DFS_DOUT
DFS_CLK
3V3
NC(10K)
R96
Vdd
LR
GND
DOUT
CLK
NC(MP34DT06JTR)
GND
C46
NC(1uF)
C47
NC(100nF)
U9
Vdd
LR
GND
DOUT
CLK
NC(MP34DT06JTR)
GND

CAN

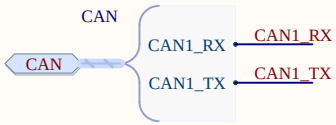
CAN
CAN
CAN1_RX
CAN1_TX
CAN1_RX
CAN1_TX

5V
5V

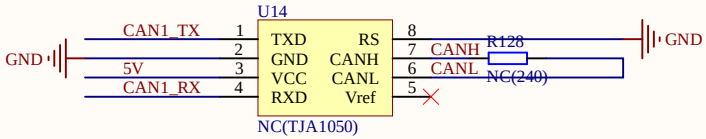
U14
GND
CAN1_TX
5V
CAN1_RX
1
2
3
4
TXD
GND
VCC
RXD
RS
CANH
CANL
Vref
8
7
6
5
CANH
CANL
R128
NC(240)
GND
NC(TJA1050)

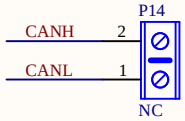
P14
CANH
CANL
2
1
NC

SERDES

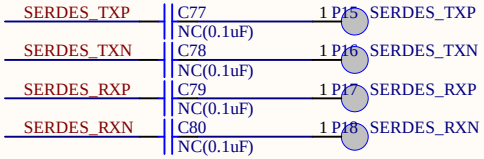

HSADC

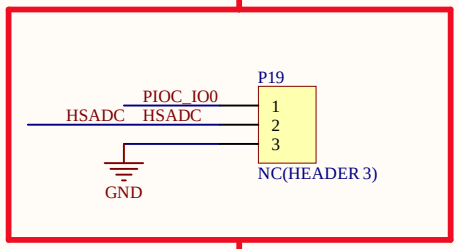

PIOC