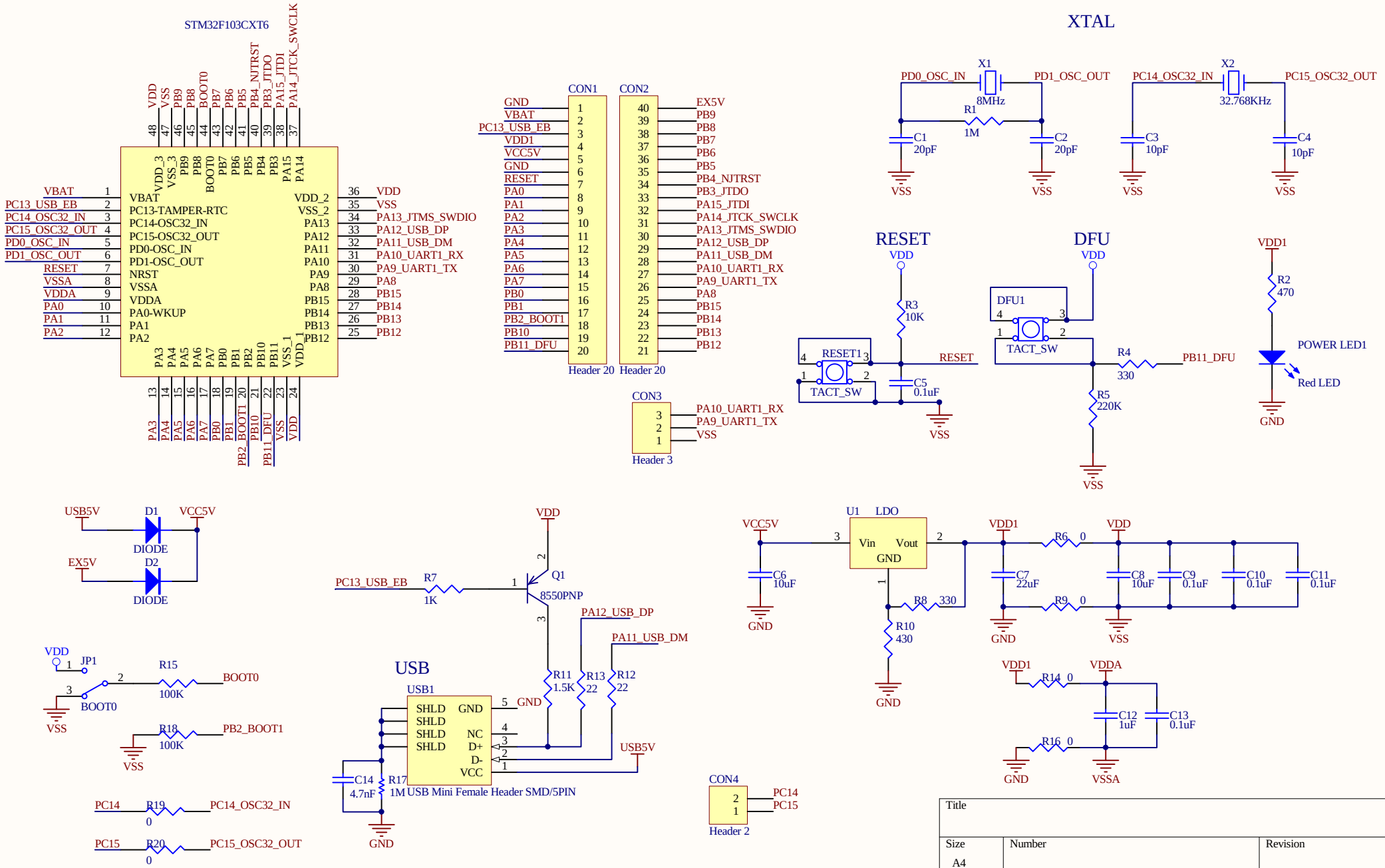
STM32F103CXT6
VBAT
PC13-TAMPER-RTC
PC14-OSC32_IN
PC15-OSC32_OUT
PD0-OSC_IN
PD1-OSC_OUT
NRST
VSSA
VDDA
PA0-WKUP
PA1
PA2
VDD_2
VSS_2
PA13
PA12
PA11
PA10
PA9
PA8
PB15
PB14
PB13
PB12
VDD_3
VSS_3
PB9
PB8
BOOT0
PB7
PB6
PB5
PB4
PB3
PA15
PA14
PA3
PA4
PA5
PA6
PA7
PB0
PB1
PB2_BOOT1
PB10
PB11_DFU
VSS_1
VDD_1
PA13_JTMS_SWDIO
PA12_USB_DP
PA11_USB_DM
PA10_UART1_RX
PA9_UART1_TX
PB4_NJTRST
PB3_JTDO
PA15_JTDI
PA14_JTCK_SWCLK
CON1
CON2
Header 20
Header 20
EX5V
PC13_USB_EB
CON3
Header 3
XTAL
X1
8MHz
X2
32.768KHz
PD0_OSC_IN
PD1_OSC_OUT
PC14_OSC32_IN
PC15_OSC32_OUT
R1
1M
C1
20pF
C2
20pF
C3
10pF
C4
10pF
VSS
RESET
VDD
R3
10K
RESET1
TACT_SW
C5
0.1uF
DFU
DFU1
R4
330
PB11_DFU
R5
220K
VDD1
R2
470
POWER LED1
Red LED
GND
USB5V
D1
VCC5V
DIODE
D2
Q1
8550PNP
R7
1K
PA12_USB_DP
PA11_USB_DM
USB
USB1
SHLD
GND
NC
D+
D-
VCC
R11
1.5K
R13
22
R12
22
USB5V
C14
4.7nF
R17
1M
USB Mini Female Header SMD/5PIN
JP1
R15
100K
BOOT0
R18
100K
PB2_BOOT1
PC14
R19
0
PC14_OSC32_IN
PC15
R20
0
PC15_OSC32_OUT
CON4
Header 2
U1
LDO
Vin
Vout
C6
10uF
R8
330
R10
430
R6
0
R9
0
C7
22uF
C8
10uF
C9
0.1uF
C10
0.1uF
C11
0.1uF
R14
0
R16
0
C12
1uF
C13
0.1uF
VDDA
VSSA
Title
Size
A4
Number
Revision
Date:
2012/9/14
Sheet of
File:
D:\AdvanceP\..\SmartIO_for_manual.SchDoc
Drawn By: