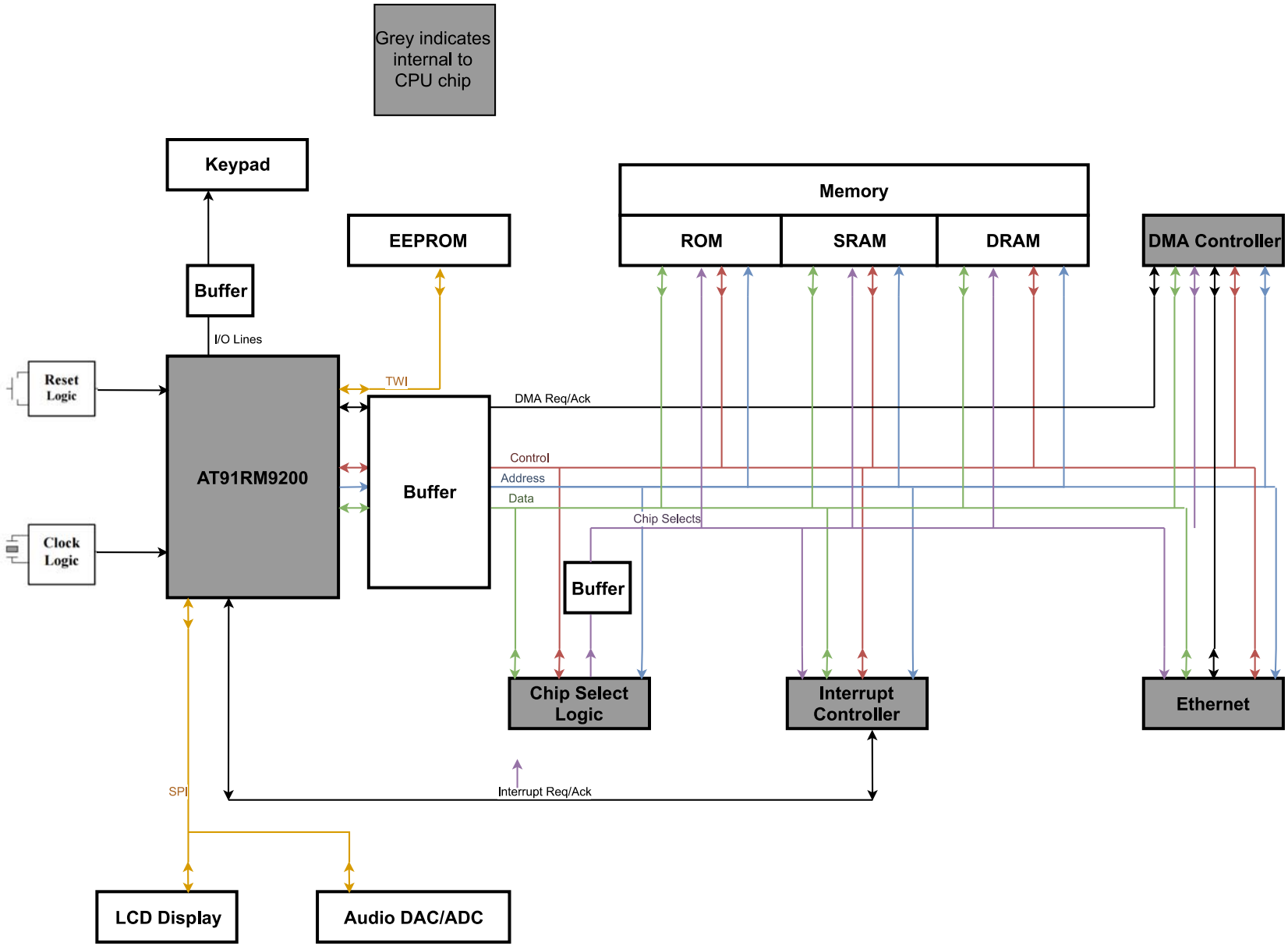
Grey indicates internal to CPU chip
Keypad
Buffer
I/O Lines
EEPROM
Memory
ROM
SRAM
DRAM
DMA Controller
Reset Logic
Clock Logic
AT91RM9200
TWI
Buffer
DMA Req/Ack
Control
Address
Data
Chip Selects
Buffer
Chip Select Logic
Interrupt Controller
Ethernet
SPI
Interrupt Req/Ack
LCD Display
Audio DAC/ADC