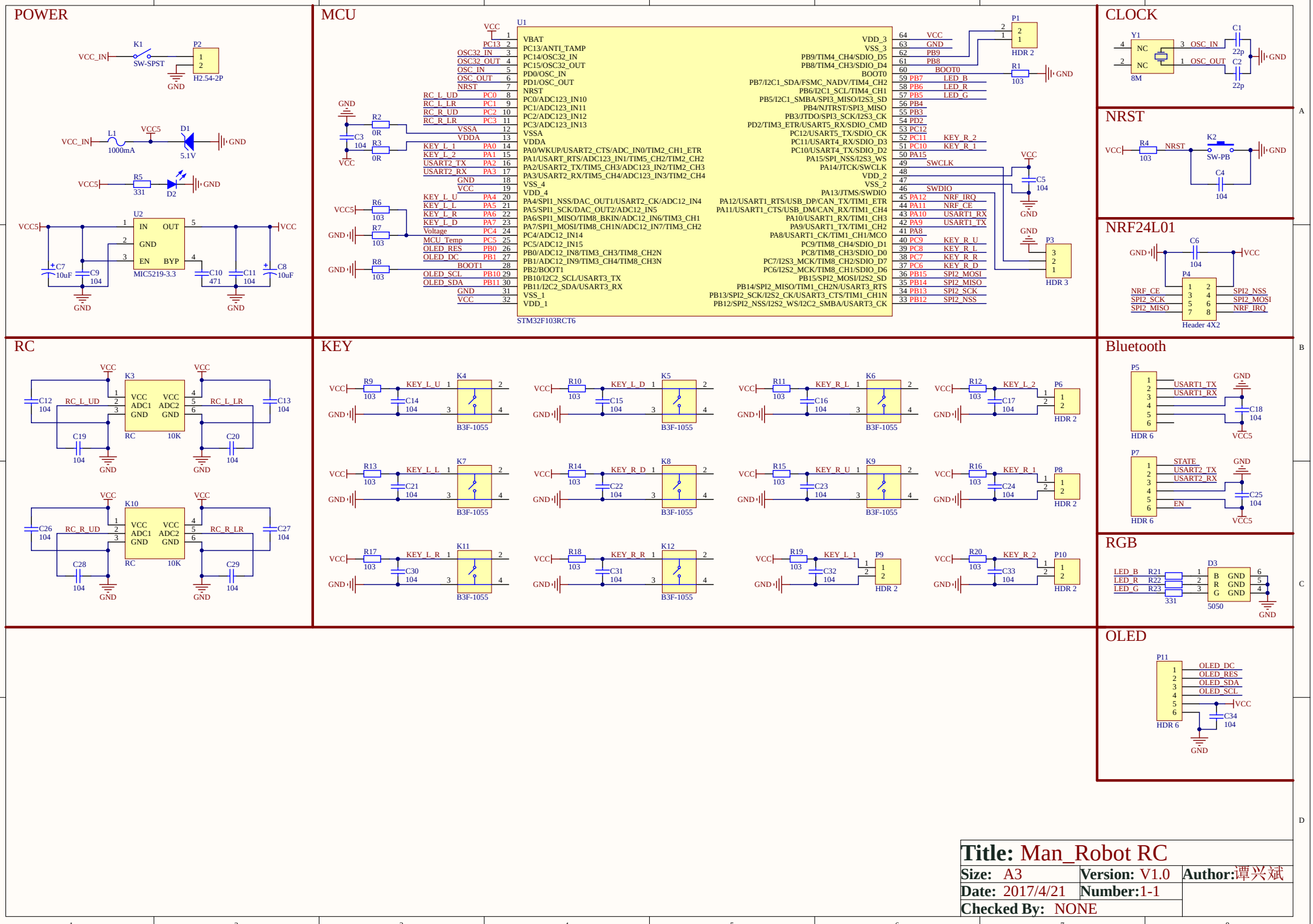

Title: Man_Robot RC		
Size: A3	**Version:** V1.0	**Author:**谭兴斌
Date: 2017/4/21	**Number:**1-1	
Checked By: NONE		

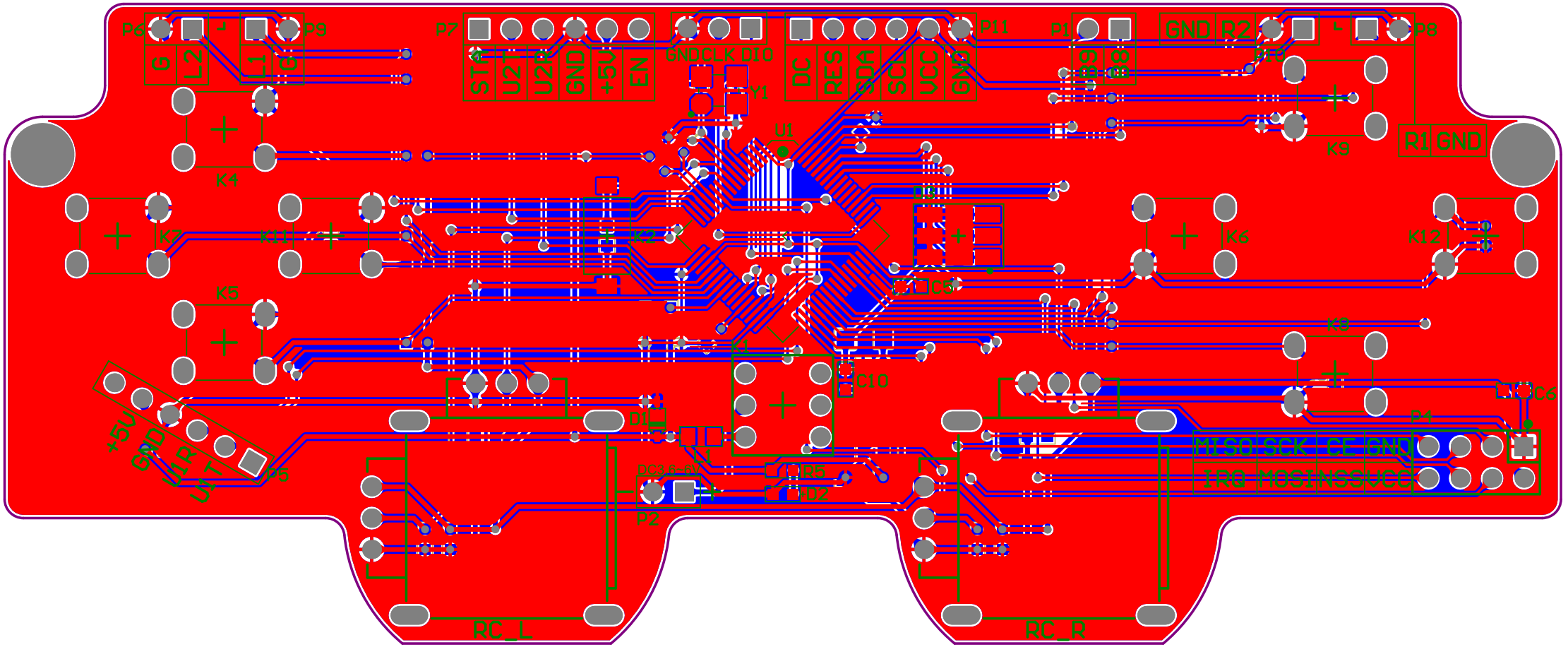
P6
G
L2
L1
L0
P9
P7
STA
U2
U2R
GND
+5V
EN
GNDCLK DIO
Y1
P11
DC
RES
SDA
SCL
VCC
GND
P1
P2
P3
GND
R2
P8
R1
GND
U1
K4
K7
K11
K2
K6
K12
K5
K3
C5
C10
C6
D1
P5
+5V
GND
R1
U1
P2
MISO
SCK
CE
GND
TRG
MOSI
NSS
VCC
RC_L
RC_R

Comment	Description	Designator	Footprint	LibRef	Quantity
Cap-0603	Cap	C1, C2, C3, C4, C5, C6, C9, C10, C11, C12, C13, C14, C15, C16, C17, C18, C19, C20, C21, C22, C23, C24, C25, C26, C27, C28, C29, C30, C31, C32, C33, C34	0603-CAP	Cap-0603	32
Cap-AVX	tantalum capacitors	C7, C8	A-3216	Cap-AVX	2
Dioe-Zener	Zener Dioe	D1	SOD-323	Dioe-Zener	1
LED-0603	LED	D2	0603-LED_R	LED-0603	1
5050	RGB LED	D3	5050-RGB	LED_RGB	1
SW-SPST	SW	K1	SW-SPST-6	SW-SPST	1
SW-PB	SW	K2	SW-3X6X2.5	SW-PB	1
RC		K3, K10	RC	RC	2
B3F-1055	SW-PB B3F-1050 B3F-1052 B3F-1055 B3F-1056 B3F-1052-G	K4, K5, K6, K7, K8, K9, K11, K12	B3F-1055	B3F1055	8
Fuse-0805	Fuse	L1	0805	Fuse-0805	1
HDR 2	Header, 2.54mm, 2-Pin	P1, P6, P8, P9, P10	HDR2.54-1x2	HDR 2	5
H2.54-2P	XH2.54	P2	XH2.54-2	H2.54-2P	1
HDR 3	Header, 2.54mm, 3-Pin	P3	HDR2.54-1x3	HDR 3	1
Header 4X2	Header, 4-Pin, Dual row	P4	HDR2X4	Header 4X2	1
HDR 6	Header, 2.54mm, 6-Pin	P5, P7, P11	HDR2.54-1x6	HDR 6	3
Res-0603	Res	R1, R2, R3, R4, R5, R6, R7, R8, R9, R10, R11, R12, R13, R14, R15, R16, R17, R18, R19, R20, R21, R22, R23	0603-RESISTOR	Res-0603	23
STM32F103RCT6		U1	LQFP-64	STM32F103Rxxx	1
MIC5219-3.3	POWER DC-DC	U2	SOT-225	MIC5219-3.3	1
XTAL-4	Crystal Oscillator	Y1	XTAL-3225	XTAL-4	1