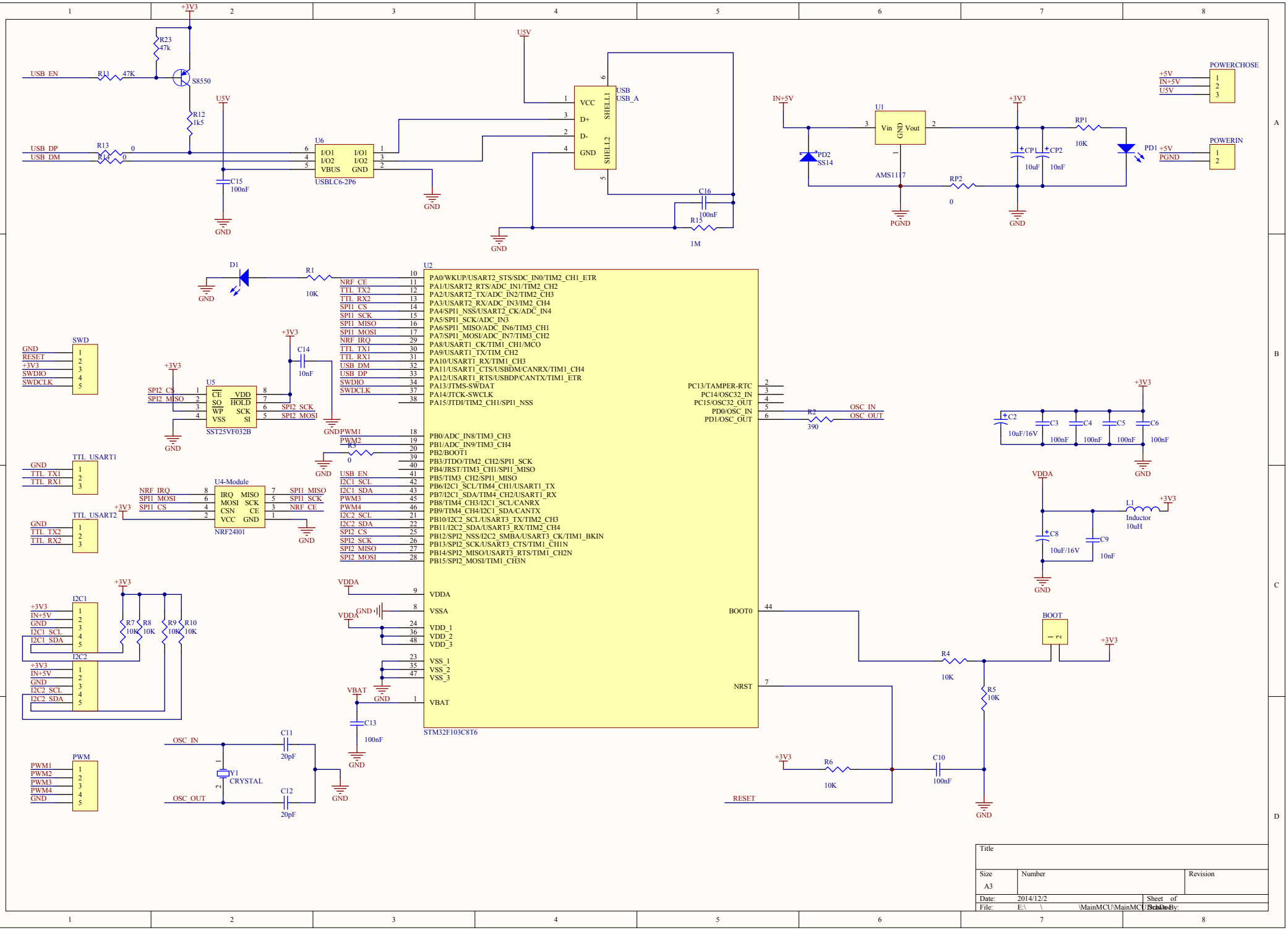

Title		
Size A3	Number	Revision
Date: 2014/12/2		Sheet of
File: E:\ \ \MainMCU\MainMCU.Schdoc		Drawn By: