Microsoft

AZ-140

Configure and Operate
Azure Virtual Desktop

Create and manage session host image for Azure Virtual Desktop

AZ-140 Agenda

Learning Path 1

1. Azure Virtual Desktop Architecture
2. Design the Azure Virtual Desktop architecture
3. Design for user identities and profiles

6 monate
10 x

Lab 1-6

Learning Path 2

4. Implement and manage networking for AVD
5. Implement and manage storage for AVD
6. Create and configure host pools and session hosts for AVD
7. Create and manage session host image for AVD

Lab 7

Learning Path 3

6 monate
10 x

8. Manage access for AVD
9. Manage security for AVD

Learning Path 4

10. Implement and manage FSLogix
11. Configure user experience settings
12. Install and configure apps on a session host

Learning Path 5

13. Monitor and manage performance and health
14. Plan and implement updates, backups, and disaster recovery

Introduction

Golden Image

After completing this module, you'll be able to:

- Create a managed VM image for an Azure Virtual Desktop-specific configuration.
- Modify a session host image.
- Plan for image update and management.
- Create and use an Azure Compute Gallery for Azure Virtual Desktop.
- Install language packs in Azure Virtual Desktop.

© Copyright Microsoft Corporation. All rights reserved.

Create a golden image in Azure

Create and manage session host image for Azure Virtual Desktop

Create a golden image in Azure

Compute Gallery

Windows 10 Enterprise multi-session is available in the Azure Image Gallery. There are two options for customizing:

- The first option is to provision a virtual machine in Azure (See: [Create a virtual machine from a managed image](#)).
- The second option is to create the image locally by downloading the image, provisioning a Hyper-V virtual machine, and customizing it to suit your needs.

Create a virtual machine from a managed image

- You can create multiple virtual machines from an Azure managed virtual machine image using the Azure portal or PowerShell. A managed virtual machine image contains the information necessary to create a virtual machine, including the OS and data disks.
- Before creating a new virtual machine, create a managed virtual machine image to use as the source image and grant read access on the image to any user who should have access to the image.
- One managed image supports up to 20 simultaneous deployments.

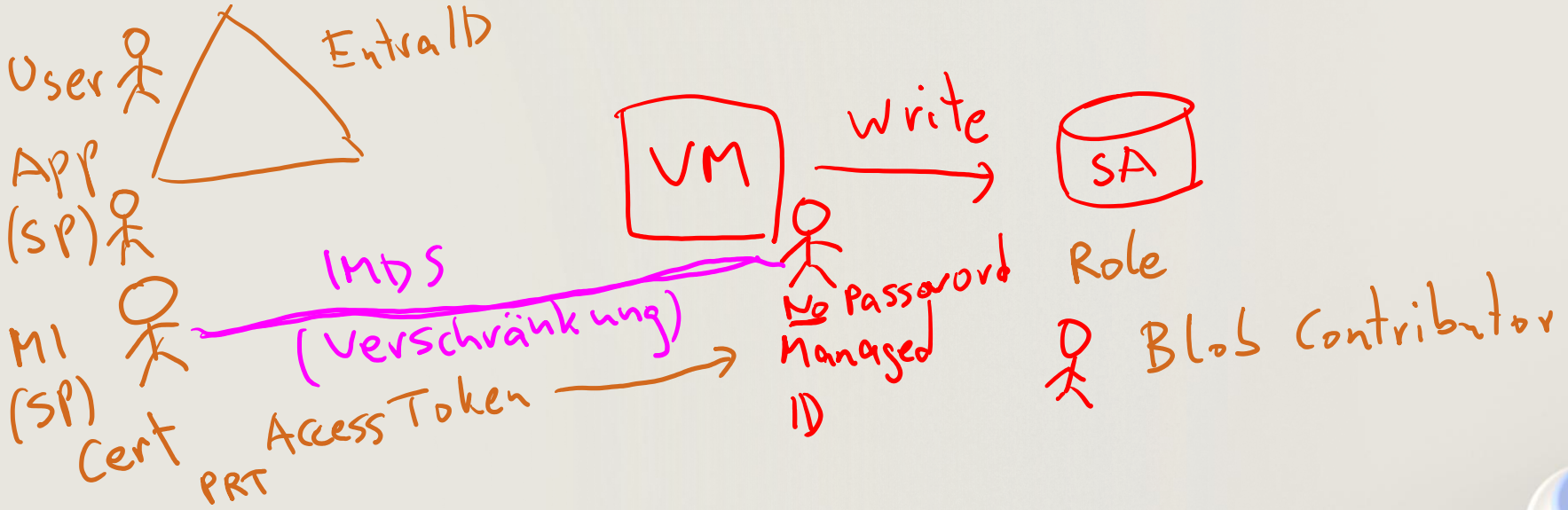

100 Jahre QM

Using Azure VM Image Builder

System Assigned Managed ID
VM 1:1

Create and manage session host image for Azure Virtual Desktop

User Assigned Managed ID

VM1
VM2
VM3
N:1

Using Azure VM Image Builder

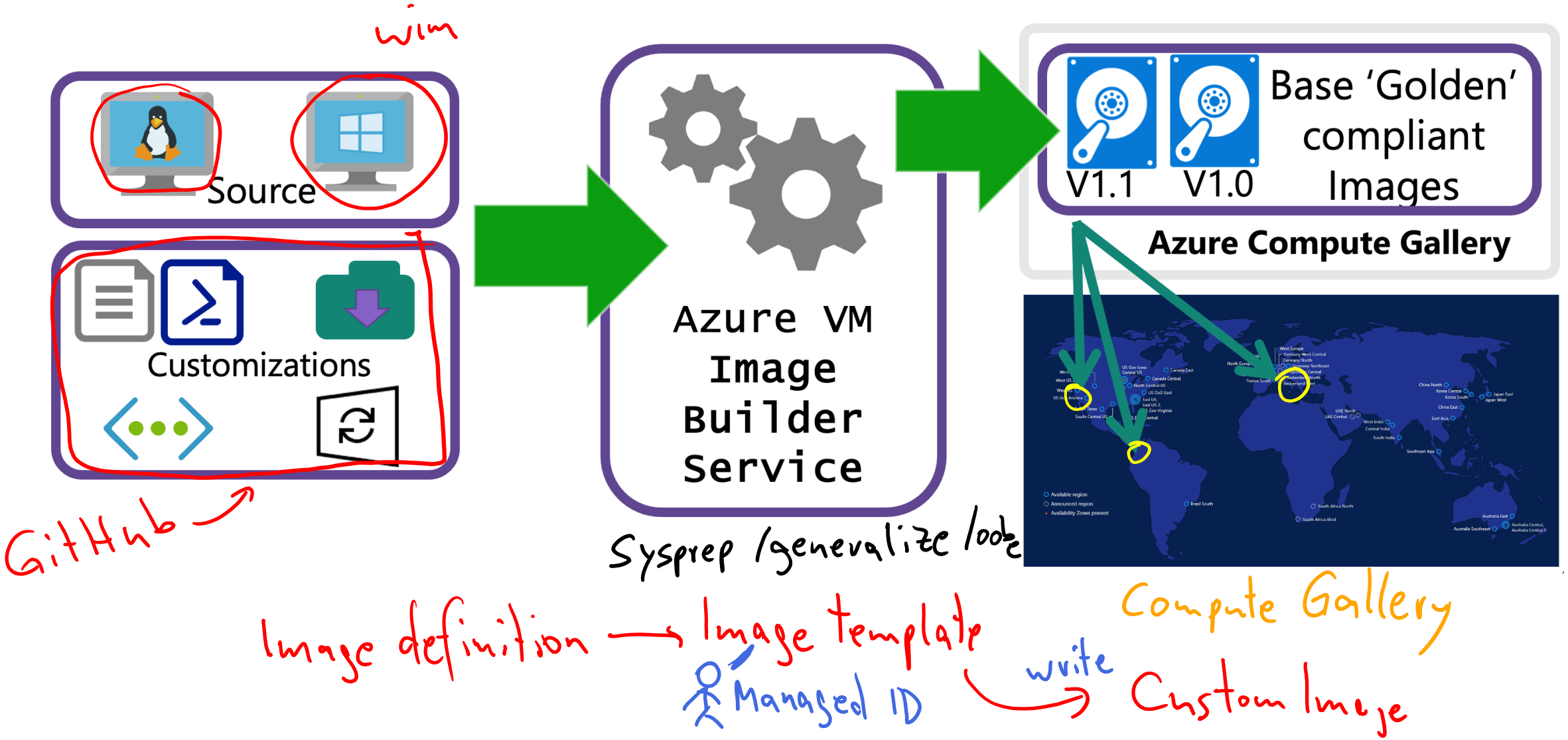

Create an Azure Virtual Desktop image by using VM Image Builder and PowerShell

Create and manage session host image for Azure Virtual Desktop

Considerations for building Windows images

- **VM size:** For Windows, use Standard_D2_v2 or greater. The default size is Standard_D1_v2, which isn't suitable for Windows.
- Use these settings, or the build will stop responding:

```
"runElevated": true, "runAsSystem": true,
```

- **Comment your code:** The VM Image Builder build log, *customization.log*, is verbose. If you comment your scripts by using 'write-host', they'll be sent to the logs, which should make troubleshooting easier.

```
write-host 'AIB Customization: Starting OS Optimizations script'
```

- **Exit codes:** VM Image Builder expects all scripts to return a 0 exit code. If you use a non-zero exit code, VM Image Builder fails the customization and stops the build. If you have complex scripts, add instrumentation and emit exit codes, which will be shown in the *customization.log* file.

```
Write-Host "Exit code: " $LASTEXITCODE
```

- **Test and your code on a standalone VM.**

Plan for image update and management

Create and manage session host image for Azure Virtual Desktop

The Azure Compute Gallery lets you share your custom VM images with others in your organization, within or across regions, within an Entra ID tenant.

You can create multiple galleries so that you can logically group shared images.

Azure Compute Gallery is a service that helps you build structure and organization around images. Azure Compute Gallery provides:

- Global replication of images.
- Versioning and grouping of images for easier management.
- Highly available images with Zone Redundant Storage (ZRS) accounts in regions that support Availability Zones. ZRS offers better resilience against zonal failures.
- Premium storage support (Premium_LRS).
- Sharing across subscriptions, and even between Entra ID tenants, using role-based access control (RBAC).
- Scaling your deployments with image replicas in each region.

Scaling

Azure Compute Gallery allows you to specify the number of replicas you want Azure to keep. Replication helps in multi-VM deployment scenarios as the VM deployments can be spread to different replicas reducing the chance of instance creation processing being throttled due to overloading of a single replica.

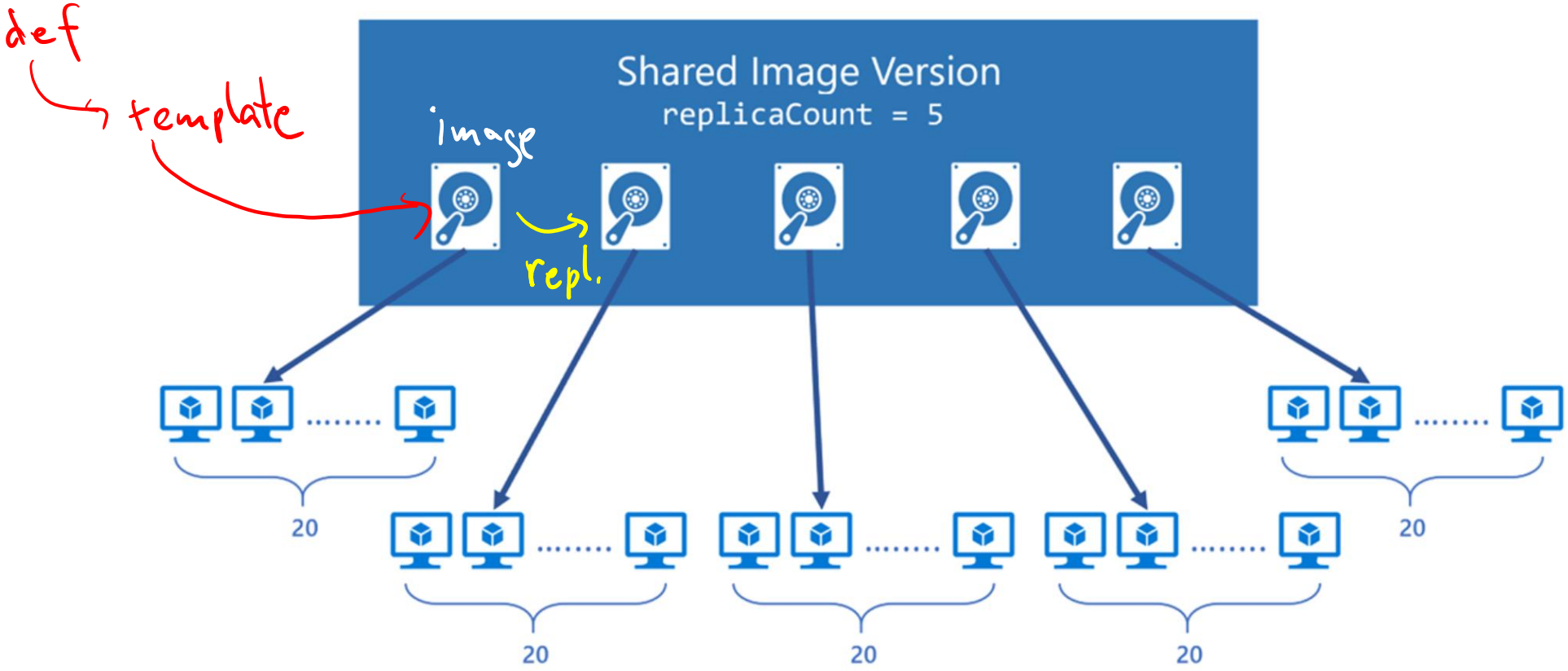

Make images highly available

- Azure Zone Redundant Storage (ZRS) provides resilience against an Availability Zone failure in the region.
- With the general availability of Azure Compute Gallery, you can choose to store your images in ZRS accounts in regions with Availability Zones.

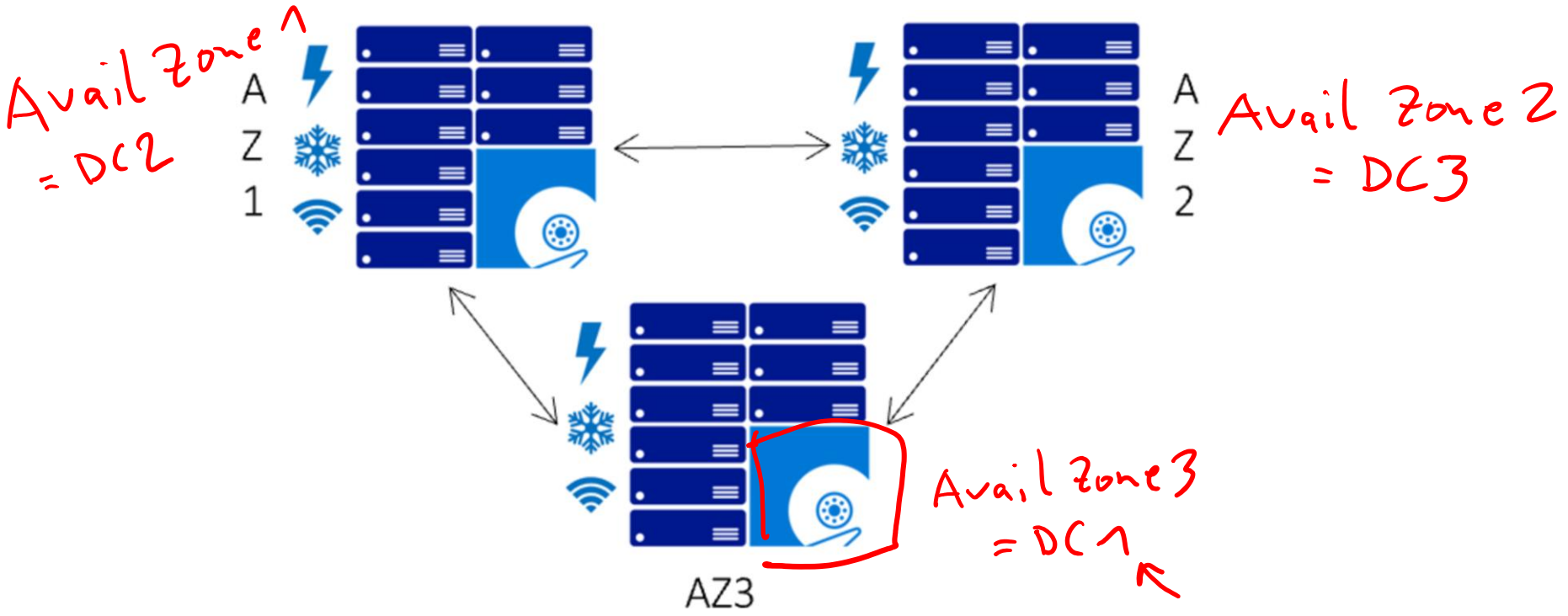

Recovery Service Vault

Backup
VM
Files
SAP VM

Manage licensing for session hosts that run Windows client

Create and manage session host image for Azure Virtual Desktop

Manage licensing for session hosts that run Windows client

Azure Virtual Desktop licensing allows you to apply a license to any Windows or Windows Server virtual machine that is registered as a session host in a host pool receiving user connections.

The license does not apply to virtual machines are running as file share servers or domain controllers.

Ways to use the Azure Virtual Desktop license:

- You can create a host pool and its session host virtual machines using the Azure Marketplace offering. Virtual machines created this way automatically have the license applied.
- You can create a host pool and its session host virtual machines using the GitHub Azure Resource Manager template. Virtual machines created this way automatically have the license applied.
- You can apply a license to an existing session host virtual machine. Follow the instructions in Create a host pool with PowerShell to create a host pool and associated virtual machines.

Install language packs in Azure Virtual Desktop

Create and manage session host image for Azure Virtual Desktop

Language packs in Azure Virtual Desktop

There are two ways you can accommodate the language needs of your users:

- Build dedicated host pools with a customized image for each language.
- Have users with different language and localization requirements in the same host pool, but customize their images to ensure they can select whichever language they need.

You need the following to customize Windows 10 Enterprise multi-session images to add multiple languages:

- An Azure virtual machine (VM) with Windows 10 Enterprise multi-session.
- The Language ISO, Feature on Demand (FOD) Disk 1, and Inbox Apps ISO of the OS version the image uses.
- An Azure Files Share or a file share on a Windows File Server Virtual Machine
- The file share (repository) must be accessible from the Azure VM you plan to use to create the custom image.

Knowledge check

Create and manage session host image for Azure Virtual Desktop

Knowledge check

What is the most efficient and cost-effective way to manage the language needs for users of a Windows 10 Enterprise multi-session image?

Choices:

1. Build dedicated host pools with a customized image for each language
2. Provides access to the Azure Compute Gallery images
3. Customize the images to ensure they can select whichever language they need

Knowledge check

A system administrator is tasked with creating a custom Windows 10 Enterprise multi-session image. They have prepared the necessary language packs and updates. What is the next step in this process?

Choices:

1. The administrator should disconnect from the language package, FOD, and Inbox Apps file share repository.

2. The administrator should delete all existing language packs from the system.

3. The administrator should connect to the language package, FOD, and Inbox Apps file share repository and mount it to a letter drive.

Knowledge check

A system administrator needs to create a Windows 10 Enterprise multi-session image locally. They have downloaded the image and provisioned a Hyper V VM. What is the next step in this process?

Choices:

1. Upload the image to Azure without any modifications
2. Delete the downloaded image and start the process again
3. Customize the image to suit the system's needs

Summary

Create and manage session host image for Azure Virtual Desktop

Summary

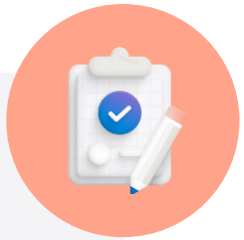

What you learned:

- Create a managed VM image for an Azure Virtual Desktop-specific configuration.
- Modify a session host image.
- Plan for image update and management.
- Create and use an Azure Compute Gallery for Azure Virtual Desktop.
- Install language packs in Azure Virtual Desktop.

© Copyright Microsoft Corporation. All rights reserved.