Title	<Title>		
Size A3	Document Number <Doc>		Rev <RevCo
Date: Wednesday, May 07, 2025	Sheet 1 of 11		

Title	<Title>		
Size A3	Document Number <Doc>		Rev <RevCo
Date: Wednesday, May 07, 2025	Sheet 2 of 11		

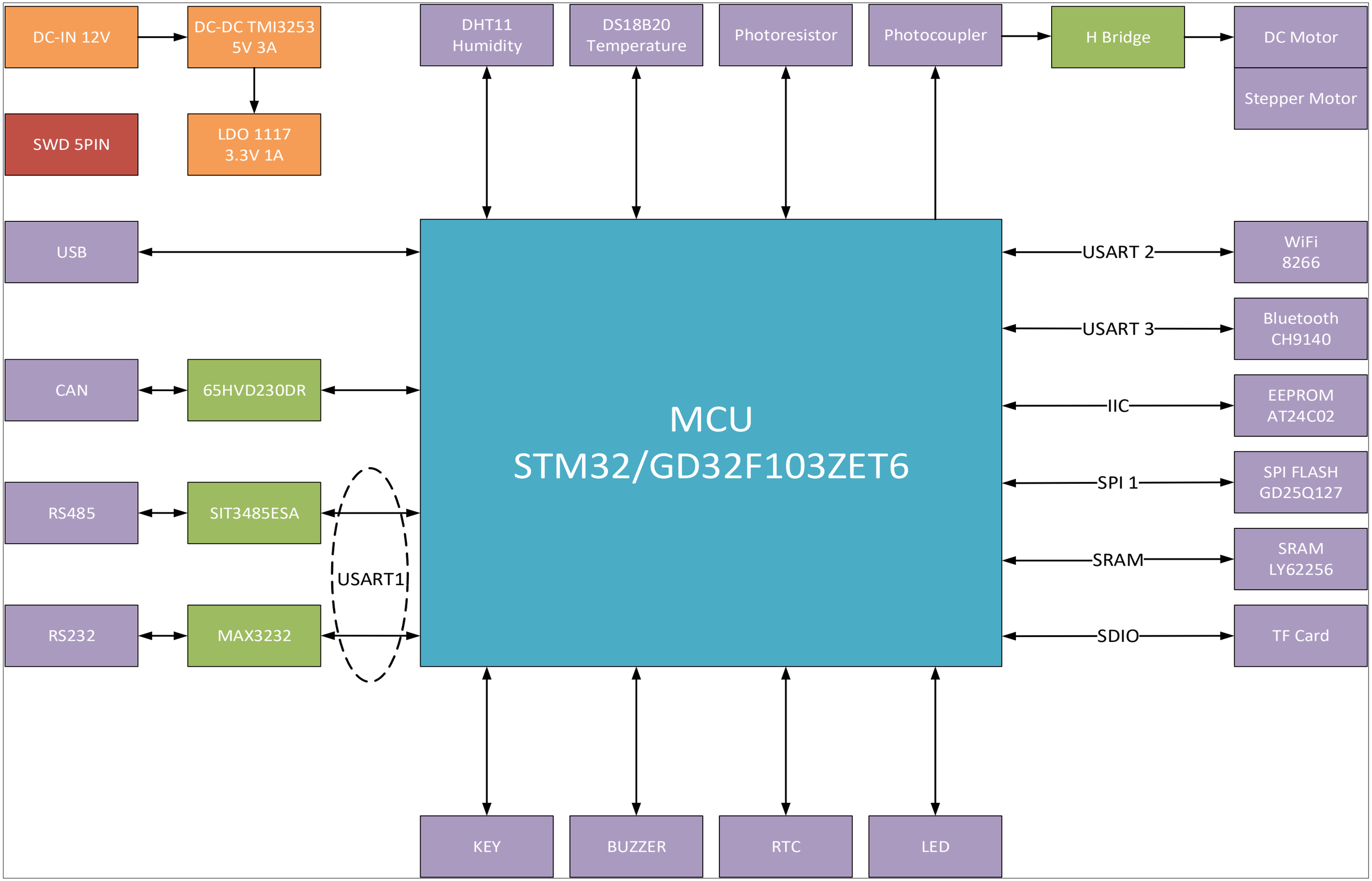

Title	SYSTEM BLOCK	
Size A3	Document Number <Doc>	Rev <RevC
Date: Wednesday, May 07, 2025	Sheet 3 of 11	

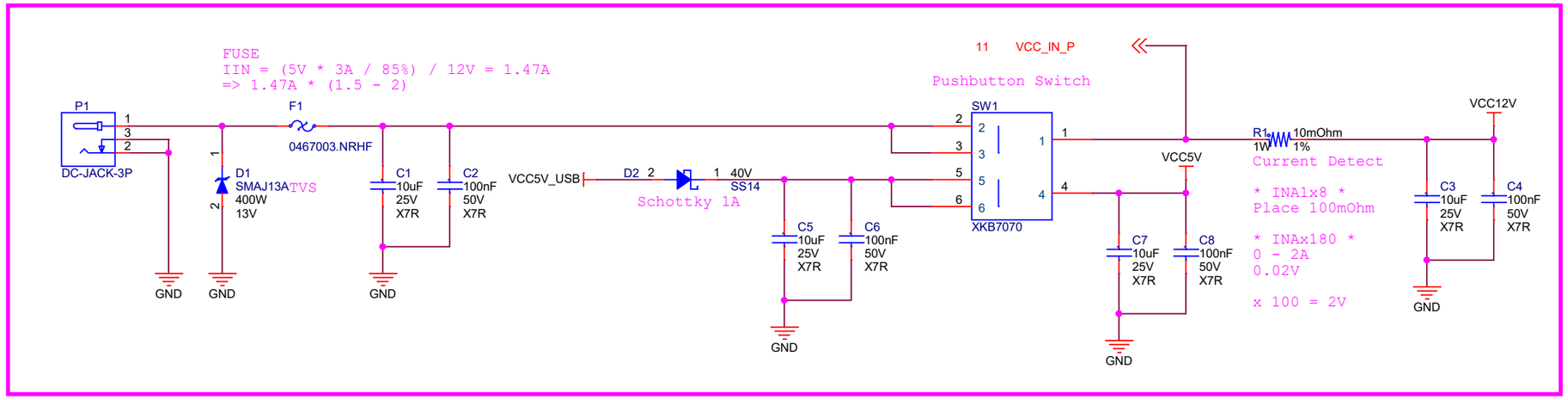

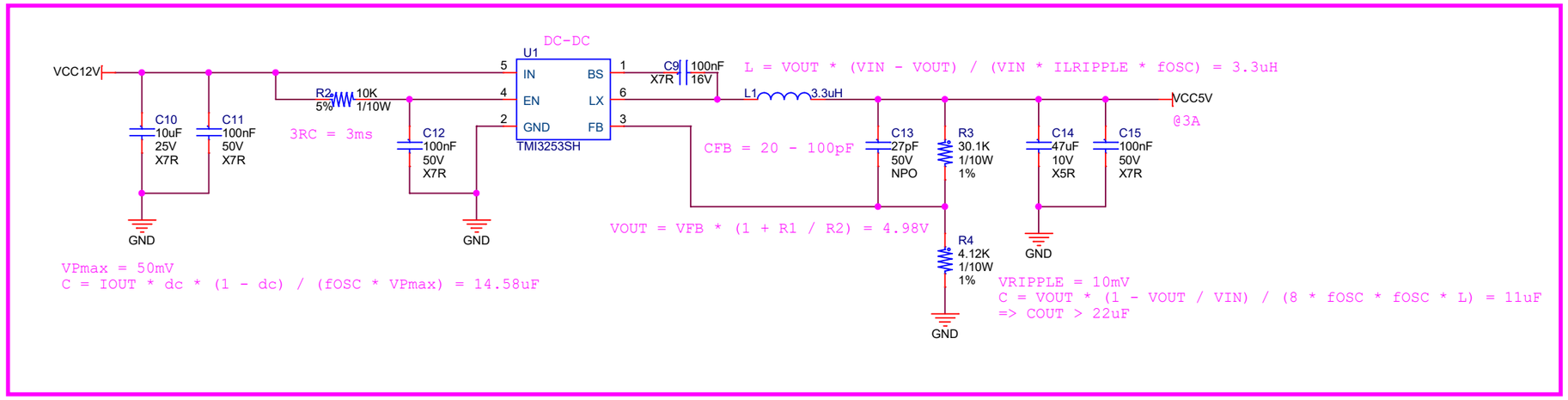

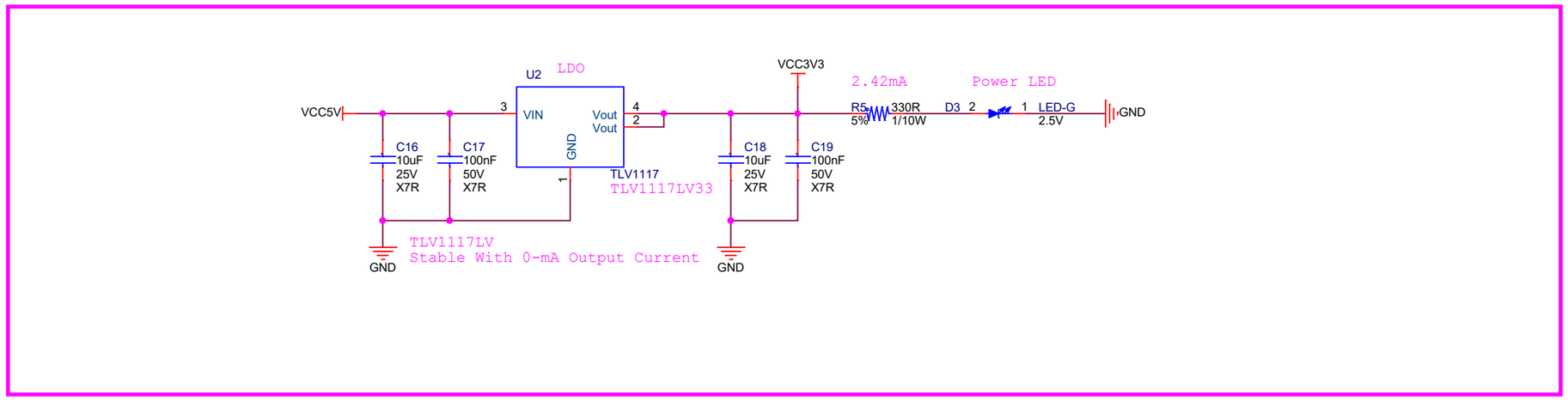

Title	POWER	
Size A3	Document Number <Doc>	Rev <RevC
Date: Thursday, May 08, 2025	Sheet 4 of 11	

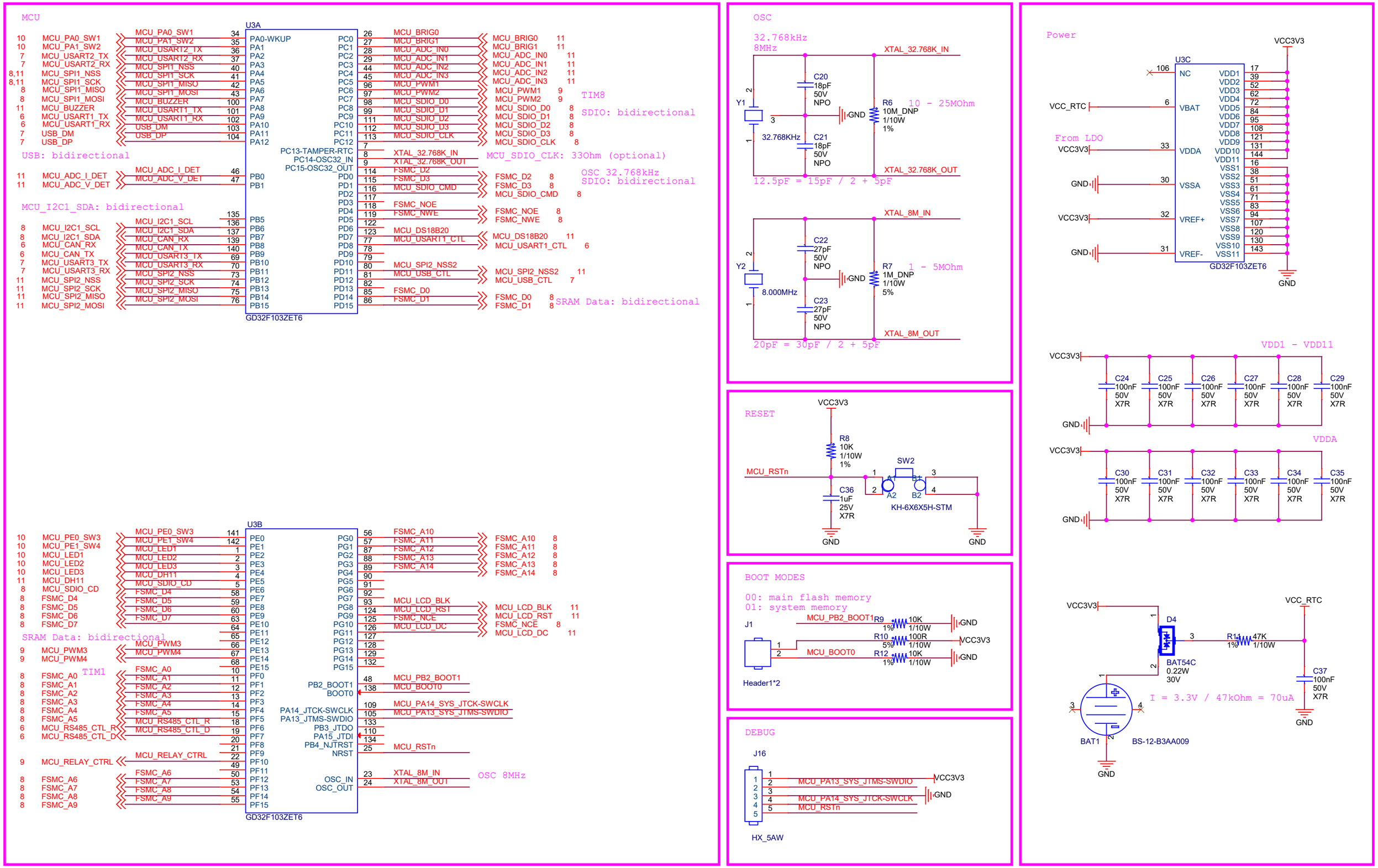

Title	MCU
Size	A3
Document Number	<Doc>
Rev	<RevCo
Date:	Thursday, May 08, 2025
Sheet	5 of 11

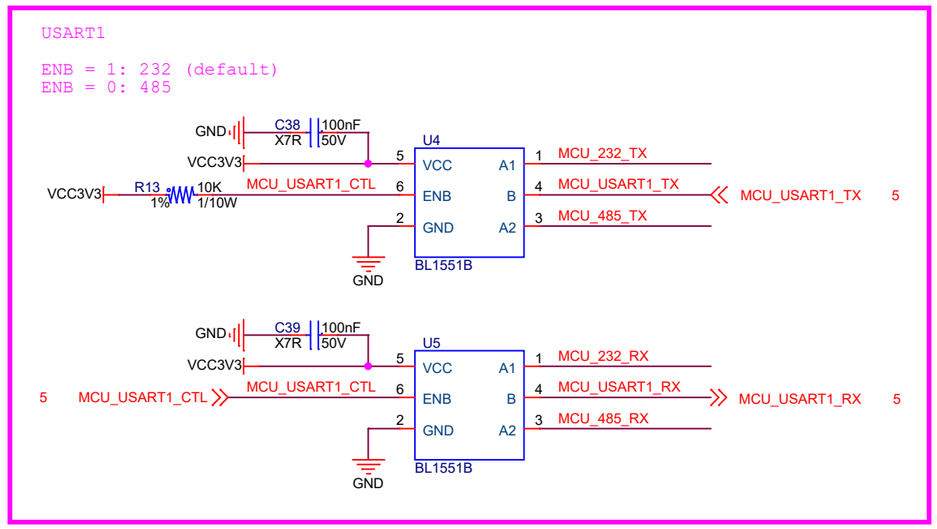

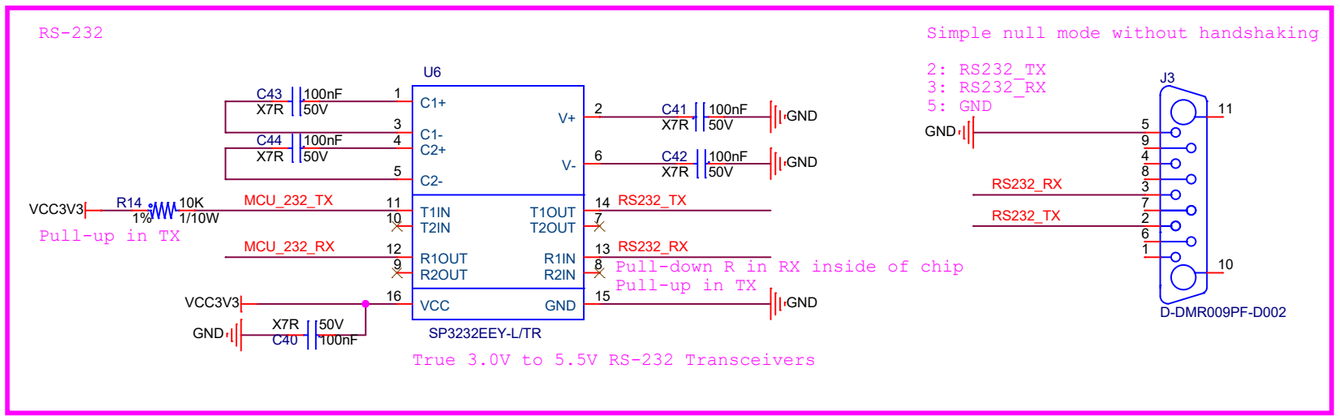

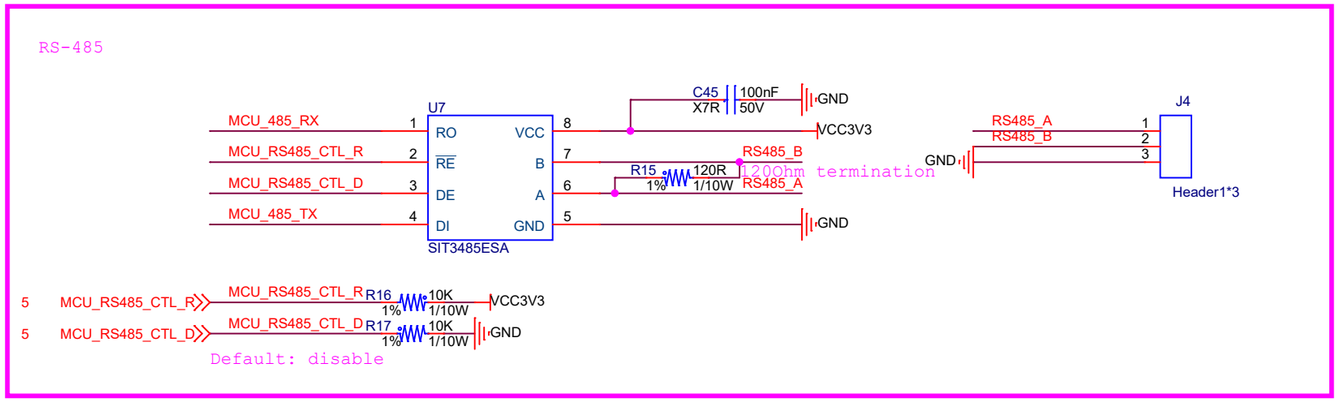

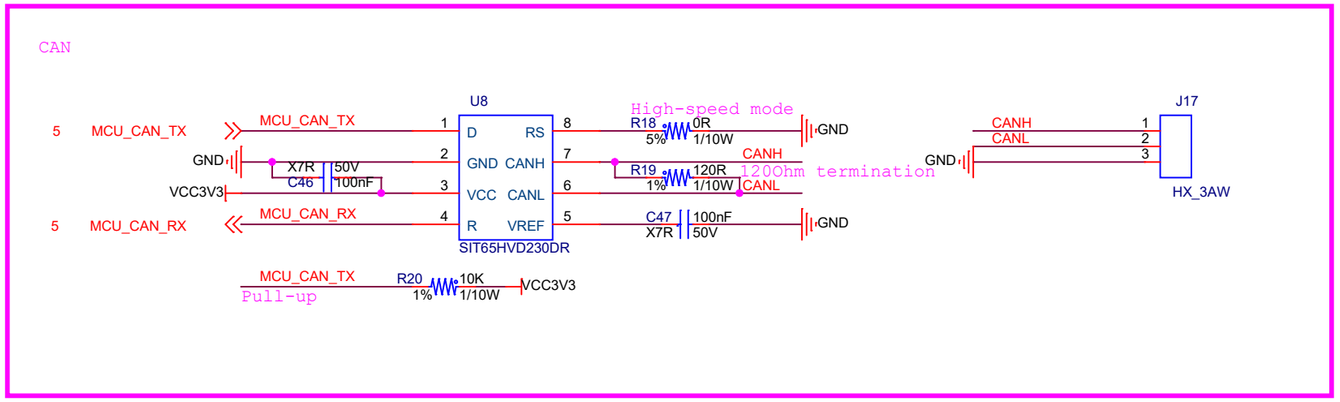

Title	RS232/485/CAN	
Size A3	Document Number <Doc>	Rev <RevCo
Date: Thursday, May 08, 2025	Sheet 6 of 11	

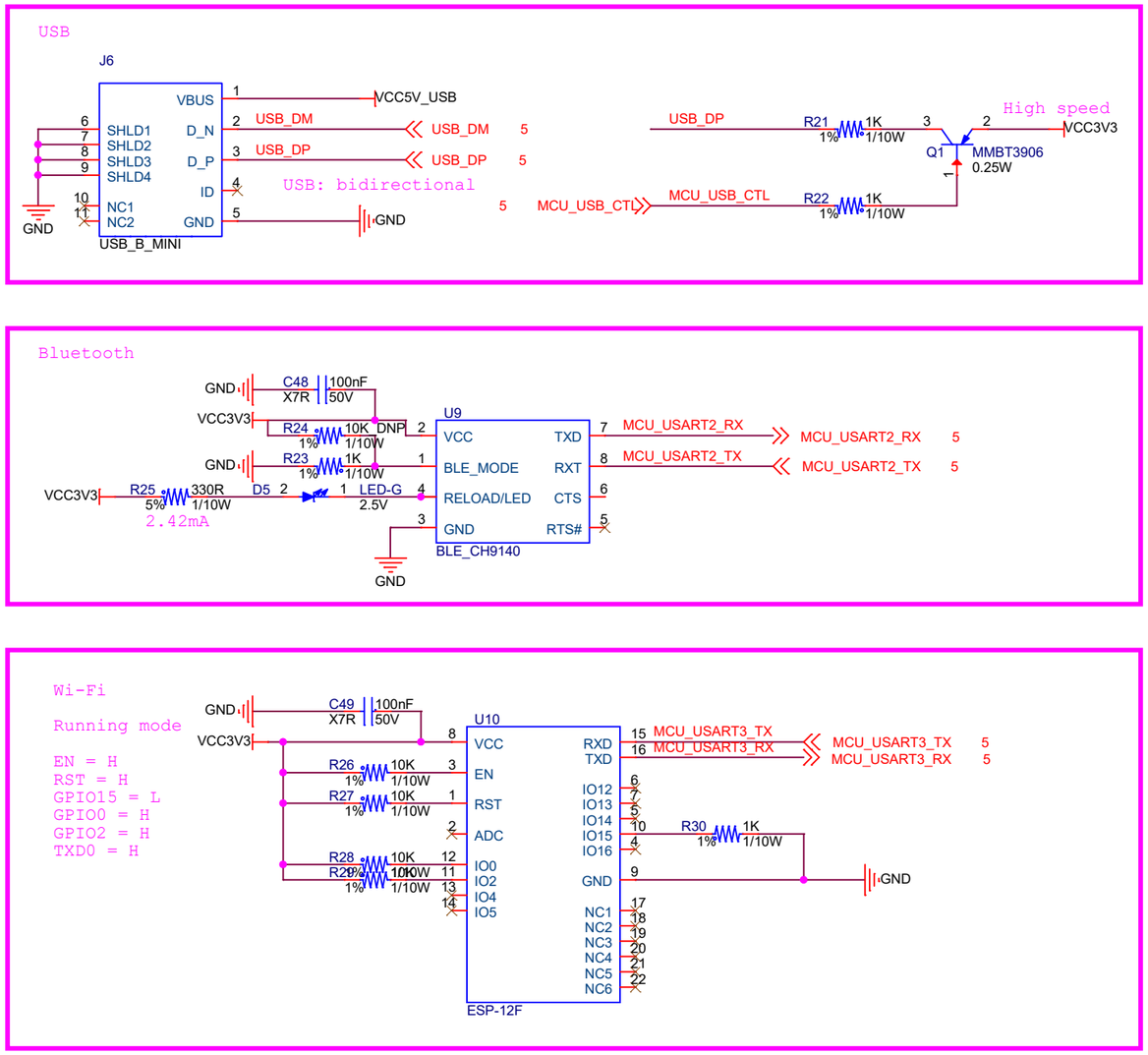

Title	USB/BLE/WIFI
Size A3	Document Number <Doc>
Rev	<RevC
Date: Wednesday, May 07, 2025	Sheet 7 of 11

Title
FLASH/EEPROM/TF/SRAM

Size	Document Number	Rev
A3	<Doc>	<RevC

Date: Wednesday, May 07, 2025 Sheet 8 of 11

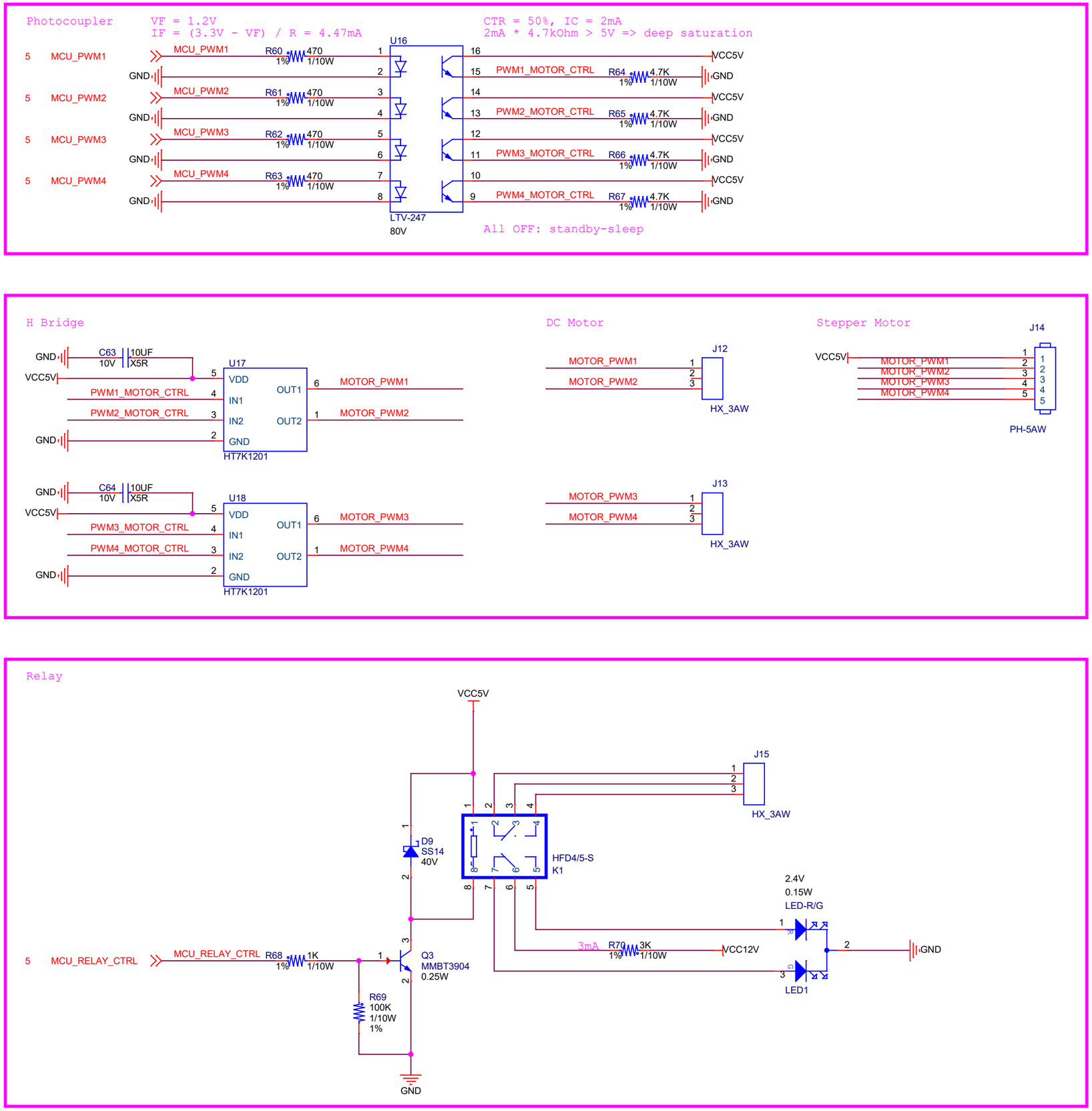

Title	MOTOR/RELAY		
Size A3	Document Number <Doc>		Rev <RevCo
Date: Wednesday, May 07, 2025		Sheet 9 of 11	

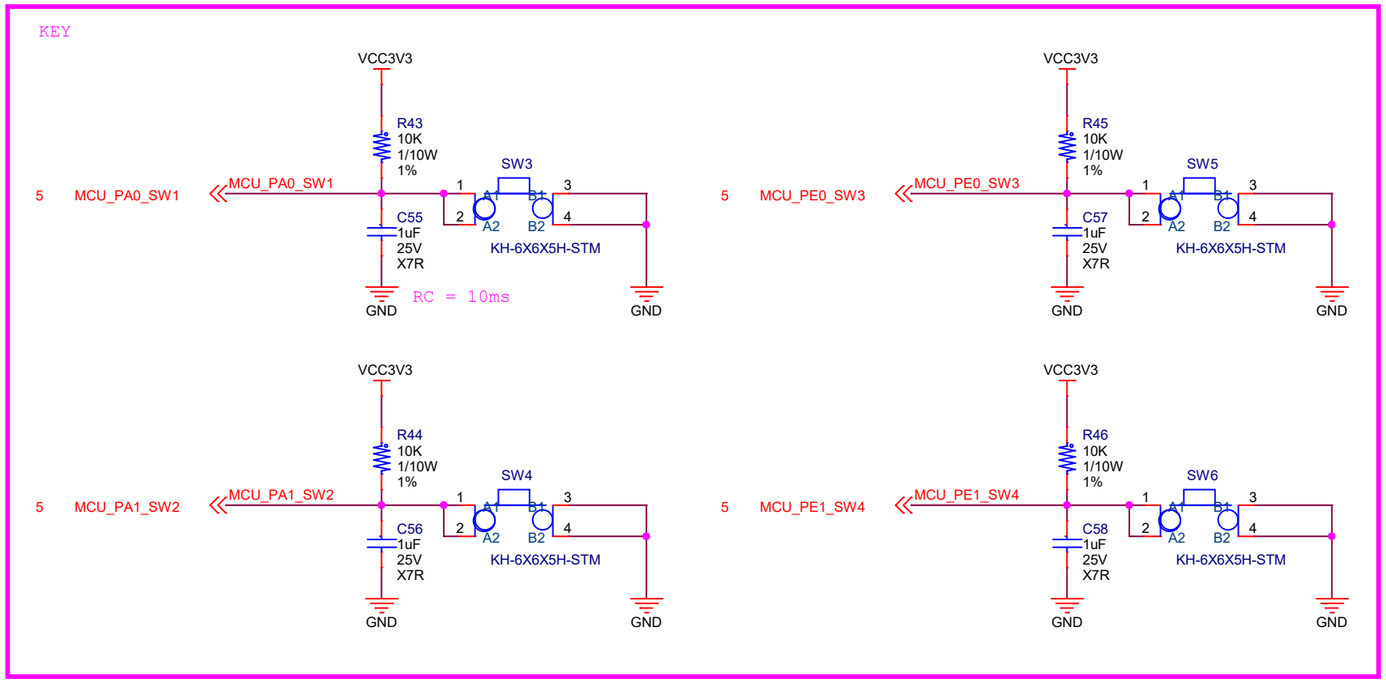

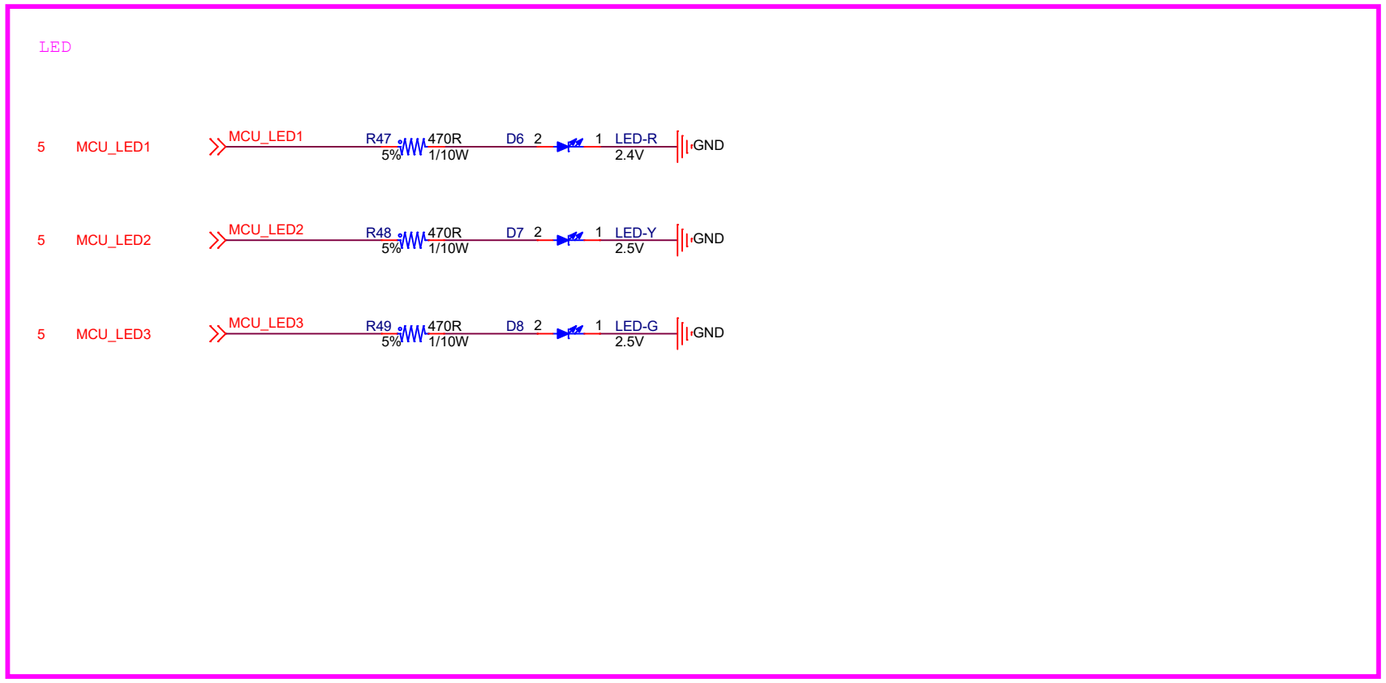

Title	KEY/LED	
Size A3	Document Number <Doc>	Rev <RevC
Date: Wednesday, May 07, 2025	Sheet 10 of 11	

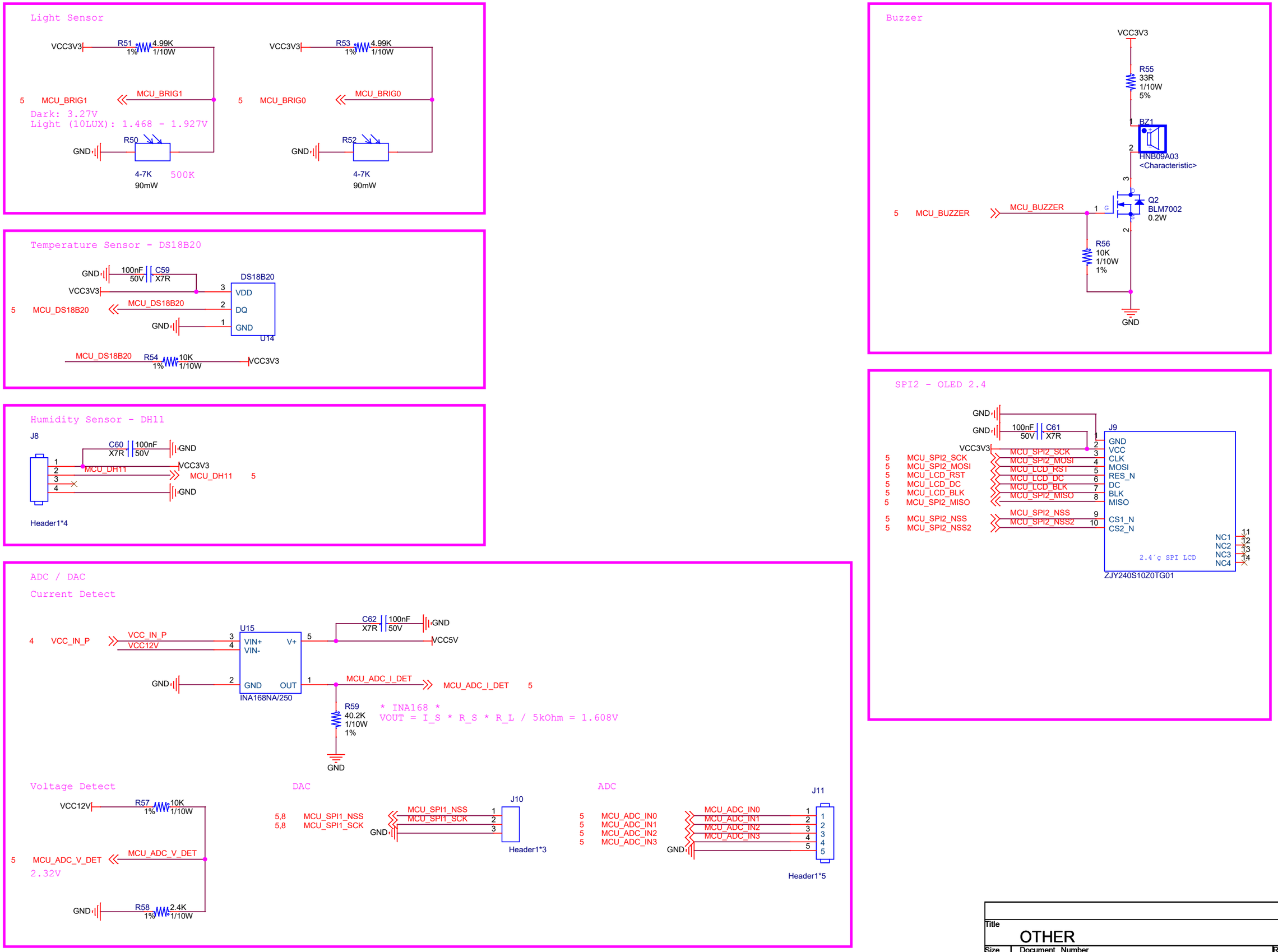

Title	OTHER
Size A3	Document Number <Doc>
Rev	<RevC
Date: Wednesday, May 07, 2025	Sheet 11 of 11