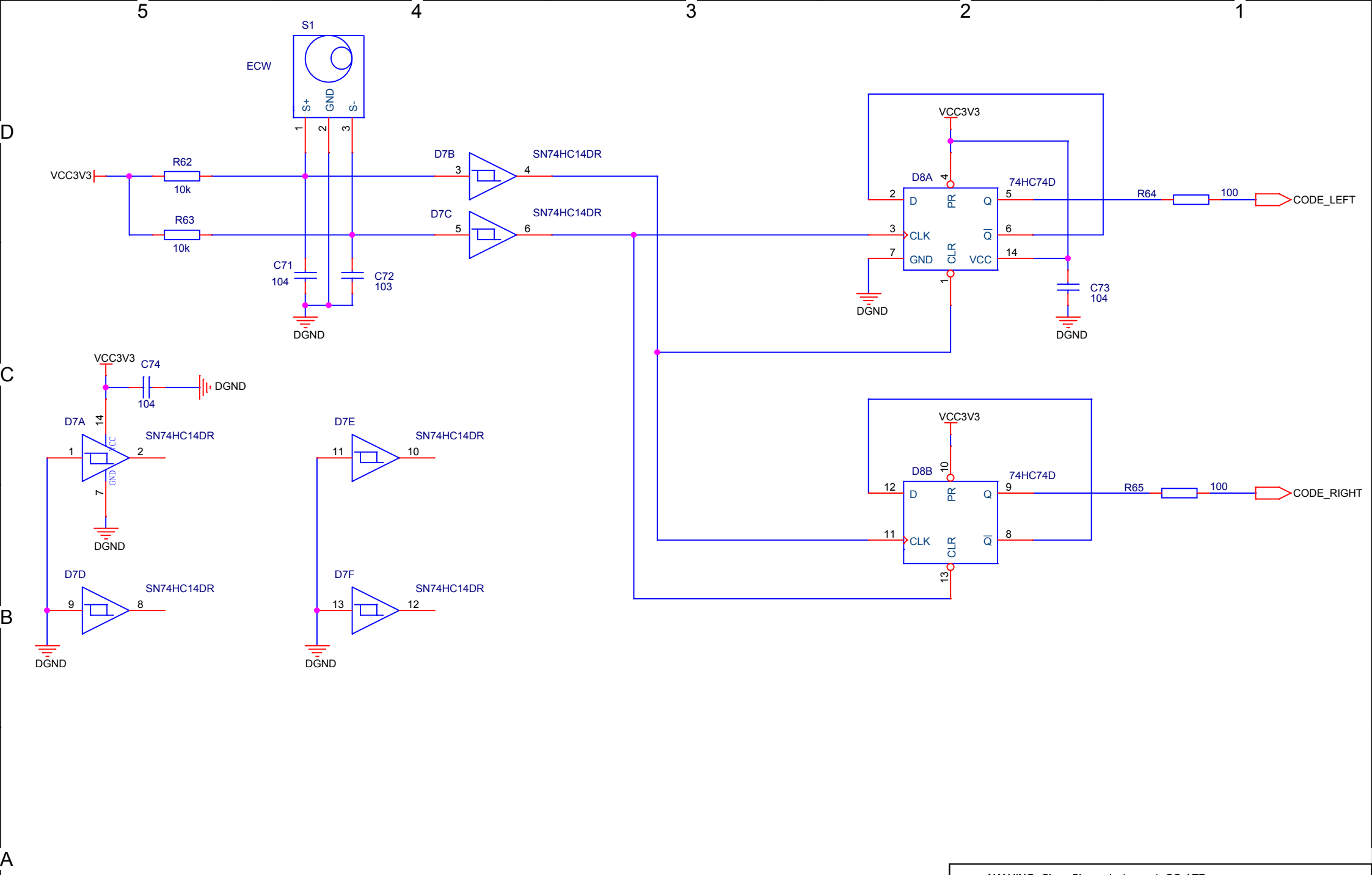

NANJING ChangSheng Instrument CO.,LTD		
Title CS9931YS 液晶转换板 编码开关单元电路		
Size A4	Document Number <Doc>	Rev 1.6
Date: Tuesday, May 17, 2016	Sheet 1 of 7	

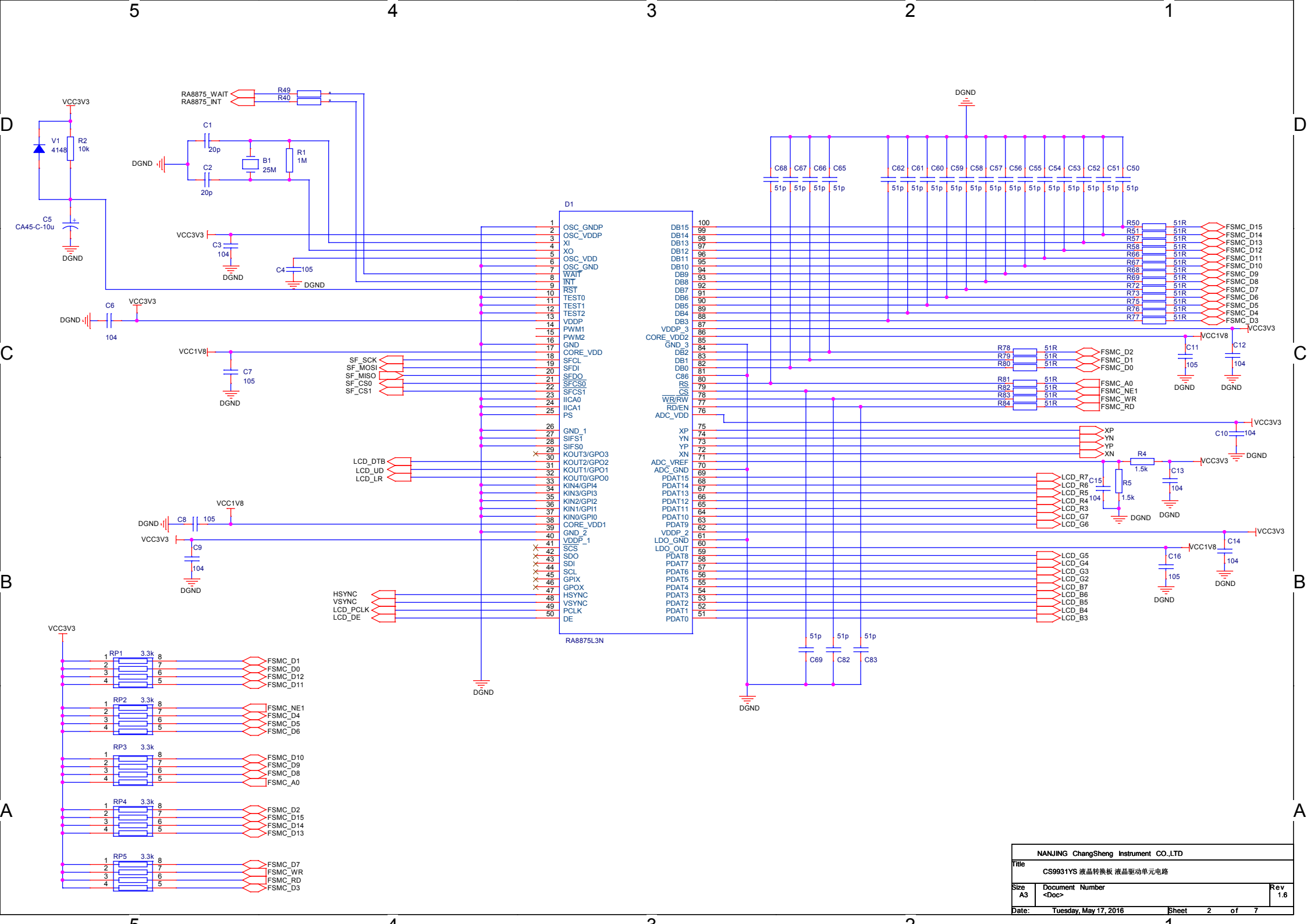

NANJING ChangSheng Instrument CO.,LTD	
Title	CS9931YS 液晶转换板 液晶驱动单元电路
Size A3	Document Number <Doc>
Rev	1.6
Date: Tuesday, May 17, 2016	Sheet 2 of 7

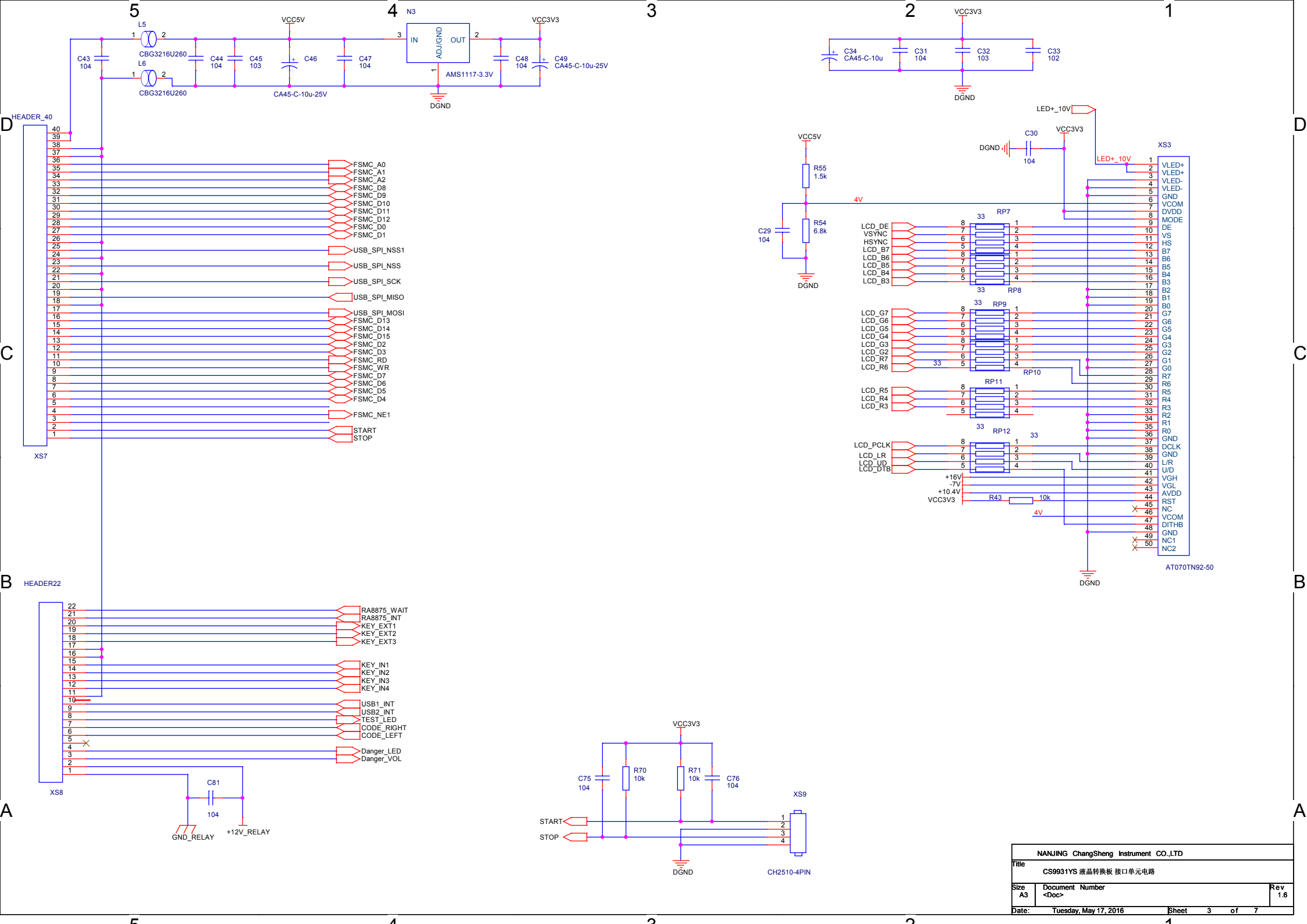

NANJING ChangSheng Instrument CO.,LTD	
Title	CS9931YS 液晶转换板 接口单元电路
Size A3	Document Number <Doc>
Rev 1.6	
Date: Tuesday, May 17, 2016	Sheet 3 of 7

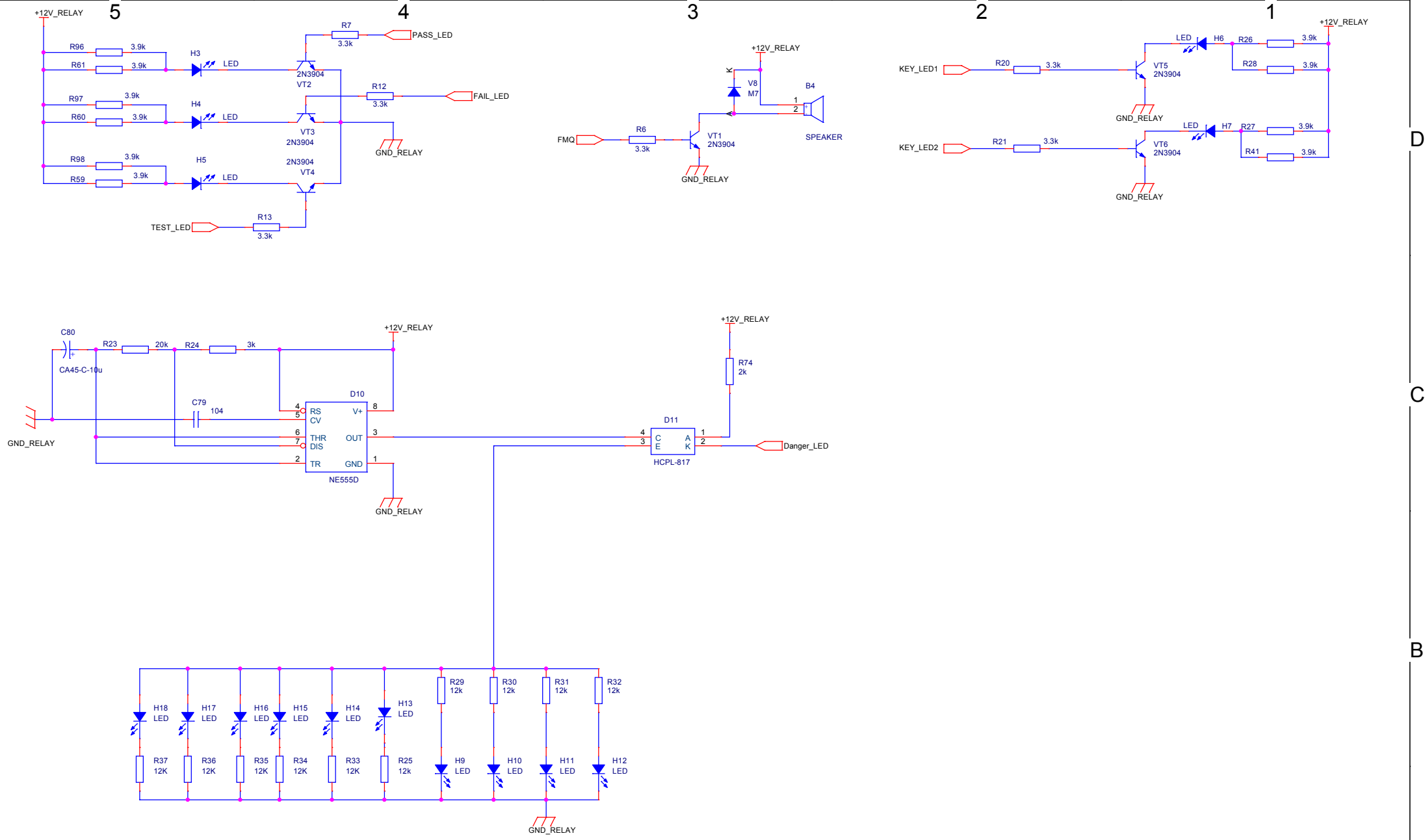

NANJING ChangSheng Instrument CO.,LTD	
Title	CS9931YS 液晶转换板 LED指示灯驱动电路
Size A3	Document Number <Doc>
Rev 1.6	
Date: Tuesday, May 17, 2016	Sheet 4 of 7

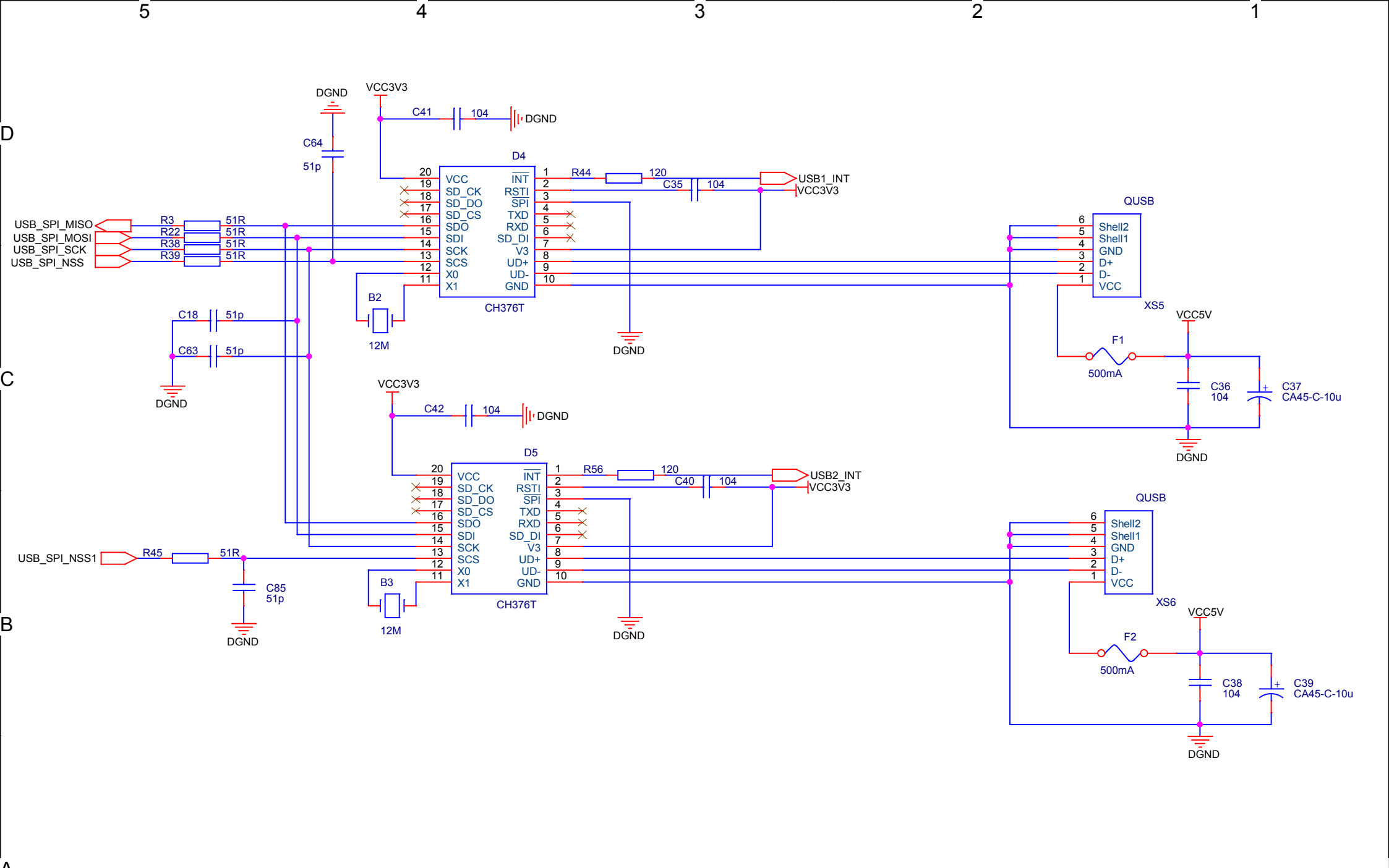

NANJING ChangSheng Instrument CO.,LTD		
Title: CS9931YS 液晶转换板 USB接口单元电路		
Size: A4	Document Number: <Doc>	Rev: 1.6
Date: Tuesday, May 17, 2016	Sheet 5 of 7	

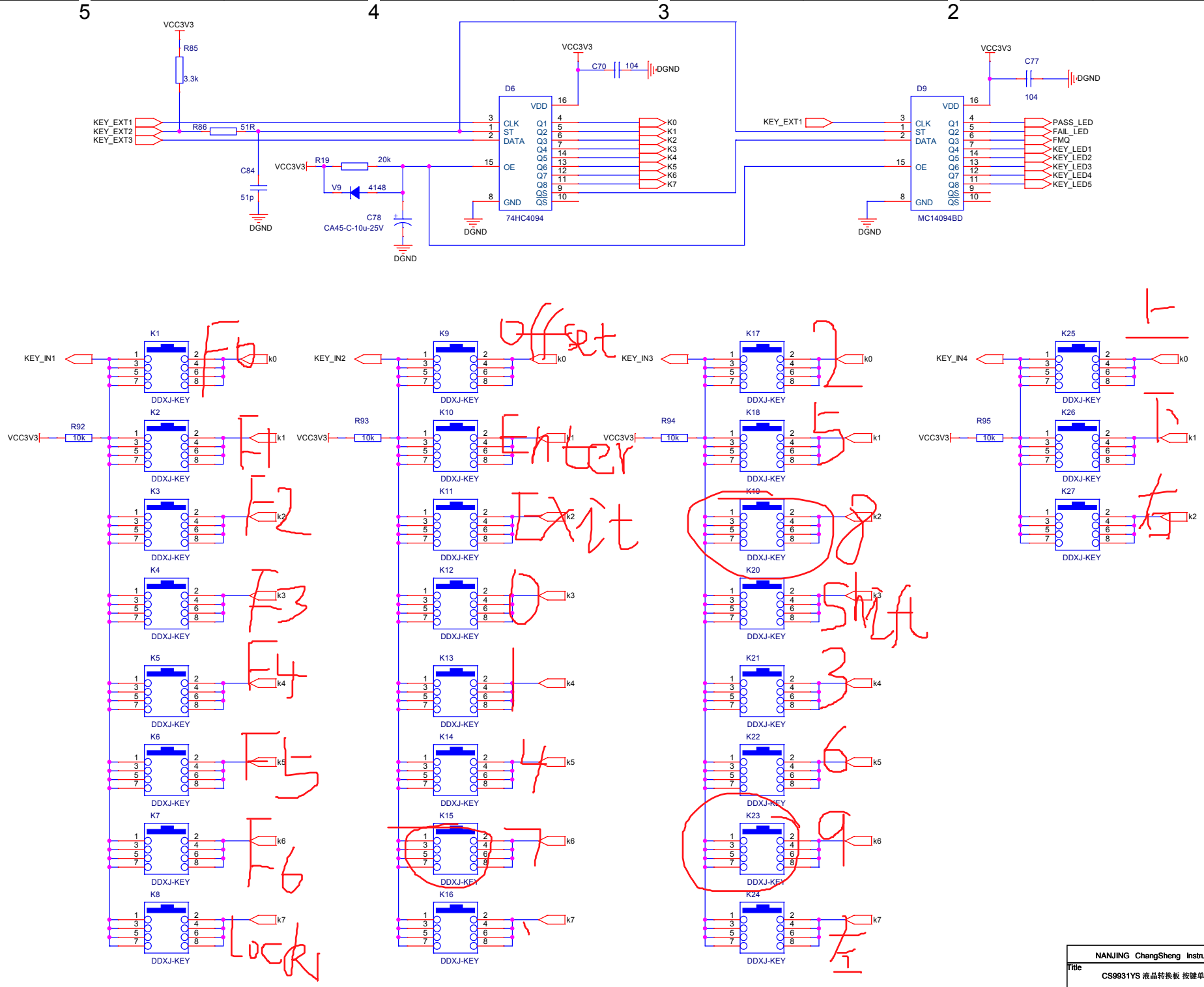

NANJING ChangSheng Instrument CO.,LTD	
Title	CS9931YS 液晶转换板 按键单元电路
Size A3	Document Number <Doc>
Rev 1.6	
Date: Tuesday, May 17, 2016	Sheet 6 of 7

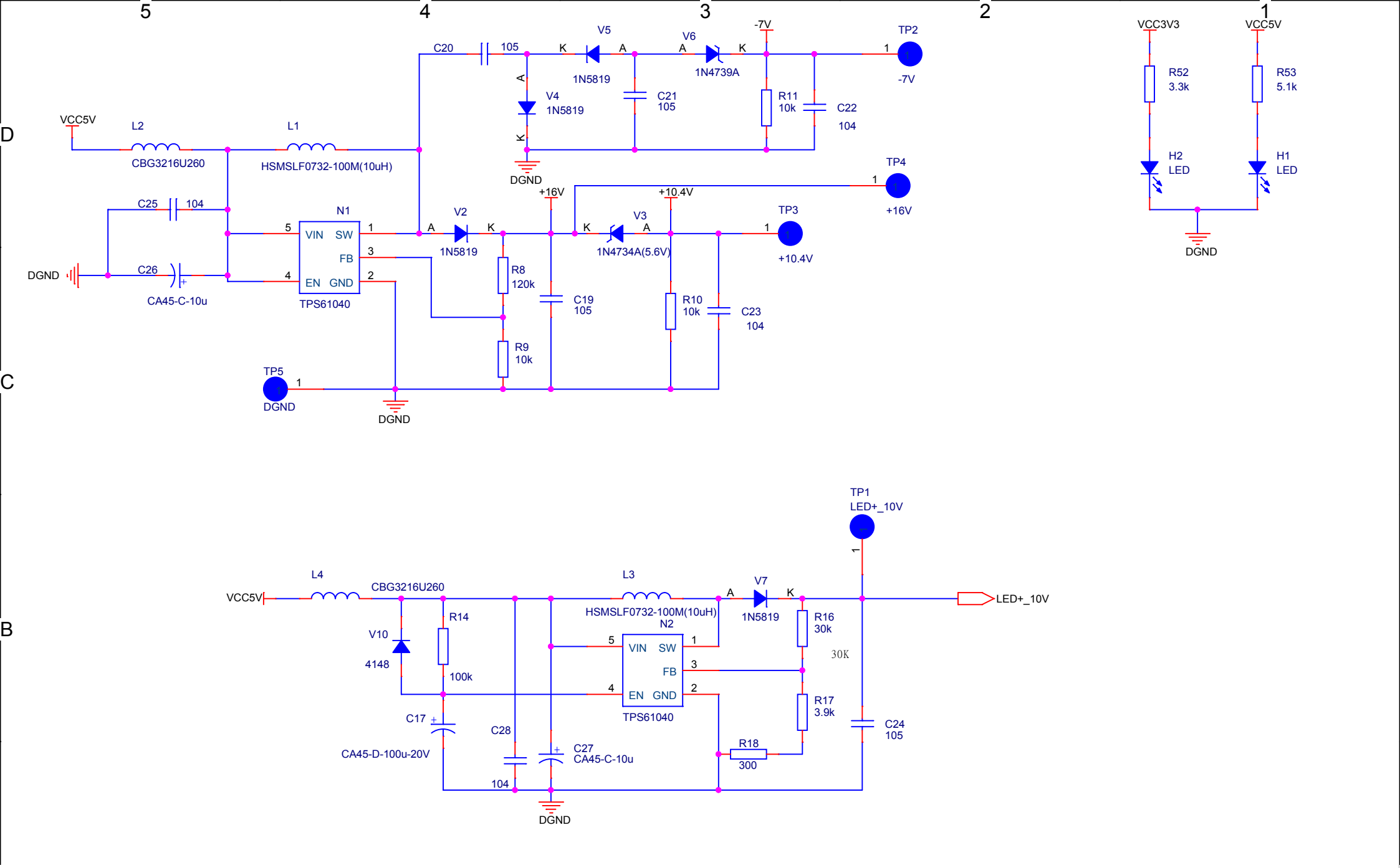

NANJING ChangSheng Instrument CO.,LTD		
Title: CS9931YS 液晶转换板 液晶背光单元电路		
Size: A4	Document Number: <Doc>	Rev: 1.6
Date: Tuesday, May 17, 2016	Sheet 7 of 7	