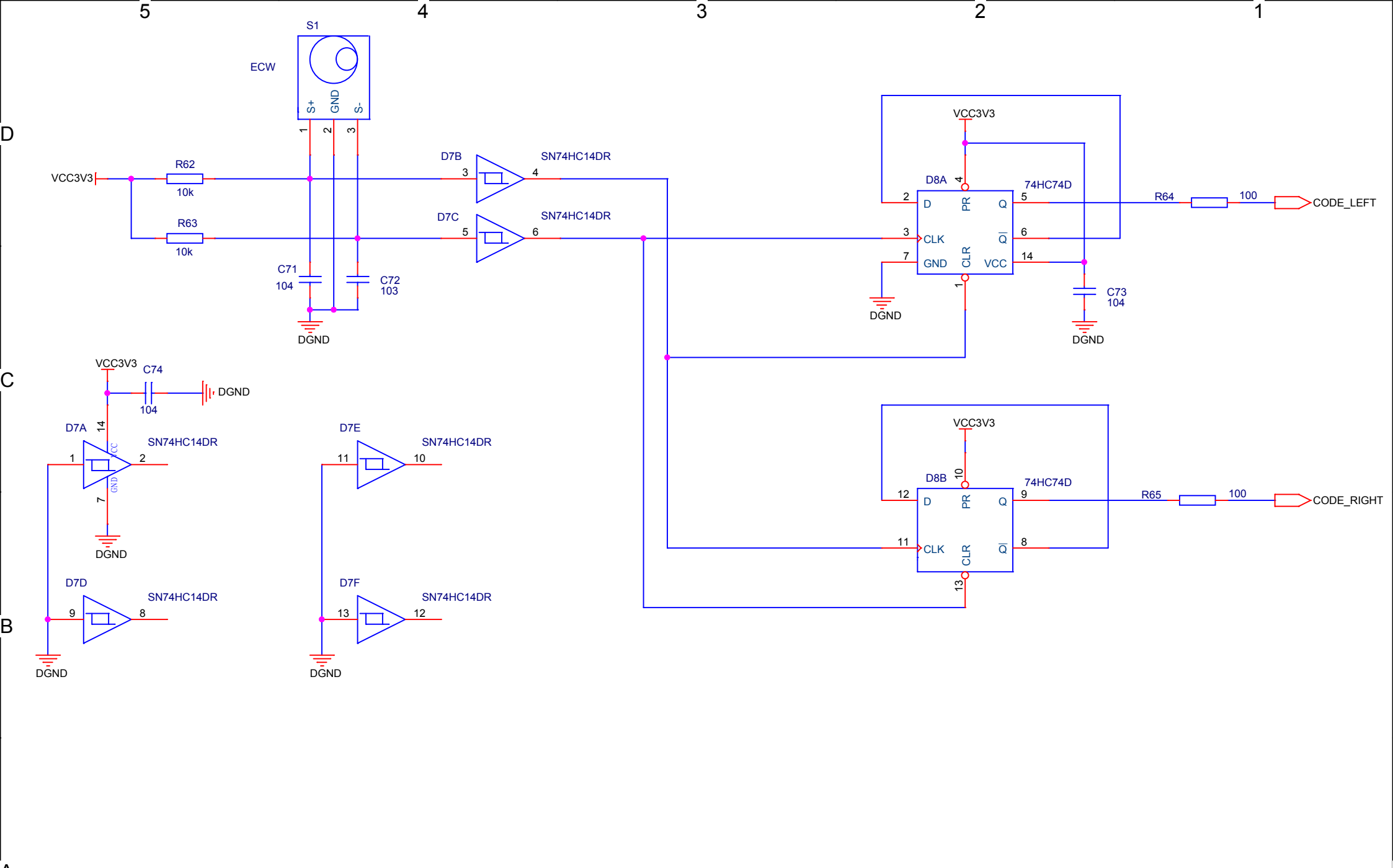

NANJING ChangSheng Instrument CO.,LTD		
Title CS9931YS 液晶转换板 编码开关单元电路		
Size A4	Document Number <Doc>	Rev 1.6
Date: Tuesday, May 17, 2016	Sheet 1 of 7	

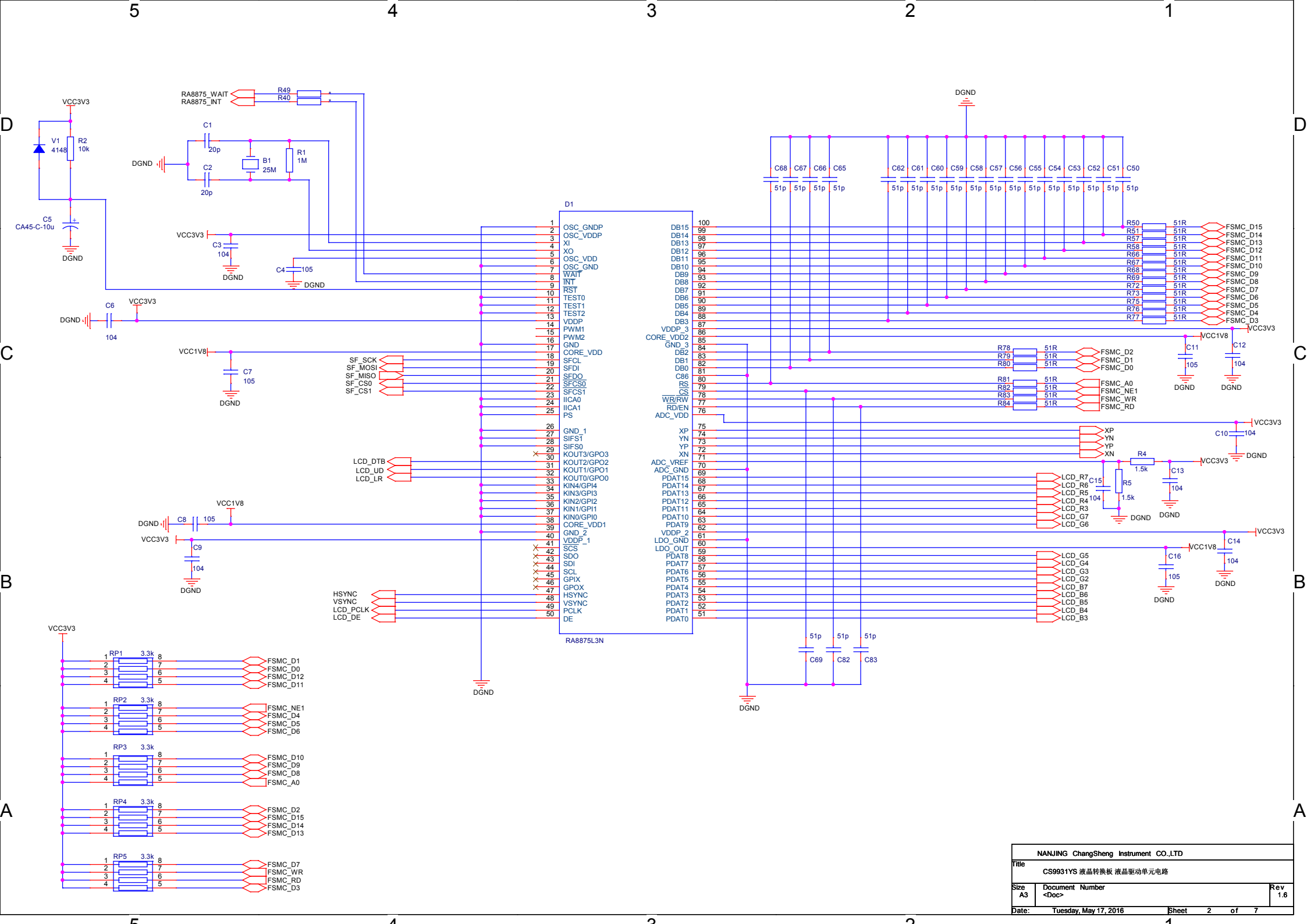

NANJING ChangSheng Instrument CO.,LTD	
Title	CS9931YS 液晶转换板 液晶驱动单元电路
Size A3	Document Number <Doc>
Rev 1.6	
Date: Tuesday, May 17, 2016	Sheet 2 of 7

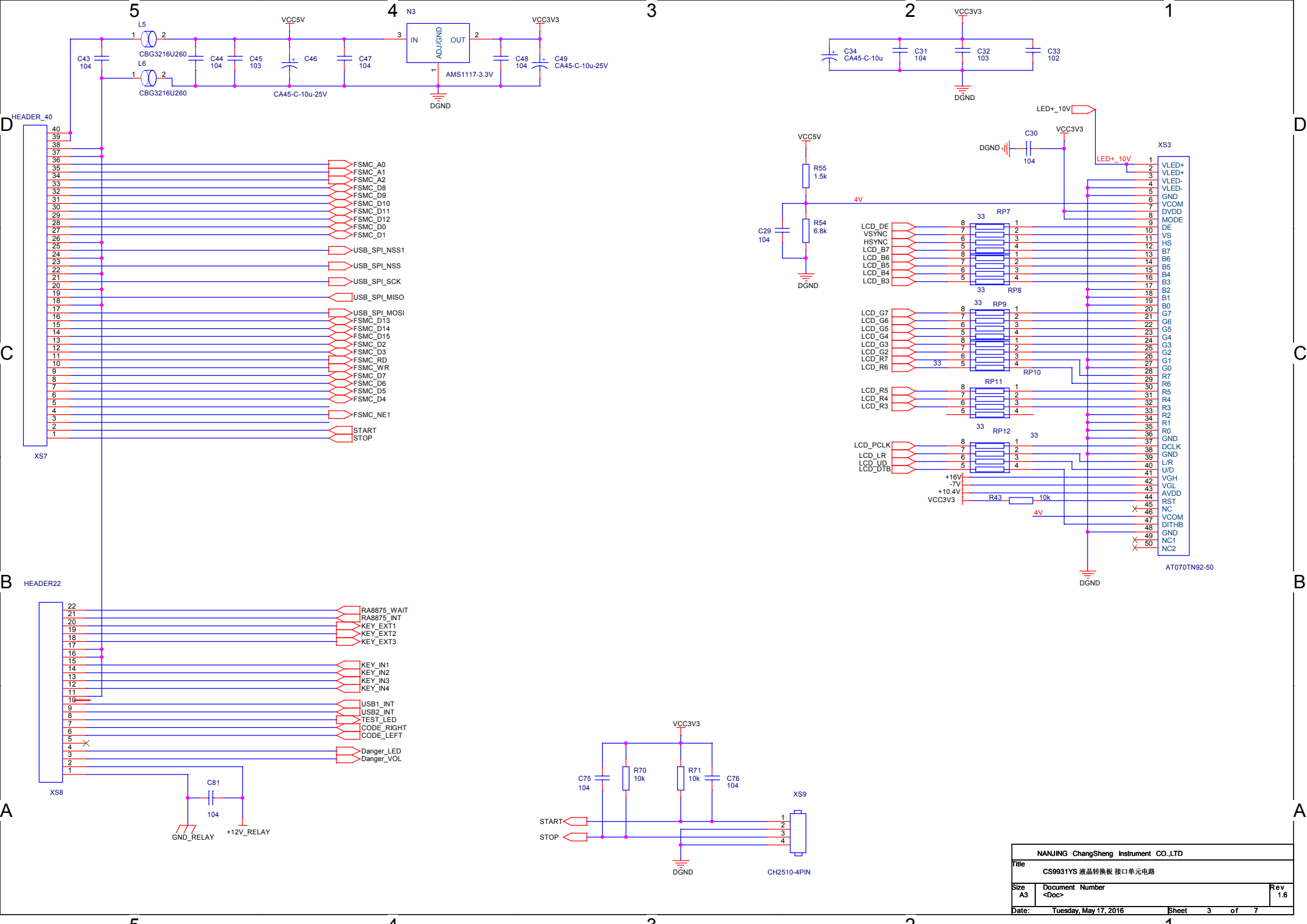
N3
IN
OUT
ADJ/GND
AMS1117-3.3V
VCC5V
VCC3V3
L5
L6
CBG3216U260
C43 104
C44 104
C45 103
C46
C47 104
C48 104
C49 CA45-C-10u-25V
CA45-C-10u-25V
DGND
HEADER_40
XS7
FSMC_A0
FSMC_A1
FSMC_A2
FSMC_D8
FSMC_D9
FSMC_D10
FSMC_D11
FSMC_D12
FSMC_D0
FSMC_D1
USB_SPI_NSS1
USB_SPI_NSS
USB_SPI_SCK
USB_SPI_MISO
USB_SPI_MOSI
FSMC_D13
FSMC_D14
FSMC_D15
FSMC_D2
FSMC_D3
FSMC_RD
FSMC_WR
FSMC_D7
FSMC_D6
FSMC_D5
FSMC_D4
FSMC_NE1
START
STOP
HEADER22
XS8
RA8875_WAIT
RA8875_INT
KEY_EXT1
KEY_EXT2
KEY_EXT3
KEY_IN1
KEY_IN2
KEY_IN3
KEY_IN4
USB1_INT
USB2_INT
TEST_LED
CODE_RIGHT
CODE_LEFT
Danger_LED
Danger_VOL
C81 104
GND_RELAY
+12V_RELAY
C34 CA45-C-10u
C31 104
C32 103
C33 102
LED+_10V
C30 104
R55 1.5k
R54 6.8k
C29 104
4V
RP7
RP8
RP9
RP10
RP11
RP12
33
LCD_DE
VSYNC
HSYNC
LCD_B7
LCD_B6
LCD_B5
LCD_B4
LCD_B3
LCD_G7
LCD_G6
LCD_G5
LCD_G4
LCD_G3
LCD_G2
LCD_R7
LCD_R6
LCD_R5
LCD_R4
LCD_R3
LCD_PCLK
LCD_LR
LCD_UD
LCD_DTB
+16V
-7V
+10.4V
R43 10k
XS3
VLED+
VLED-
GND
VCOM
DVDD
MODE
DE
VS
HS
B7
B6
B5
B4
B3
B2
B1
B0
G7
G6
G5
G4
G3
G2
G1
G0
R7
R6
R5
R4
R3
R2
R1
R0
DCLK
L/R
U/D
VGH
VGL
AVDD
RST
NC
DITHB
NC1
NC2
AT070TN92-50
R70 10k
R71 10k
C75 104
C76 104
XS9
CH2510-4PIN
NANJING ChangSheng Instrument CO.,LTD
Title
CS9931YS 液晶转换板 接口单元电路
Size A3
Document Number <Doc>
Rev 1.6
Date: Tuesday, May 17, 2016
Sheet 3 of 7

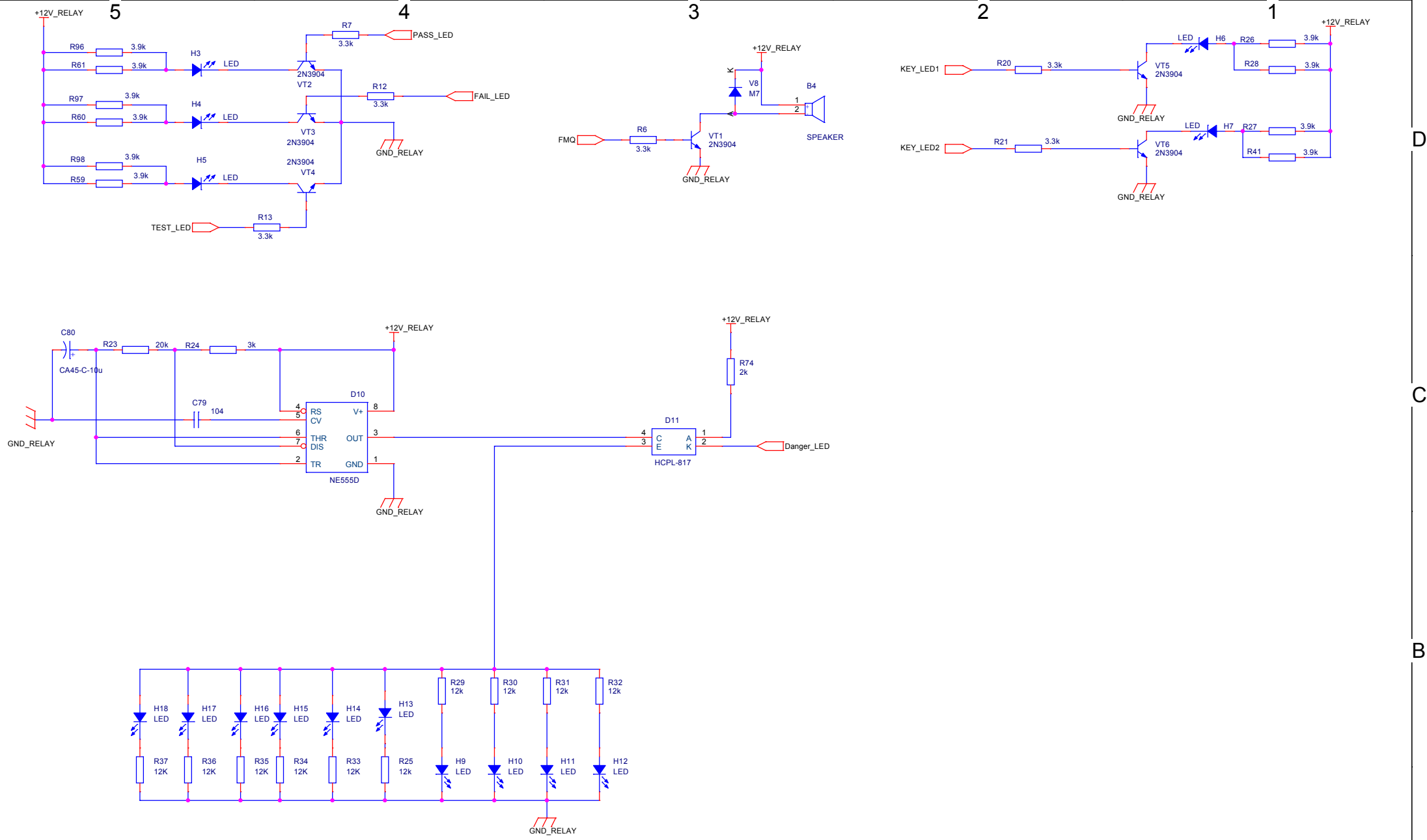

NANJING ChangSheng Instrument CO.,LTD	
Title	CS9931YS 液晶转换板 LED指示灯驱动电路
Size A3	Document Number <Doc>
Rev 1.6	
Date: Tuesday, May 17, 2016	Sheet 4 of 7

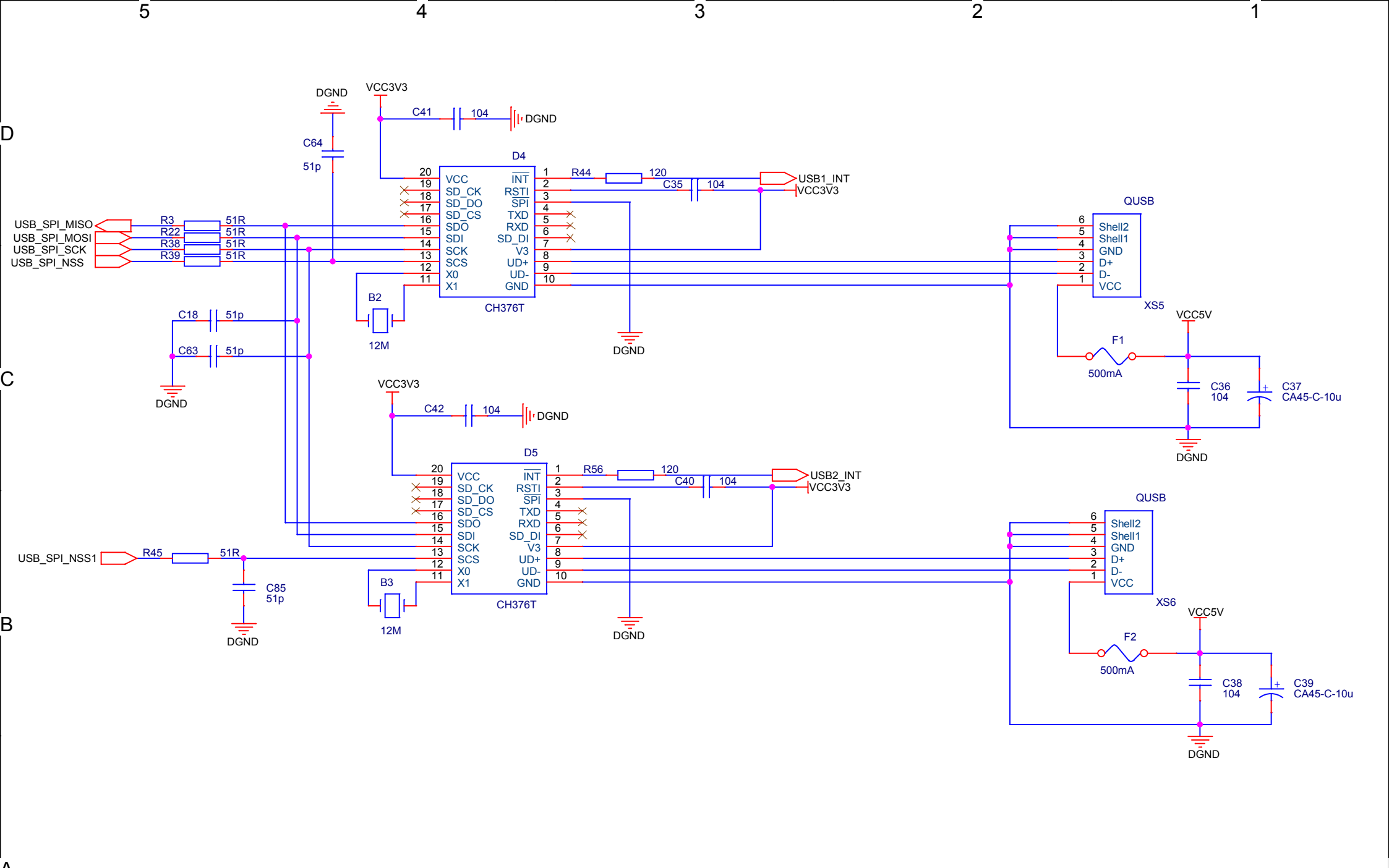

NANJING ChangSheng Instrument CO.,LTD		
Title: CS9931YS 液晶转换板 USB接口单元电路		
Size: A4	Document Number: <Doc>	Rev: 1.6
Date: Tuesday, May 17, 2016	Sheet 5 of 7	

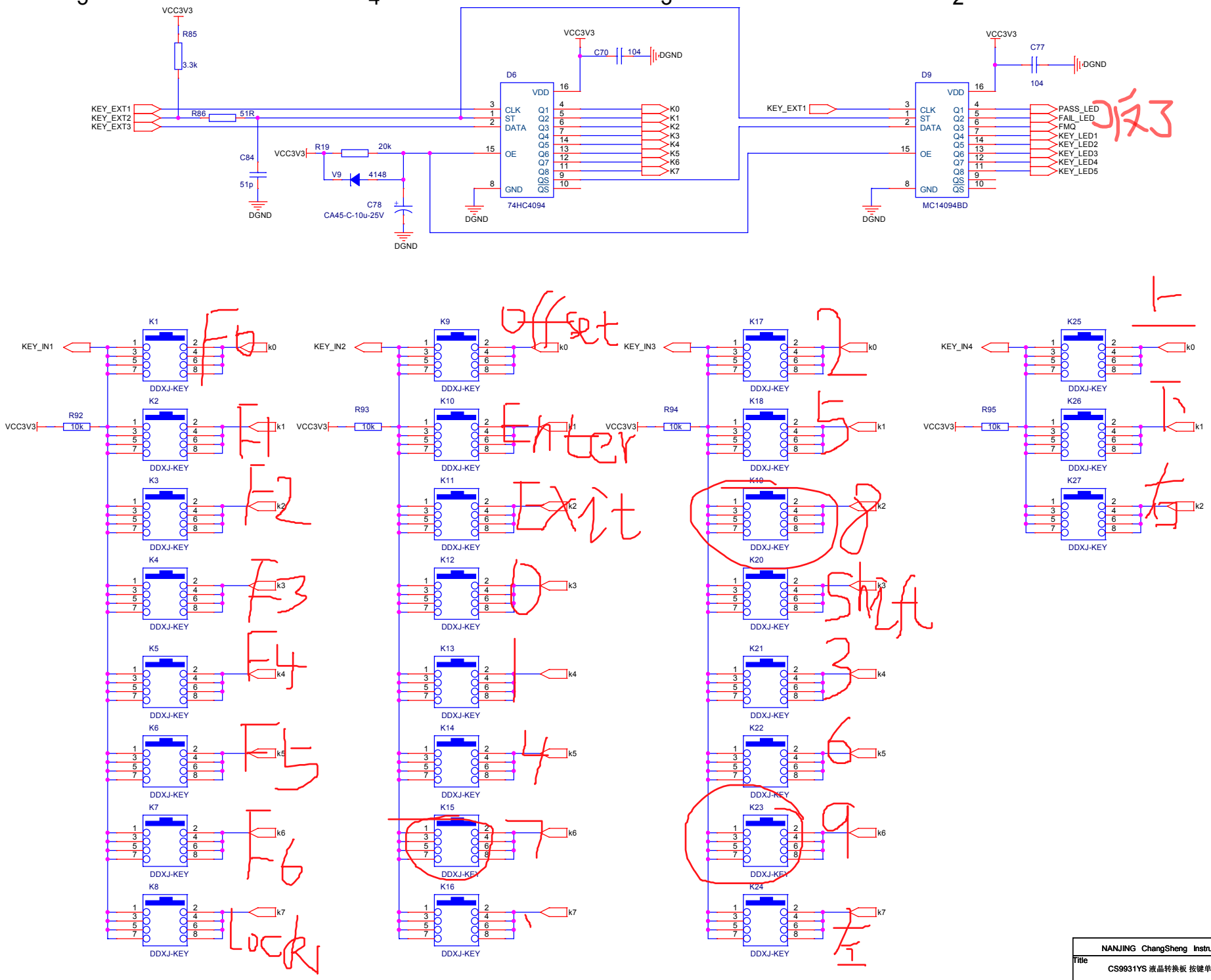

NANJING ChangSheng Instrument CO.,LTD	
Title	CS9931YS 液晶转换板 按键单元电路
Size A3	Document Number <Doc>
Rev 1.6	
Date: Tuesday, May 17, 2016	Sheet 6 of 7

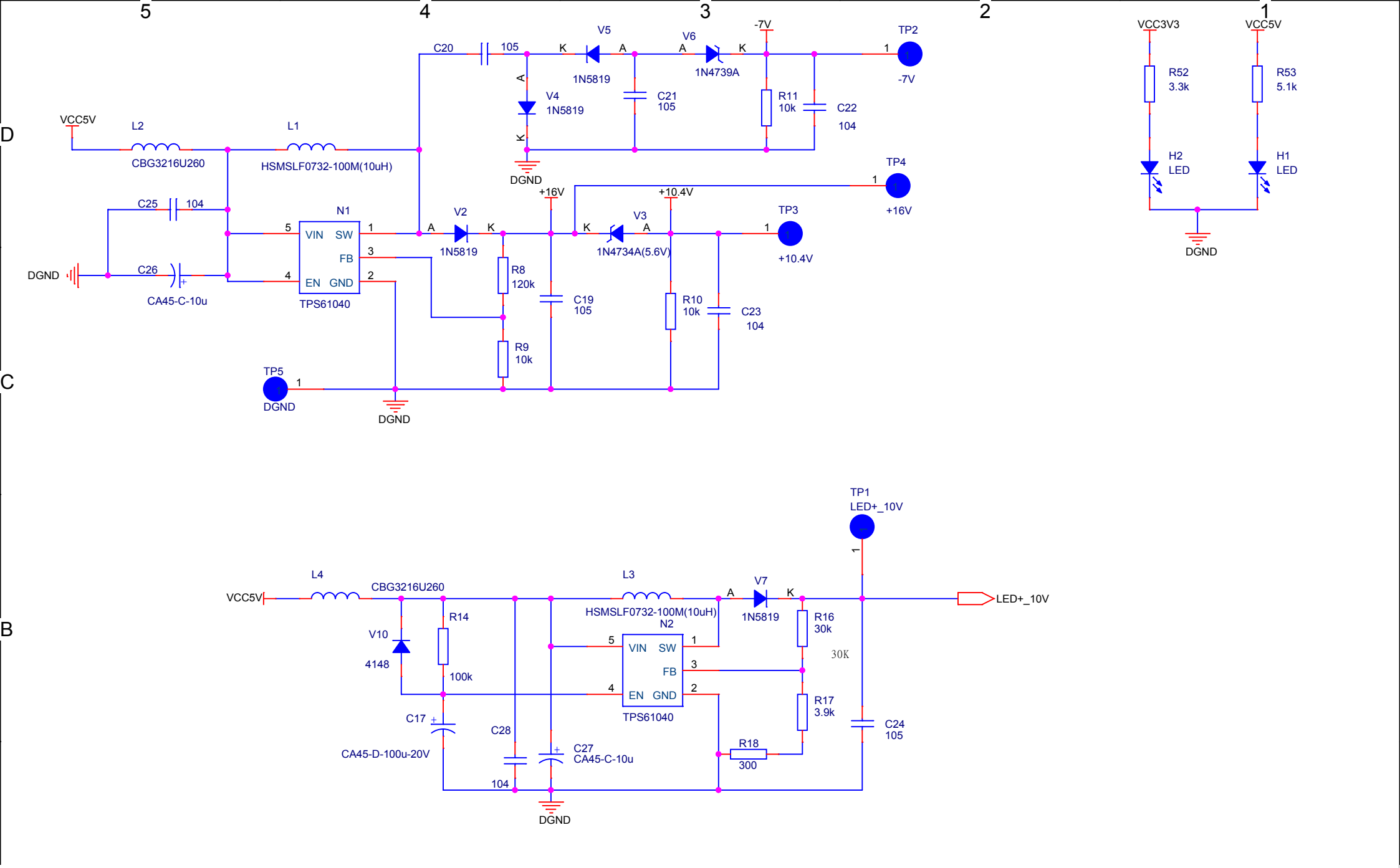

NANJING ChangSheng Instrument CO.,LTD		
Title: CS9931YS 液晶转换板 液晶背光单元电路		
Size: A4	Document Number: <Doc>	Rev: 1.6
Date: Tuesday, May 17, 2016	Sheet 7 of 7	