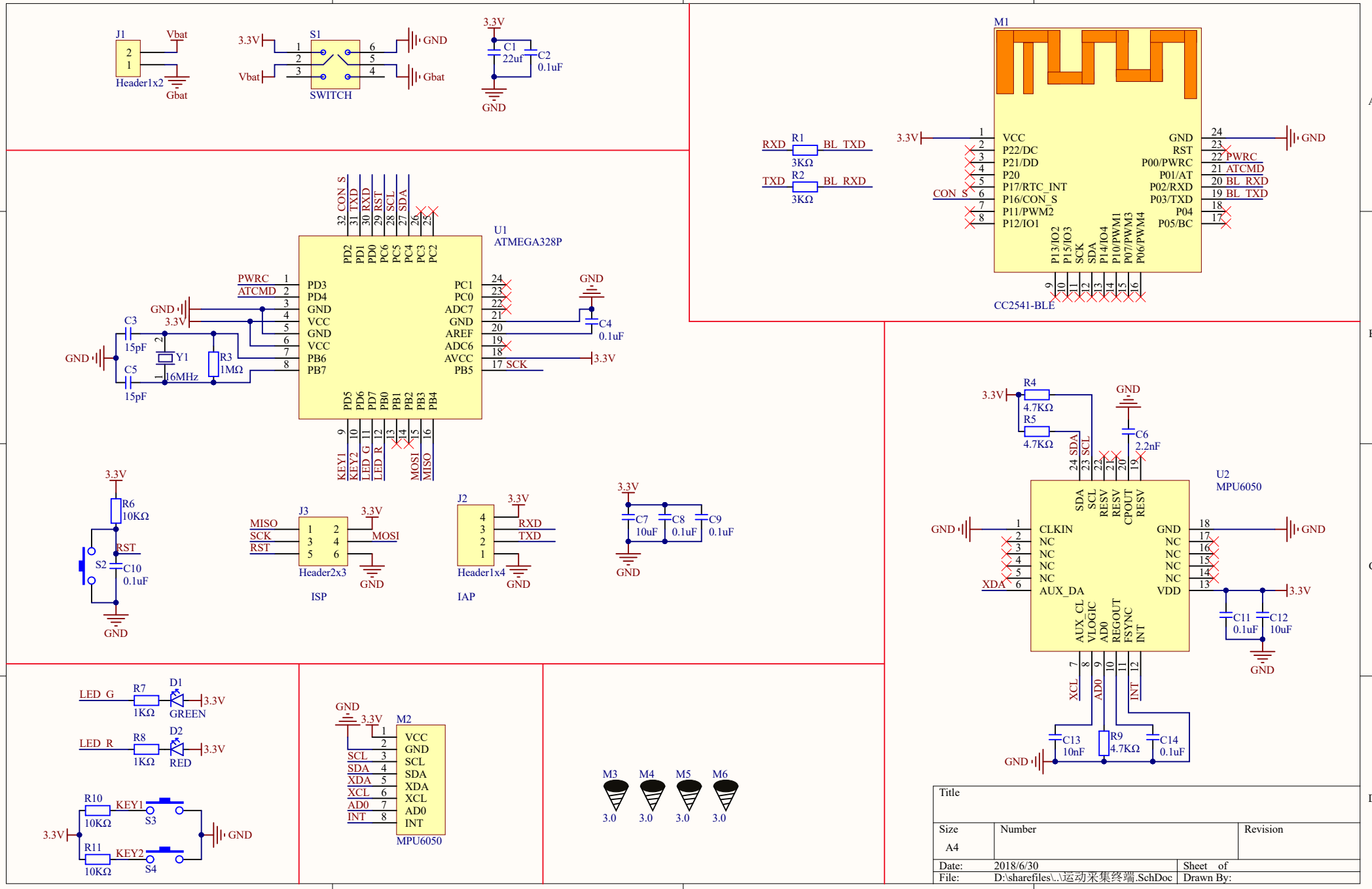
J1
Header1x2
Vbat
Gbat
S1
SWITCH
3.3V
Vbat
GND
Gbat
C1
22uf
C2
0.1uF
M1
CC2541-BLE
VCC
P22/DC
P21/DD
P20
P17/RTC_INT
P16/CON_S
P11/PWM2
P12/IO1
GND
RST
P00/PWRC
P01/AT
P02/RXD
P03/TXD
P04
P05/BC
P13/IO2
P15/IO3
SCK
SDA
P14/IO4
P10/PWM1
P07/PWM3
P06/PWM4
RXD
TXD
R1
R2
3KΩ
BL_TXD
BL_RXD
CON_S
PWRC
ATCMD
U1
ATMEGA328P
PD3
PD4
GND
VCC
PB6
PB7
PC1
PC0
ADC7
AREF
ADC6
AVCC
PB5
SCK
C3
15pF
C5
15pF
Y1
16MHz
R3
1MΩ
C4
0.1uF
KEY1
KEY2
LED_G
LED_R
MOSI
MISO
R6
10KΩ
S2
C10
0.1uF
J3
Header2x3
ISP
J2
Header1x4
IAP
RXD
TXD
C7
10uF
C8
0.1uF
C9
0.1uF
R4
4.7KΩ
R5
4.7KΩ
C6
2.2nF
U2
MPU6050
CLKIN
NC
AUX_DA
VDD
SDA
SCL
RESV
CPOUT
AUX_CL
VLOGIC
AD0
REGOUT
FSYNC
INT
XCL
XDA
C11
0.1uF
C12
10uF
C13
10nF
R9
4.7KΩ
C14
0.1uF
LED_G
R7
1KΩ
D1
GREEN
LED_R
R8
1KΩ
D2
RED
R10
10KΩ
KEY1
S3
R11
10KΩ
KEY2
S4
M2
MPU6050
M3
M4
M5
M6
3.0
Title
Size
A4
Number
Revision
Date: 2018/6/30
Sheet of
File: D:\sharefiles\..\运动采集终端.SchDoc
Drawn By:

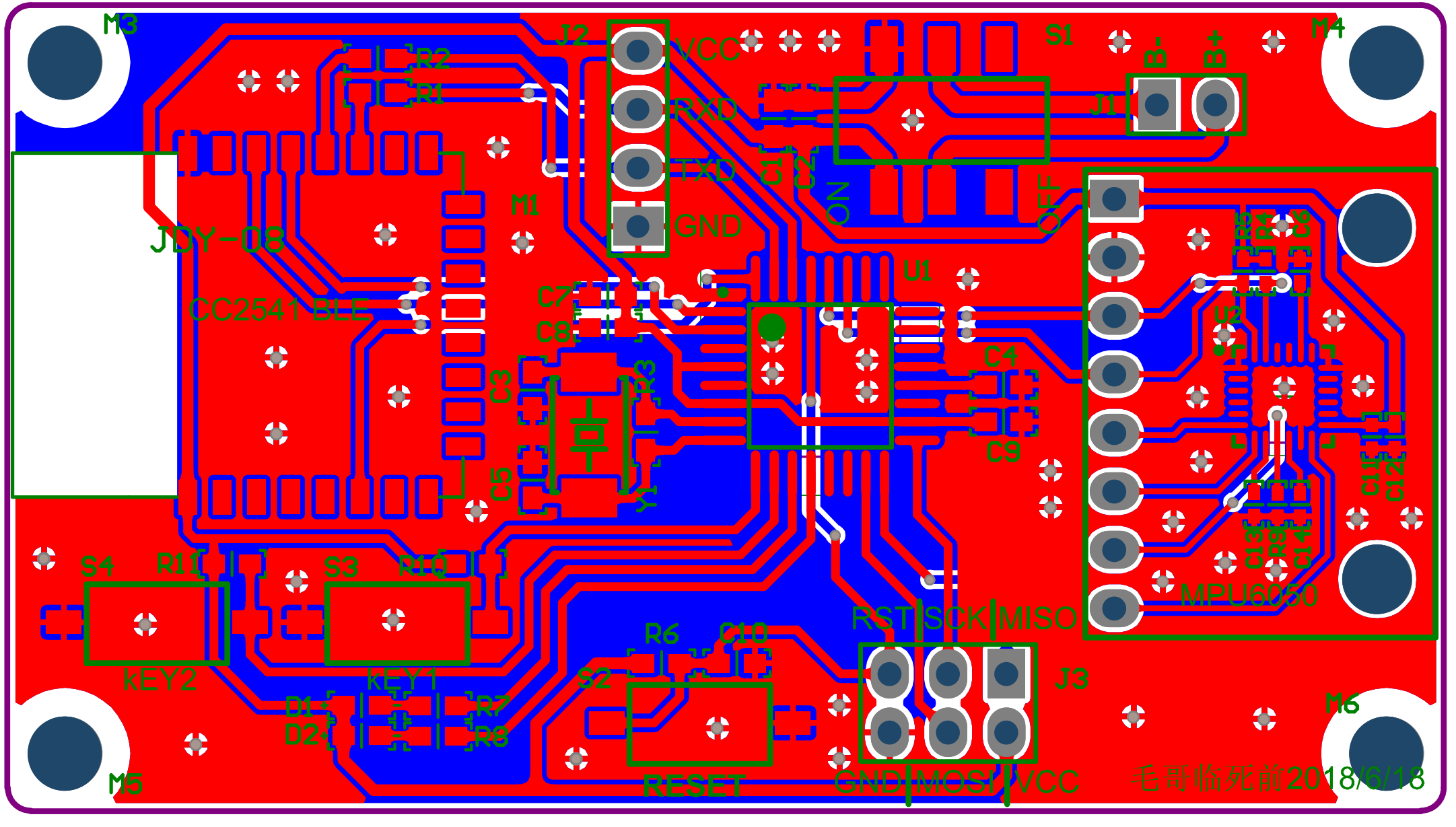
M3
M4
M5
M6
J2
VCC
RXD
TXD
GND
S1
B-
B+
J1
ON
OFF
R2
R1
M1
JDY-08
CC2541 BLE
C7
C8
C3
C5
Y1
U1
C4
C9
U2
MPU6050
C11
C12
C13
C14
C15
S4
R11
S3
R10
KEY2
KEY1
D1
D2
R7
R3
R6
C10
S2
RESET
RST|SCK|MISO
J3
GND|MOSI|VCC
毛哥临死前2018/6/18