INDEX

P01: INDEX-HISTORY
P02: BLOCK
P03: PIO ASSIGNMENT
P04: POWER TREE
P05: CPU1
P06: CPU2
P07: POWER/PMU
P08: POWER/DCDC
P09: BESIDE CPU
P10: LCD-LVDS-HDMI
P11: CSI-TVIN-VGA-CVBS
P12: USB-CARD0/2-SDIOWIFI
P13: UART0-JTAG-EMAC
P14: DRAM3
P15: NAND-SATA
P16: HP-LINEIN-MIC
P17: KEY-IR-PIO-GS-CTP

HISTORY

版本	修改日期	修改内容
A10-EVB-V1	2011-5-18	1、删去NOR、CARD2及MS。增加CARD1。 2、SPDIF换成莲花座。 3、MIC增加至两路， 4、调整PIO配置尽量与标案一致。 5、PIO扩展座考虑电容屏、电子罗盘、陀螺仪等扩展。 6、增加CVBS座，调整TVIN PIN配置。 7、RT9266换成SY7208。 8、USB0/1/2加电流控制，USB1/2改为从MP1482取电。 9、增加SATA功能。 10、电源功率电感选用CD43，1.5—2A。 11、去掉UART2的DB9插座。
	2011-5-23	删去UART2、SPDIF、IIS、PS2， 增加了GPS、BLUETOOTH等GPIO配置。 详见PIO ASSIGNMENT
	2011-5-24	1、USB0-IDDET增加47K上拉。 2、VGA-R，VGA-G，VGA-B增加75R匹配电阻。 3、CVBS增加Fillter。 4、CSI0、CSI1增加5V。
A10-EVB-V1.1	2011-6-1	1、HDMI的HSCL和HSDA增加2K2上拉至5V。
A10-EVB-V1.2	2011-7-13	1、增加GSensor。 2、改用7" 800*480 LCD。 3、与PAD-STD-V115同步更新。
A10-EVB-V1.2-20110726	2011-7-26	1、DRAM_R1改为160K-1%，DRAM-VCC为1.56V。 2、R8改为10K，R9改为20K。

BLOCK

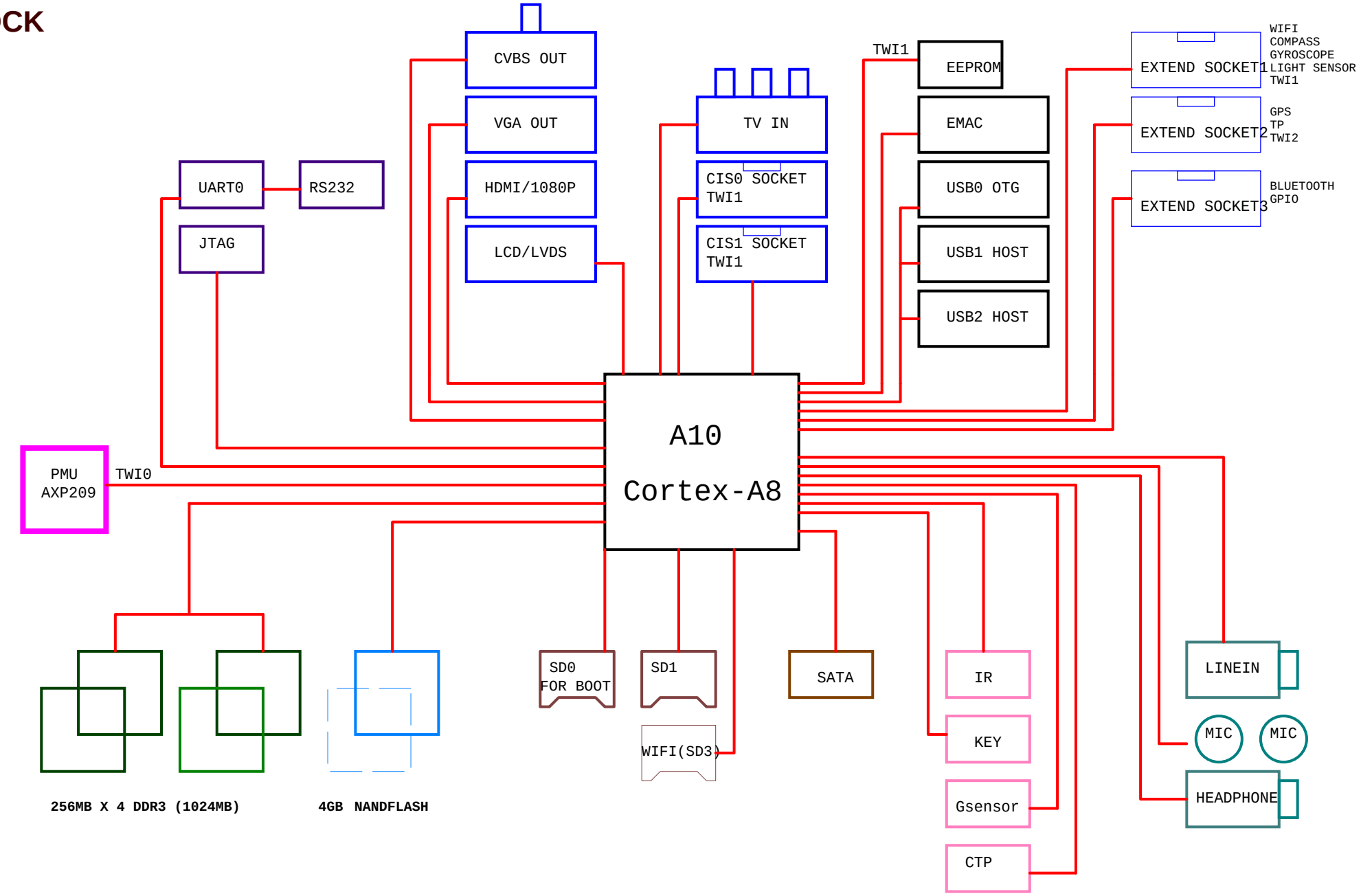

AllWinner Technology Co.,Ltd		
Design Name: A10-EVB-V1-2		
Size: A3	Page Name: BLOCK	Rev: 1.0
Date: Tuesday, July 26, 2011	Sheet 2 of 17	

PIO ASSIGNMENT

Pin Group	Pin Name	Define	Function
PA(18)	PA0	ERXD3	EMAC
	PA1	ERXD2	
	PA2	ERXD1	
	PA3	ERXD0	
	PA4	ETXD3	
	PA5	ETXD2	
	PA6	ETXD1	
	PA7	ETXD0	
	PA8	ERXCK	
	PA9	ERXERR	
	PA10	ERXDV	
	PA11	EMDC	
	PA12	EMDIO	
	PA13	ETXEN	
	PA14	ETXCK	
	PA15	ECRS	
	PA16	ECOL	
	PA17	ERESET#	
PB(24)	PB0	TWI0_SCK	TWI0
	PB1	TWI0_SDA	
	PB2	PWM0	PWM
	PB3	CP-RST#	COMPASS
	PB4	IR0_RX	IR
	PB5	BT-RST#	BLUETOOTH
	PB6	BT-PCM-CLK	
	PB7	BT-PCM-SYNC	
	PB8	BT-PCM-OUT	
	PB9	PB9	USB0-DRV
	PB10	PB10	LCD0-SCK
	PB11	PB11	LCD0-SDA
	PB12	BT-PCM-IN	BLUETOOTH
	PB13	PB13	TP-WAKEUP
	PB14	JTAG_MS0	JTAG
	PB15	JTAG_CK0	
	PB16	JTAG_DO0	
	PB17	JTAG_DI0	
	PB18	TWI1_SCK	TWI1
	PB19	TWI1_SDA	
	PB20	TWI2_SCK	TWI2
	PB21	TWI2_SDA	
	PB22	UART0_TX	UART0
	PB23	UART0_RX	

Pin Group	Pin Name	Define	Function
PC(25)	PC0	NWE#	NAND
	PC1	NALE	
	PC2	NCLE	
	PC3	NCE1	
	PC4	NCE0	
	PC5	NRE#	
	PC6	NRB0	
	PC7	NRB1	
	PC8	NDQ0	
	PC9	NDQ1	
	PC10	NDQ2	
	PC11	NDQ3	
	PC12	NDQ4	
	PC13	NDQ5	
	PC14	NDQ6	
	PC15	NDQ7	
	PC16	NWP	
	PC17	NCE2	
	PC18	NCE3	
	PC19	GPS-SCS	GPS
	PC20	GPS-SCLK	
	PC21	GPS-MOSI	
	PC22	GPS-VCC-EN	
	PC23	NC	
	PC24	NDQS	
PD(28)	PD0	LCD0_D0	LCD LVDS
	PD1	LCD0_D1	
	PD2	LCD0_D2	
	PD3	LCD0_D3	
	PD4	LCD0_D4	
	PD5	LCD0_D5	
	PD6	LCD0_D6	
	PD7	LCD0_D7	
	PD8	LCD0_D8	
	PD9	LCD0_D9	
	PD10	LCD0_D10	
	PD11	LCD0_D11	
	PD12	LCD0_D12	
	PD13	LCD0_D13	
	PD14	LCD0_D14	
	PD15	LCD0_D15	
	PD16	LCD0_D16	
	PD17	LCD0_D17	

Pin Group	Pin Name	Define	Function
PD(28)	PD18	LCD0_D18	LCD
	PD19	LCD0_D19	
	PD20	LCD0_D20	
	PD21	LCD0_D21	
	PD22	LCD0_D22	
	PD23	LCD0_D23	
	PD24	LCD0_CLK	
	PD25	LCD0_DE	
	PD26	LCD0_HSYNC	
	PD27	LCD0_VSYNC	
PE(12)	PE0	CSI0_PCLK	CSI0
	PE1	CSI0_MCLK	
	PE2	CSI0_HSYNC	
	PE3	CSI0_VSYNC	
	PE4	CSI0_D0	
	PE5	CSI0_D1	
	PE6	CSI0_D2	
	PE7	CSI0_D3	
	PE8	CSI0_D4	
	PE9	CSI0_D5	
	PE10	CSI0_D6	
	PE11	CSI0_D7	
PF(6)	PF0	SDC0_D1	SDC0
	PF1	SDC0_D0	
	PF2	SDC0_CLK	
	PF3	SDC0_CMD	
	PF4	SDC0_D3	
	PF5	SDC0_D2	
PG(12)	PG0	CSI1_PCLK	CSI1
	PG1	CSI1_MLCK	
	PG2	CSI1_HSYNC	
	PG3	CSI1_VSYNC	
	PG4	CSI1_D0	
	PG5	CSI1_D1	
	PG6	CSI1_D2	
	PG7	CSI1_D3	
	PG8	CSI1_D4	
	PG9	CSI1_D5	
	PG10	CSI1_D6	
	PG11	CSI1_D7	

Pin Group	Pin Name	Define	Function
PH(28)	PH0	EINT0	GS-INT1
	PH1	EINT1	SD0-DET#
	PH2	EINT2	SD1-DET#
	PH3	EINT3	USB2-DRV
	PH4	EINT4	USB0-IDDET
	PH5	EINT5	USB0-VBUSDET
	PH6	MS-BS	USB1-DRV
	PH7	MS-CLK	LCD-BL
	PH8	MS-D0	LCD-PWR
	PH9	MS-D1	WIFI-SHDN#
	PH10	MS-D2	WIFI-WAKEUP
	PH11	MS-D3	SD3-DET#
	PH12	EINT12	WIFI-PWR
	PH13	EINT13	CSI0-RST#
	PH14	EINT14	CSI1-RST#
	PH15	EINT15	PA-SHDN#
	PH16	EINT16	CSI0-PWR
	PH17	EINT17	CSI1-PWR
	PH18	EINT18	GY-INT1
	PH19	EINT19	GY-INT2
	PH20	EINT20	LS-INT
	PH21	EINT21	TP-INT
	PH22	SDC1_CMD	SDC1
	PH23	SDC1_CLK	
	PH24	SDC1_D0	
	PH25	SDC1_D1	
	PH26	SDC1_D2	
	PH27	SDC1_D3	
PI(22)	PI0	GPS_CLK	GPS
	PI1	GPS_SIGN	
	PI2	GPS_MAG	
	PI3	PI3	
	PI4	SDC3_CMD	CARD3 WIFI
	PI5	SDC3_CLK	
	PI6	SDC3_D0	
	PI7	SDC3_D1	
	PI8	SDC3_D2	
	PI9	SDC3_D3	
	PI10	PI10	GS-INT2
	PI11	PI11	
	PI12	PI12	
	PI13	CP-INT	

Pin Group	Pin Name	Define	Function
PI(22)	PI14	PI14	GPS-OSC-EN
	PI15	PI15	GPS-RX-EN
	PI16	BT-UART-RTS	BLUETOOTH
	PI17	BT-UART-CTS	
	PI18	BT-UART-TX	
	PI19	BT-UART-RX	
	PI20	BT-GPIO0	
	PI21	BT-GPIO1	

AllWinner Technology Co.,Ltd

Design Name: A10-EVB-V1-2

Size: A3 | Page Name: PIO ASSIGNMENT | Rev: 1.0

Date: Tuesday, July 26, 2011 | Sheet 3 of 17

POWER TREE

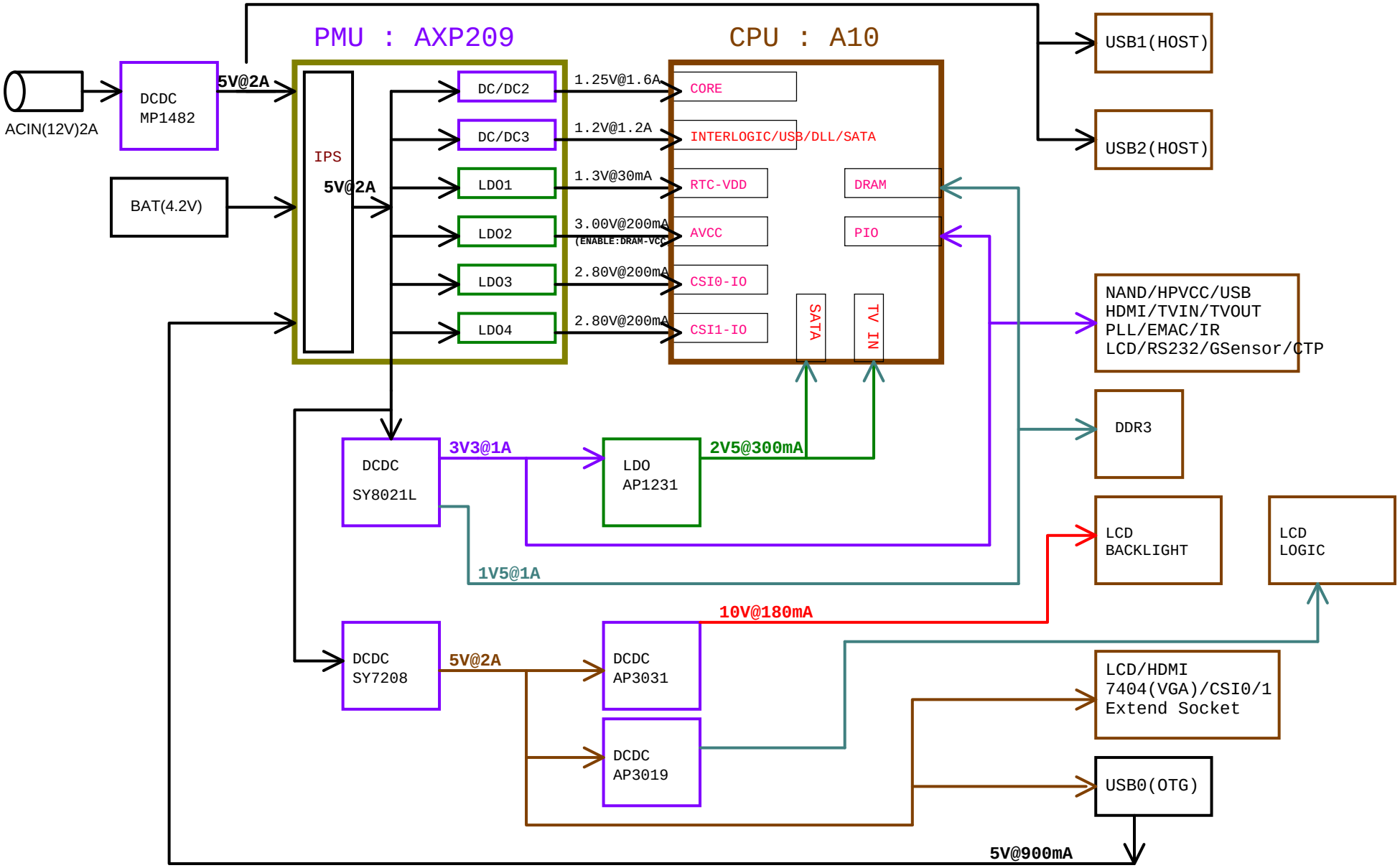

AllWinner Technology Co.,Ltd			
Design Name	A10-EVB-V1-2		
Size A3	Page Name POWER TREE		Rev 1.0
Date: Tuesday, July 26, 2011	Sheet 4 of 17		

CPU1

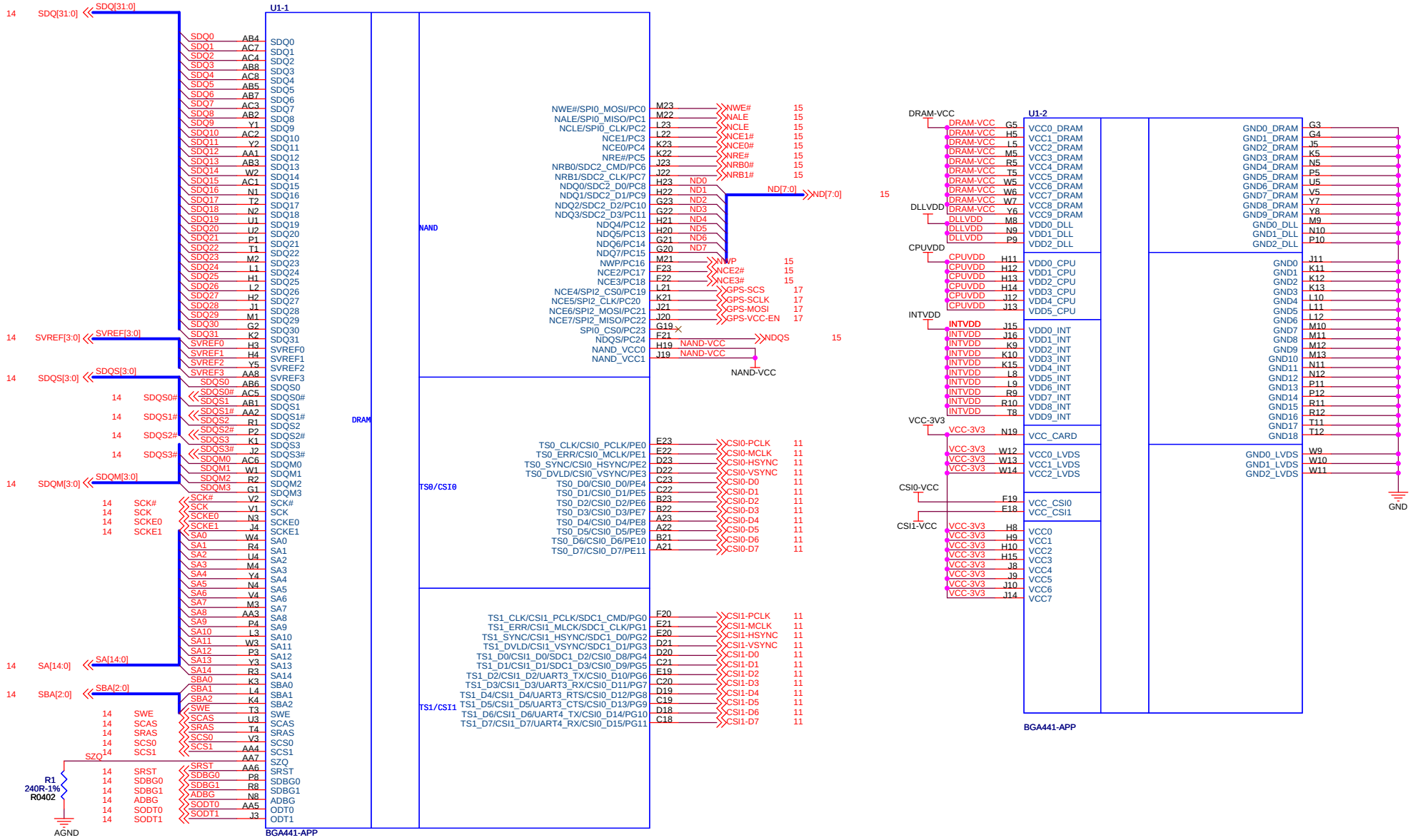

AllWinner Technology Co.,Ltd			
Design Name: A10-EVB-V1-2			
Size: A3	Page Name: CPU1		Rev: 1.0
Date: Tuesday, July 26, 2011	Sheet 5 of 17		

CPU2

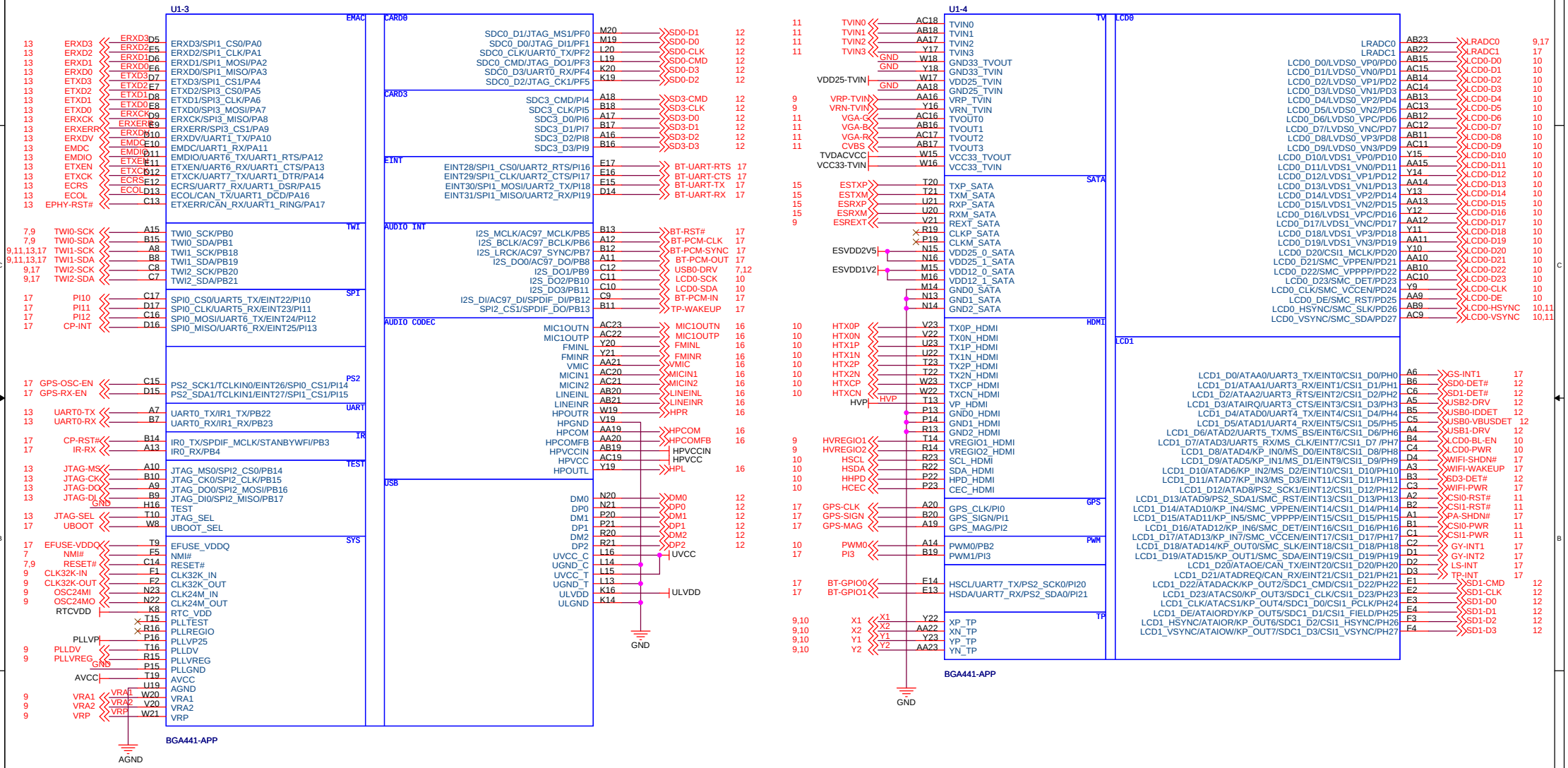

AllWinner Technology Co.,Ltd	
Design Name	A10-EVB-V1-2
Size A3	Page Name CPU2
Rev	1.0
Date:	Tuesday, July 26, 2011
Sheet	6 of 17

POWER/PMU

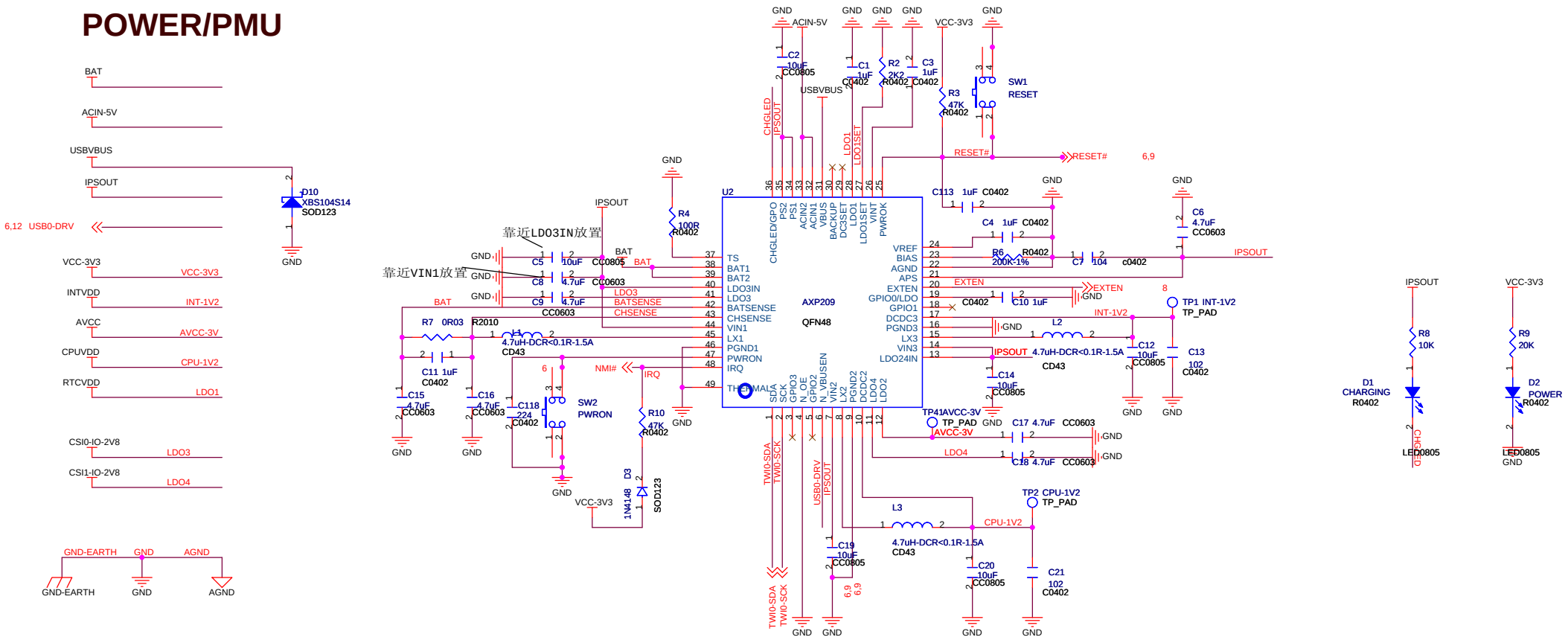

电源分配表：

电源名称	输出电压	最大供电能力	预计谁在用
AXP209 DCDC2	1.25V	1600mA	CPU CORE VDD
AXP209 DCDC3	1.2V	1200mA	CPU INTERLOGIC VDD/USB/DLL/SATA
AXP209 LDO1	1.3V	30mA	RTC
AXP209 LDO2	3V	200mA	AVCC (ENABLE:5V/3V3/2V5)
AXP209 LDO3	2.8V	400mA	CSI0-IO
AXP209 LDO4	2.8V	200mA	CSI1-IO
SY8021L DCDC1	3.3V	1000mA	NAND/HPVCC/USB/HDMI/TVIN/TVOUT/PIO/PLL/ EMAC/IR/LCD/RS232/AP1231
SY8021L DCDC2	1.5V	1000mA	DDR3
AP1231	2.5V	300mA	TVIN/SATA
SY7208	5V	2000mA	HDMI/USB0/LCD/Extend Socket/CSI Socket/7404(VGA)
MP1482DS	5V	2000mA	PMU/USB1/USB2

AXP209说明：

DCDC2 0.7-2.27V 可调/1.6A Max---默认电压可设置
DCDC3 0.7-3.5V 可调/1.2A Max--默认电压可设置
LDO2 1.8-3.3V可调/200mA--默认电压可设置
LDO3 0.7-3.5V可调/400mA Max---默认电压可设置
LDO4 1.25V-3.3V可调/200mA Max--默认电压可设置
GPIO-LDO 1.8-3.5V可调 50mA Max --需开机设置输出电压
DC3SET ---DCDC3输出电压设置PIN
LDO1SET ---LDO1输出电压设置PIN
PWM Charger 1.8A Max

DC3SET 高电平接APS
LDO1SET 高电平接VINT

DC3SET	DCDC3 Voltage
HIGH	3.3V
LOW	1.8V
Floating	1.2V

LDO1SET	LDO1 Voltage
HIGH	3.3V
LOW	1.3V

AllWinner Technology Co.,Ltd

Design Name: A10-EVB-V1-2

Size: A3 | Page Name: POWER/PMU | Rev: 1.0

Date: Tuesday, July 26, 2011 | Sheet 7 of 17

ACIN

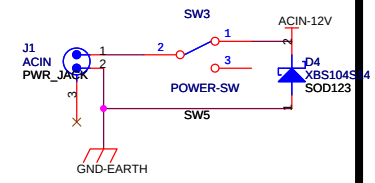

12V TO 5V FOR PMU

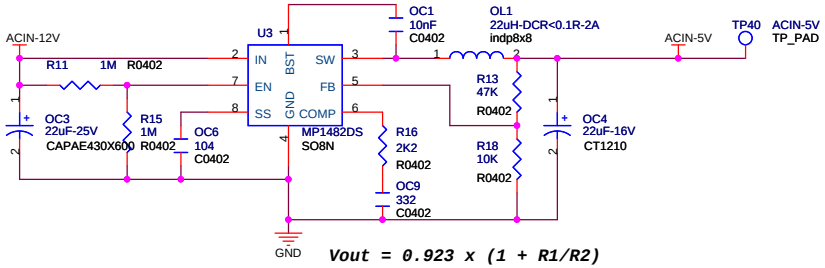

Vout = 0.923 x (1 + R1/R2)
R2 < 100K

BATTARY IN

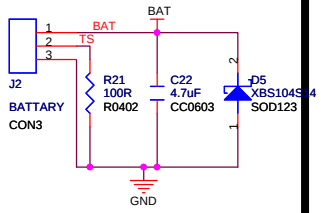

此时不支持电池温度检测

IPSOUT TO 5V FOR SYS

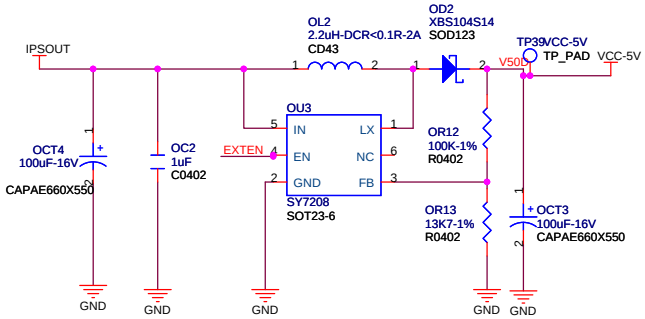

Vout = 0.6(1+R1/R2)*

DC OUT

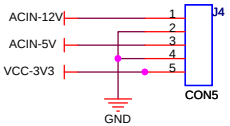

3V3-1V5

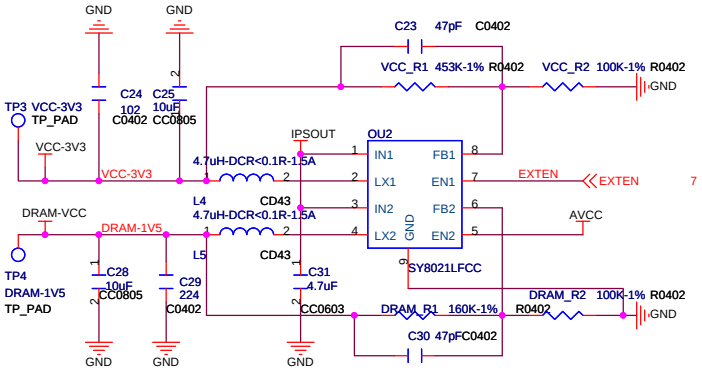

Vout = 0.6(1+R1/R2)*

2V5

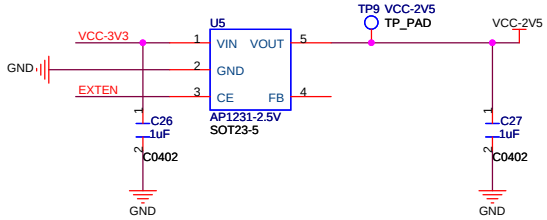

AllWinner Technology Co.,Ltd		
Design Name: A10-EVB-V1-2		
Size: A3	Page Name: POWER/DCDC	Rev: 1.0
Date: Tuesday, July 26, 2011	Sheet 8 of 17	

DRAM-DLL

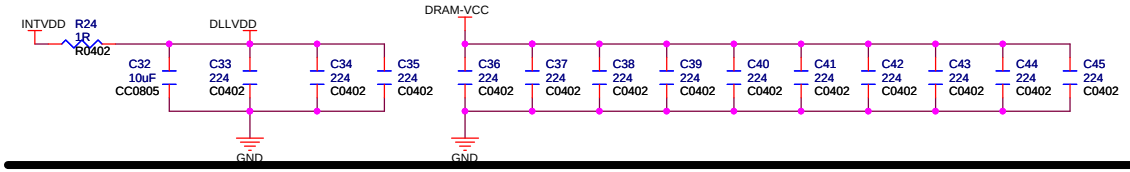

PLL-NAND

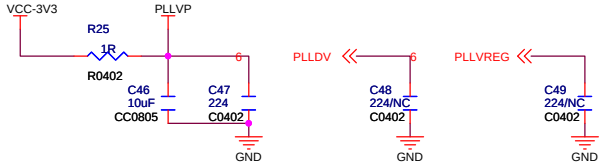

CRYSTAL

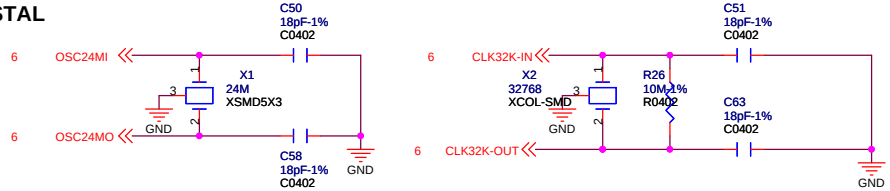

INTERLOGIC

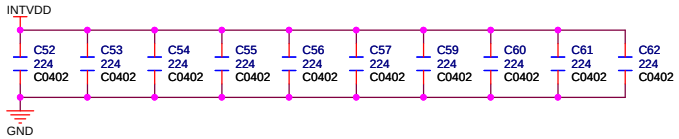

AUDIO-TP

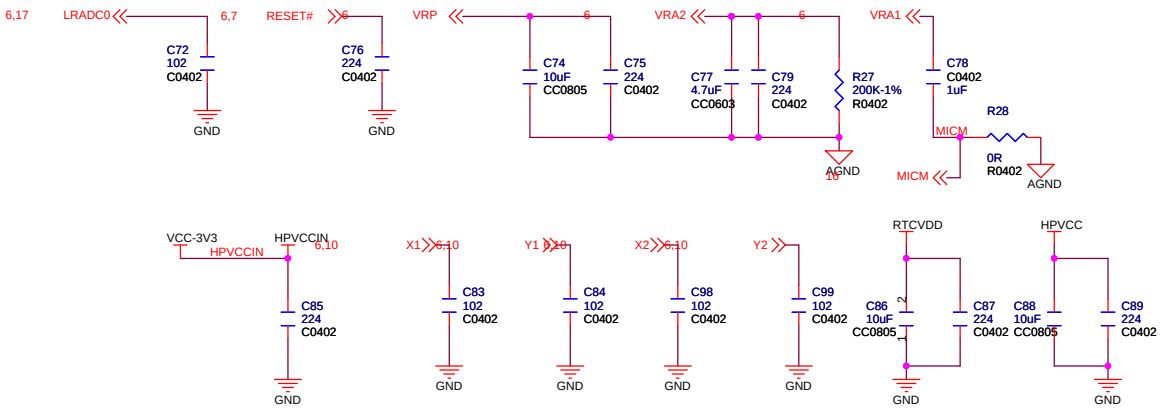

PIO-INTFACE

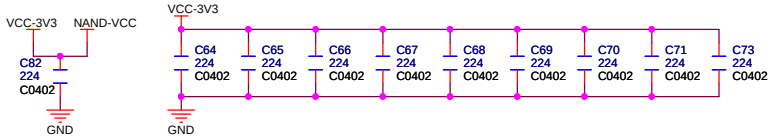

SATA

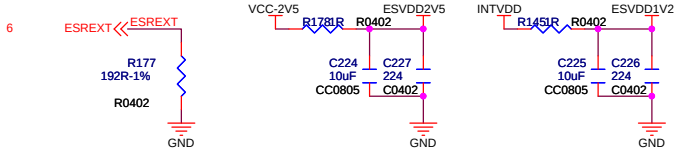

CSI-TV

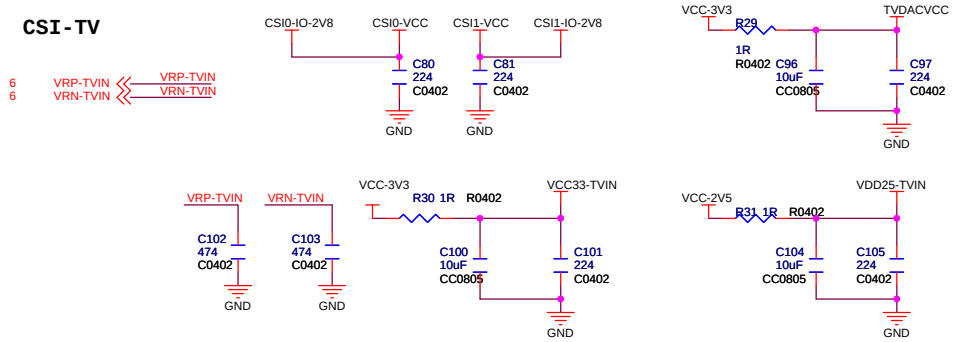

USB-CPU

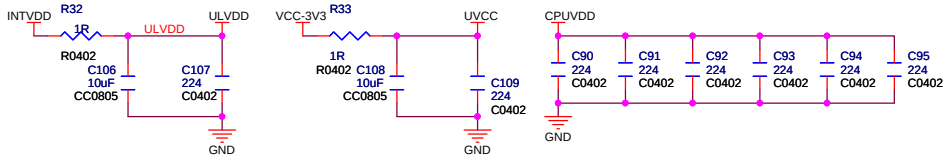

HDMI

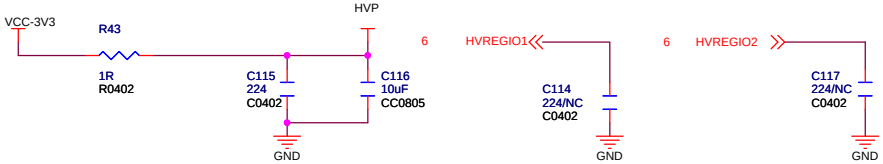

OTHERS

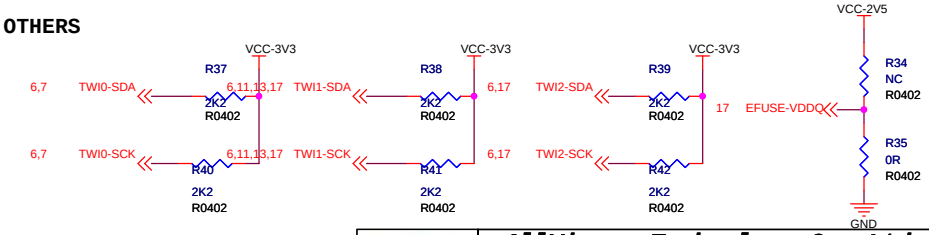

AllWinner Technology Co.,Ltd			
Design Name	A10-EVB-V1-2		
Size A3	Page Name BESIDE CPU		Rev 1.0
Date: Tuesday, July 26, 2011	Sheet 9 of 17		

LCD-LVDS

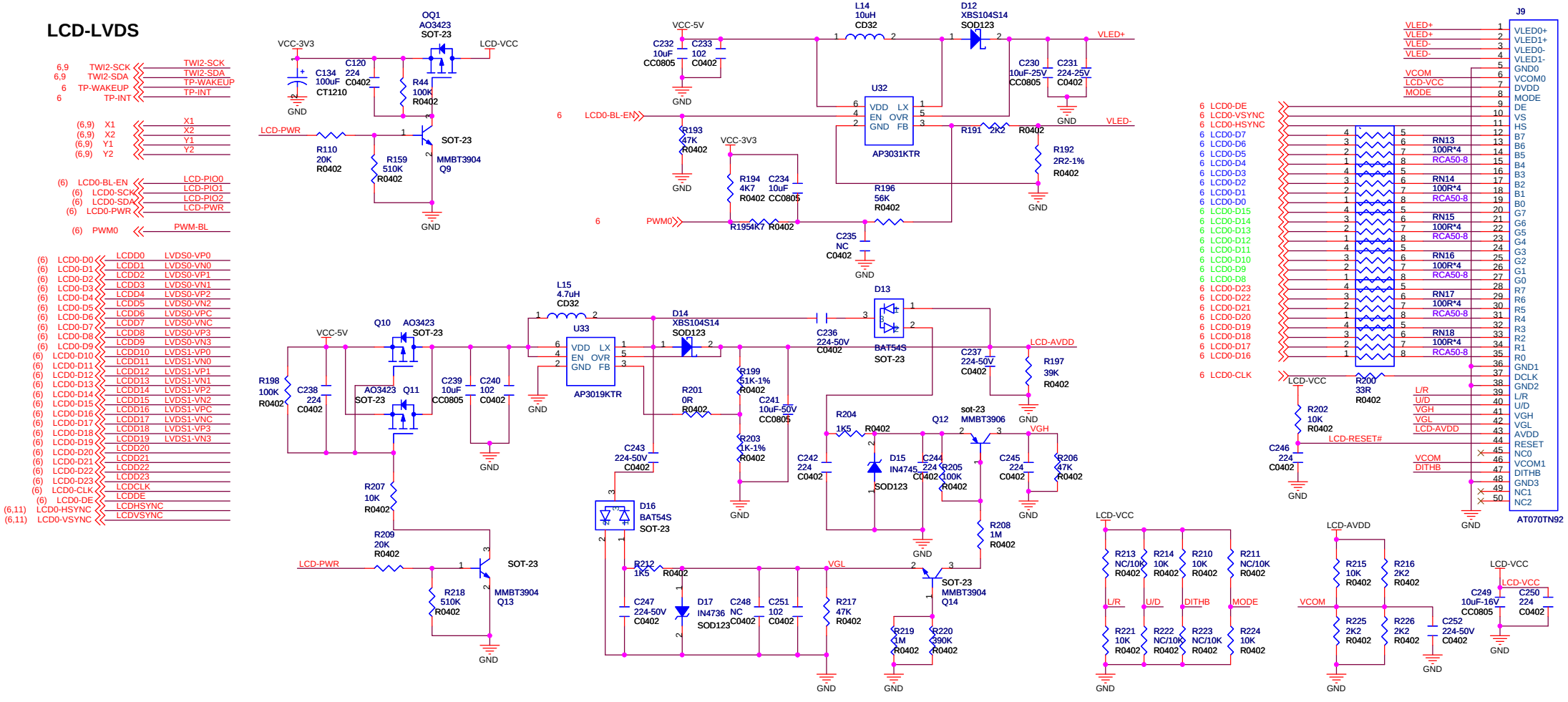

HDMI

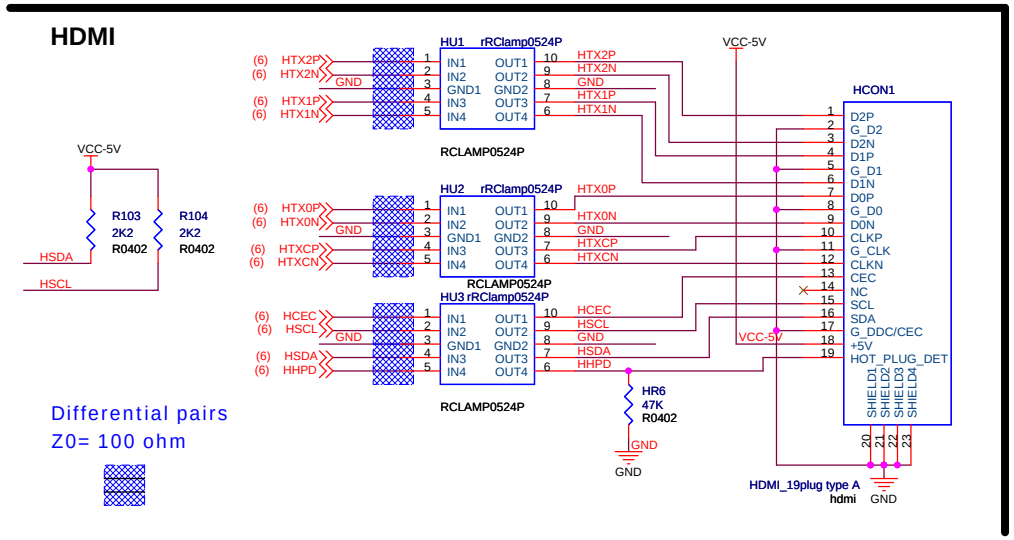

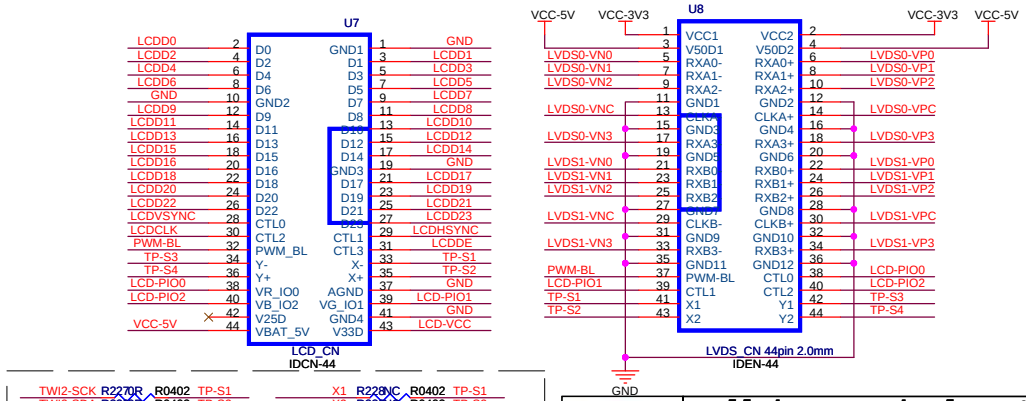

AllWinner Technology Co.,Ltd	
Design Name	A10-EVB-V1-2
Size A3	Page Name LCD-LVDS-HDMI
Rev	1.0
Date:	Tuesday, July 26, 2011
Sheet	10 of 17

TVIN

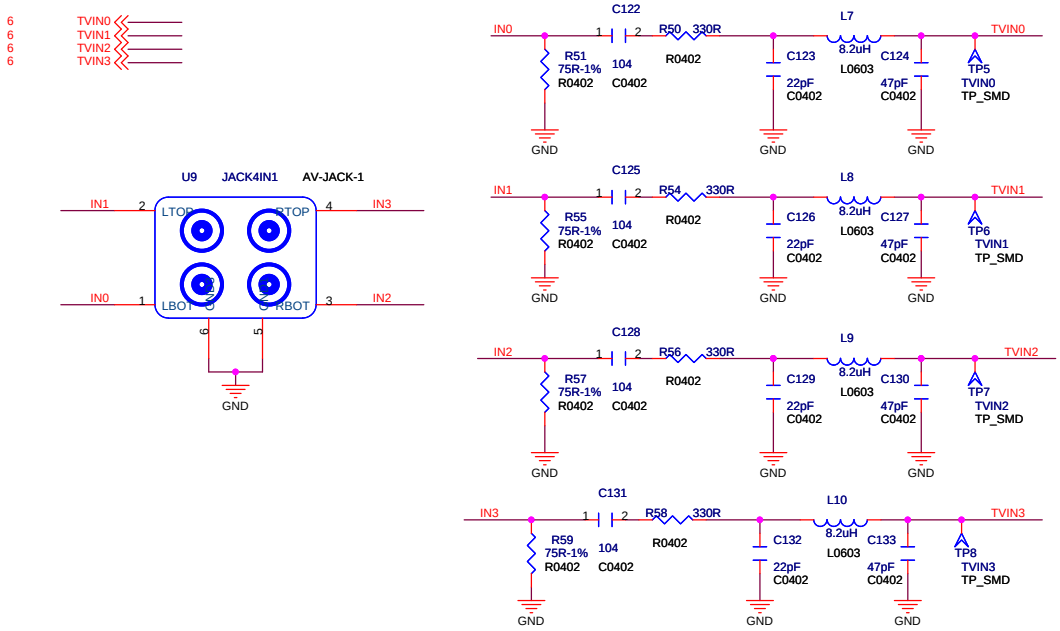

VGA OUT

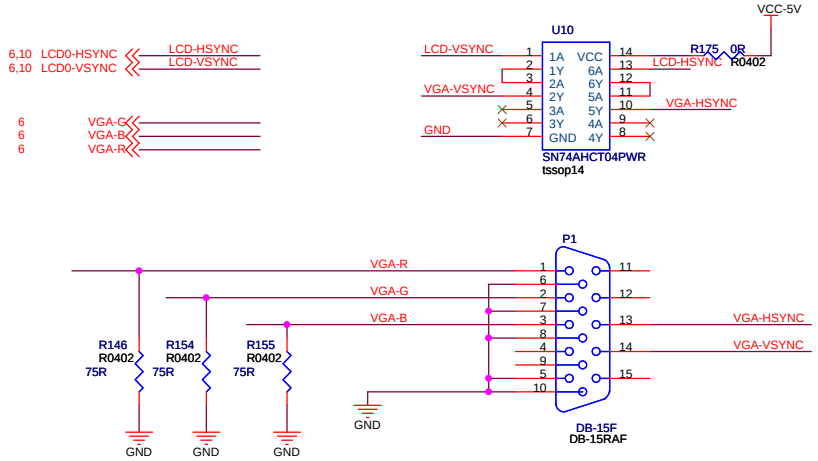

CVBS OUT

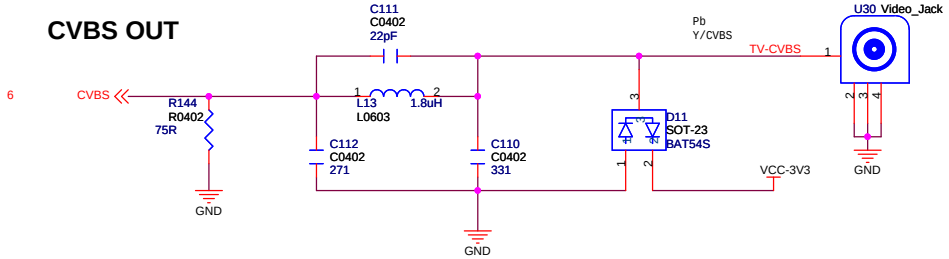

CSI0

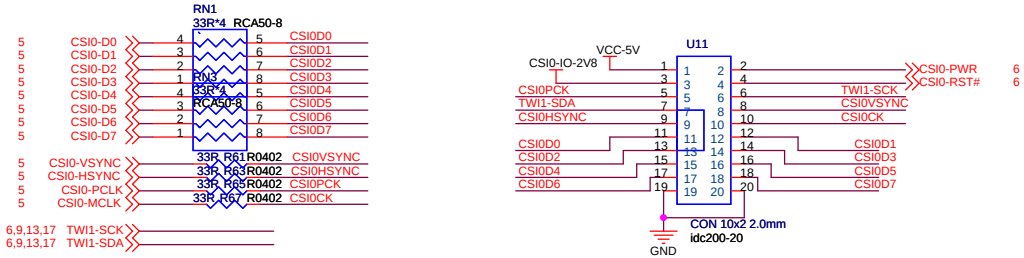

CSI1

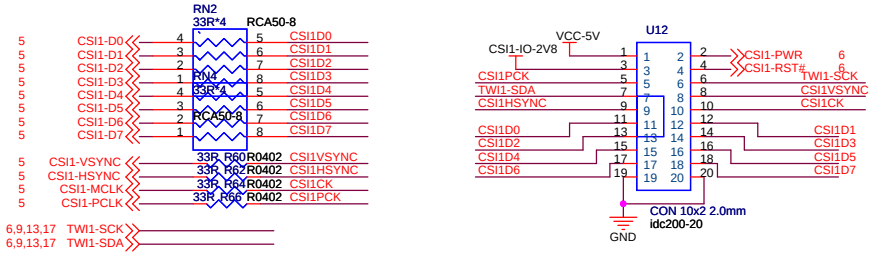

AllWinner Technology Co.,Ltd			
Design Name	A10-EVB-V1-2		
Size A3	Page Name CSI-TVIN-VGA-CVBS		Rev 1.0
Date: Tuesday, July 26, 2011	Sheet 11 of 17		

USB

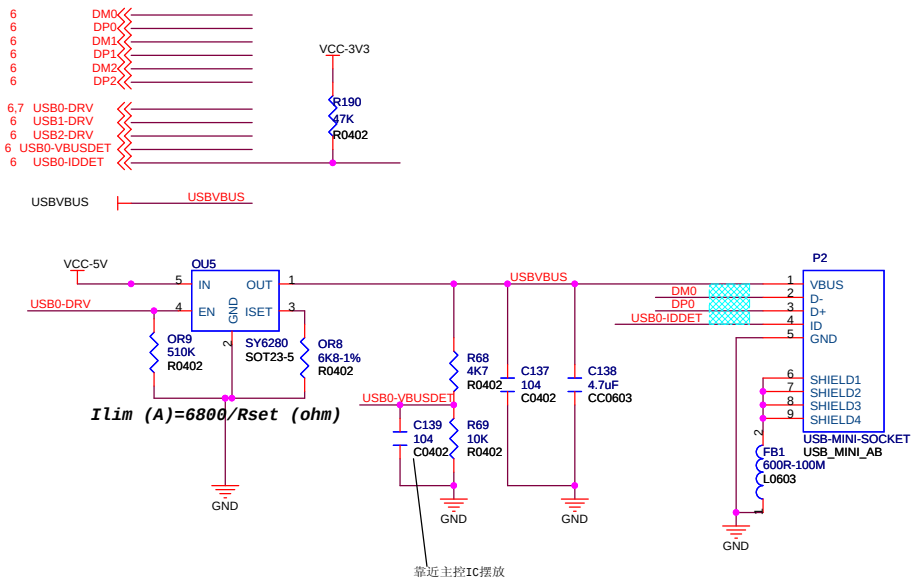

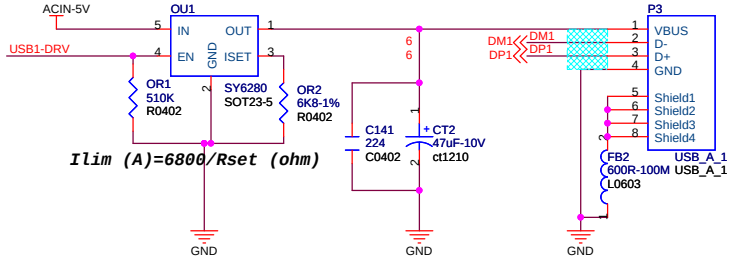

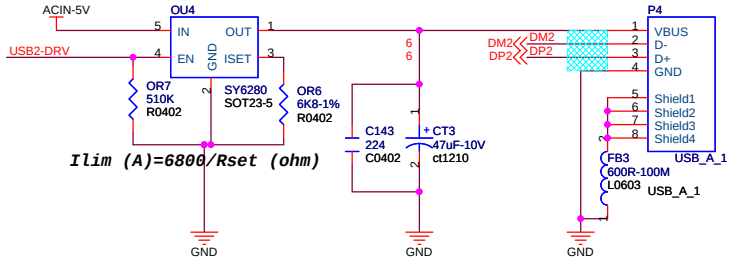

Differential pairs
Z0= 90 ohm

CARD0

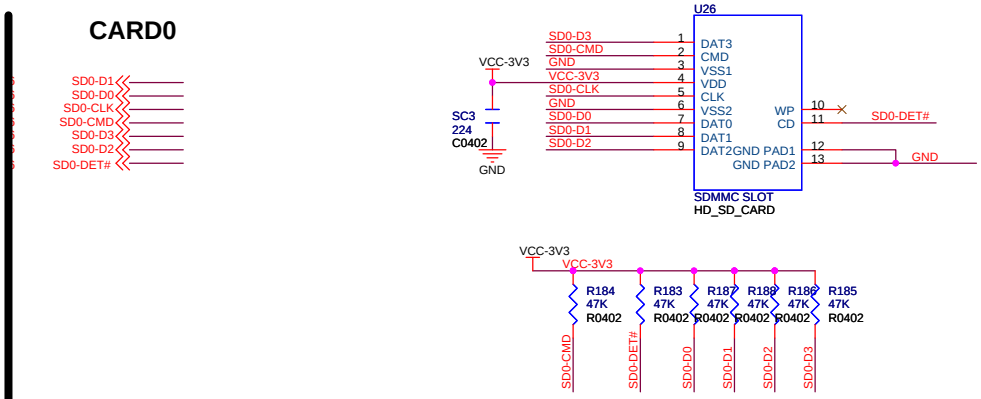

CARD1

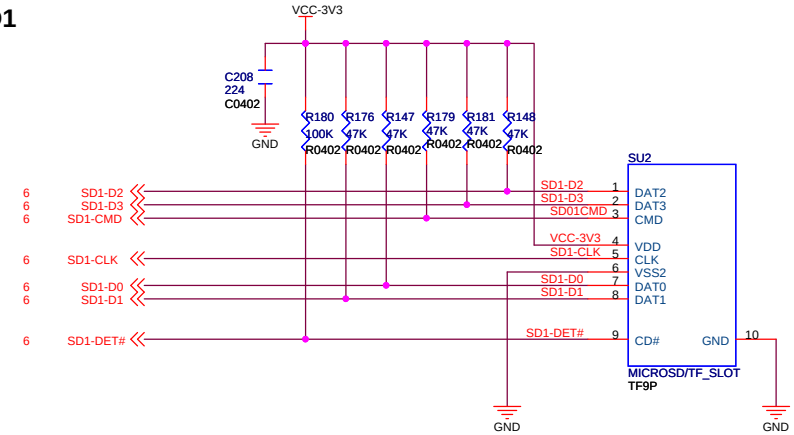

SDIO WIFI/CARD3

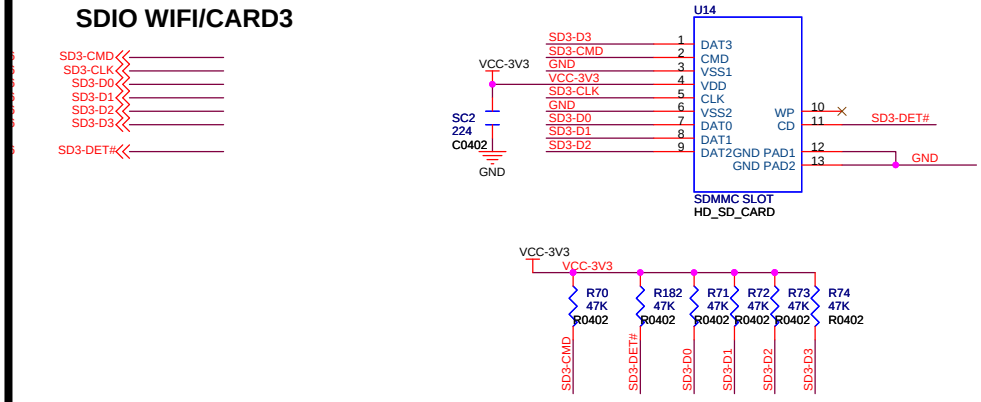

AllWinner Technology Co.,Ltd			
Design Name	A10-EVB-V1-2		
Size A3	Page Name USB-CARD0/2-SDIOWIFI		Rev 1.0
Date: Tuesday, July 26, 2011	Sheet 12 of 17		

EMAC

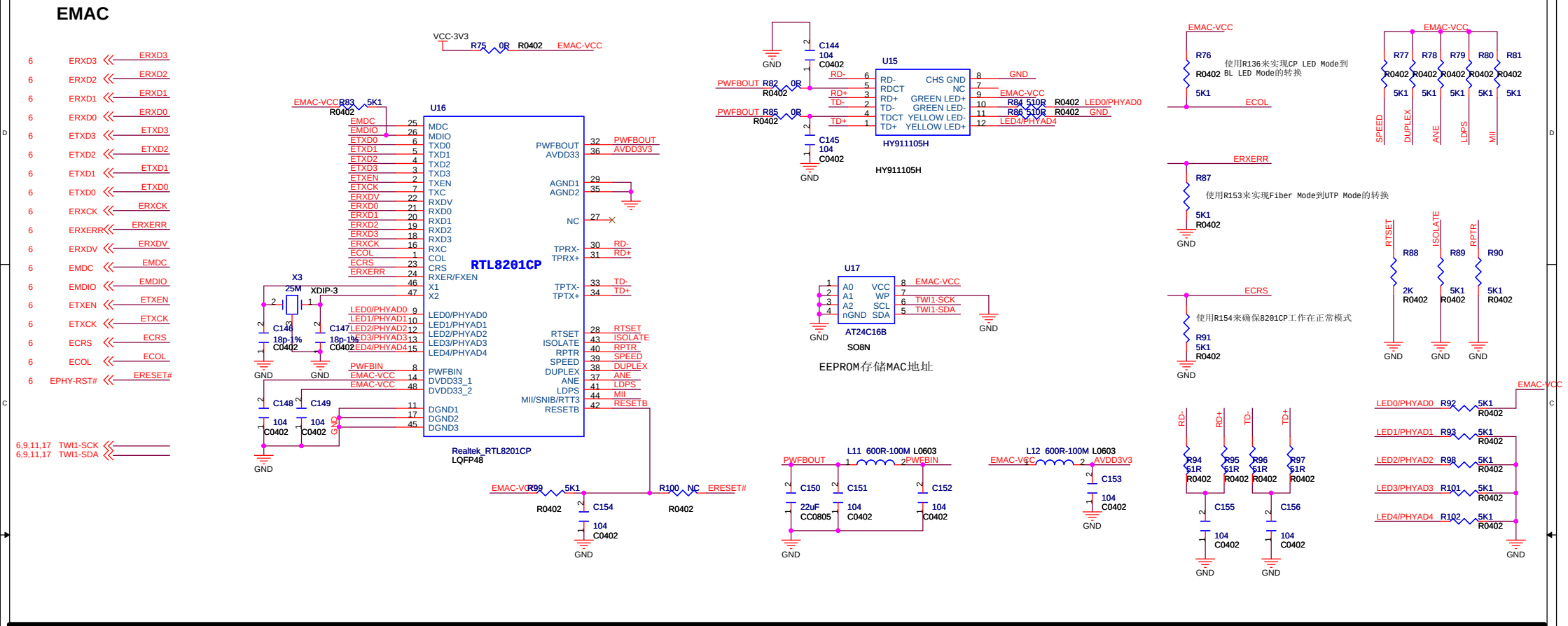

UART0

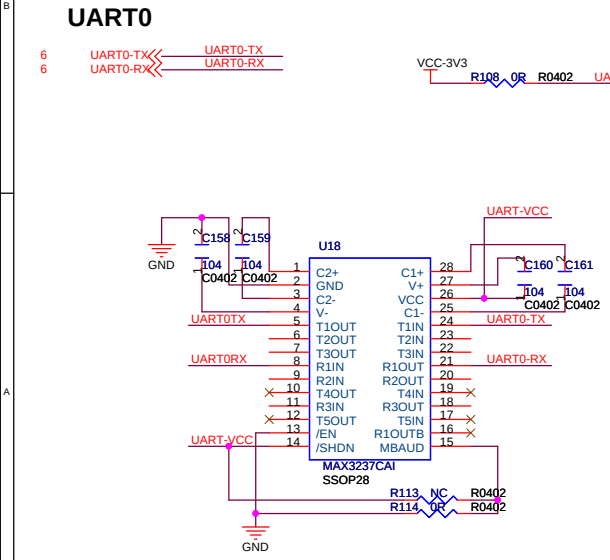

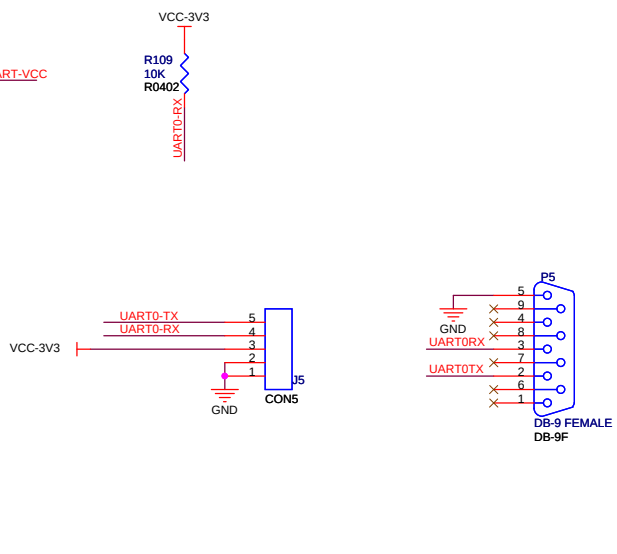

JTAG

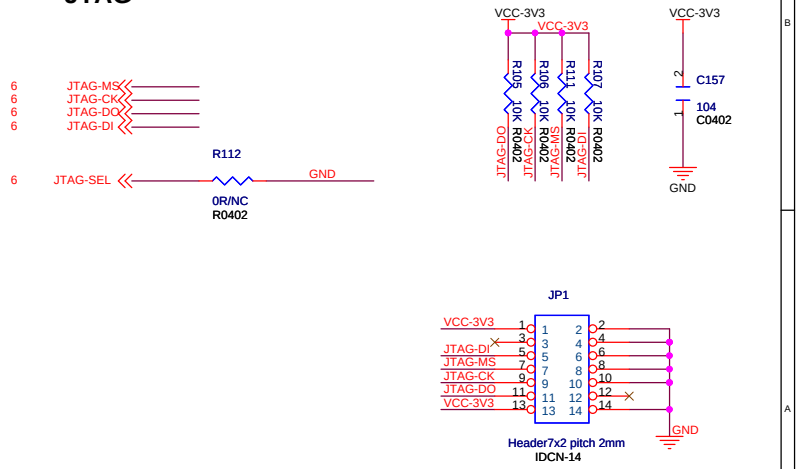

AllWinner Technology Co.,Ltd	
Design Name	A10-EVB-V1-2
Size A3 / Page Name	UART0-JTAG-EMAC / Rev 1.0
Date: Tuesday, July 26, 2011	Sheet 13 of 17

DDR3

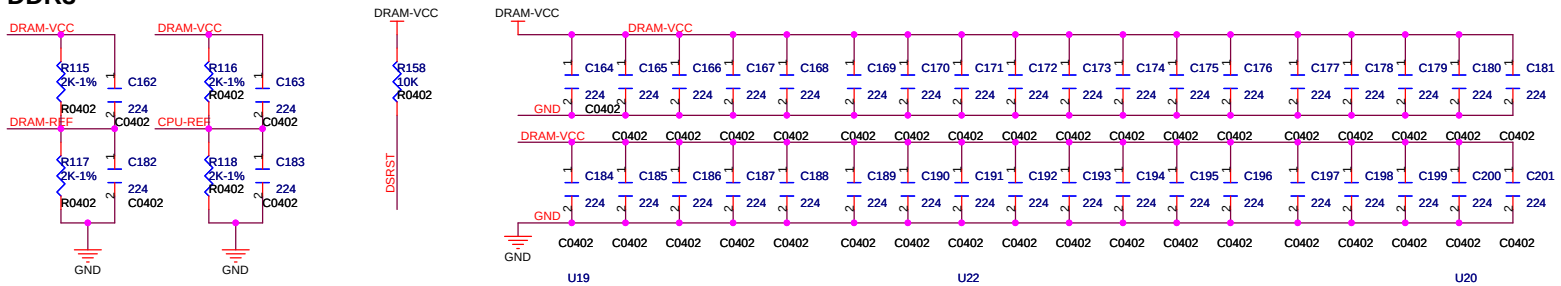

DQ0-7、DQM0、DQS0 Length matching 100mil
DQ8-15、DQM1、DQS1 Length matching 100mil
DQ16-23、DQM2、DQS2 Length matching 100mil
DQ24-31、DQM3、DQS3 Length matching 100mil
DA、CONTROL、CK Length matching 300mil
DQSn、DQSn# Differential pairs Z0= 100 ohm, Length matching 10mil
CK、CK# Differential pairs Z0= 100 ohm, Length matching 10mil

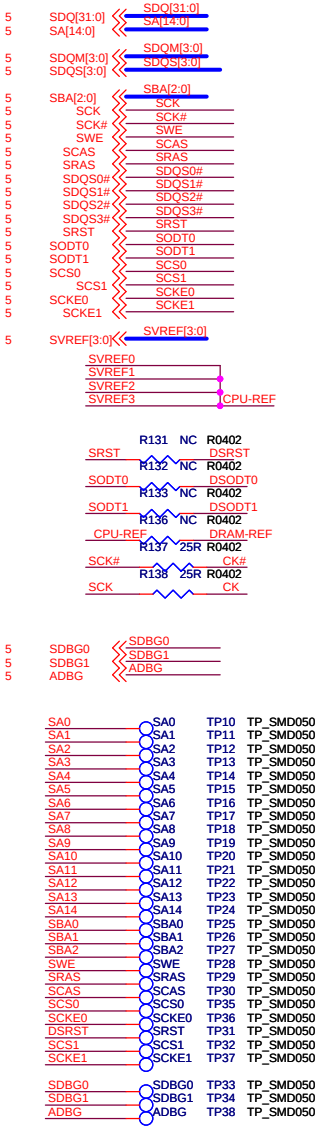

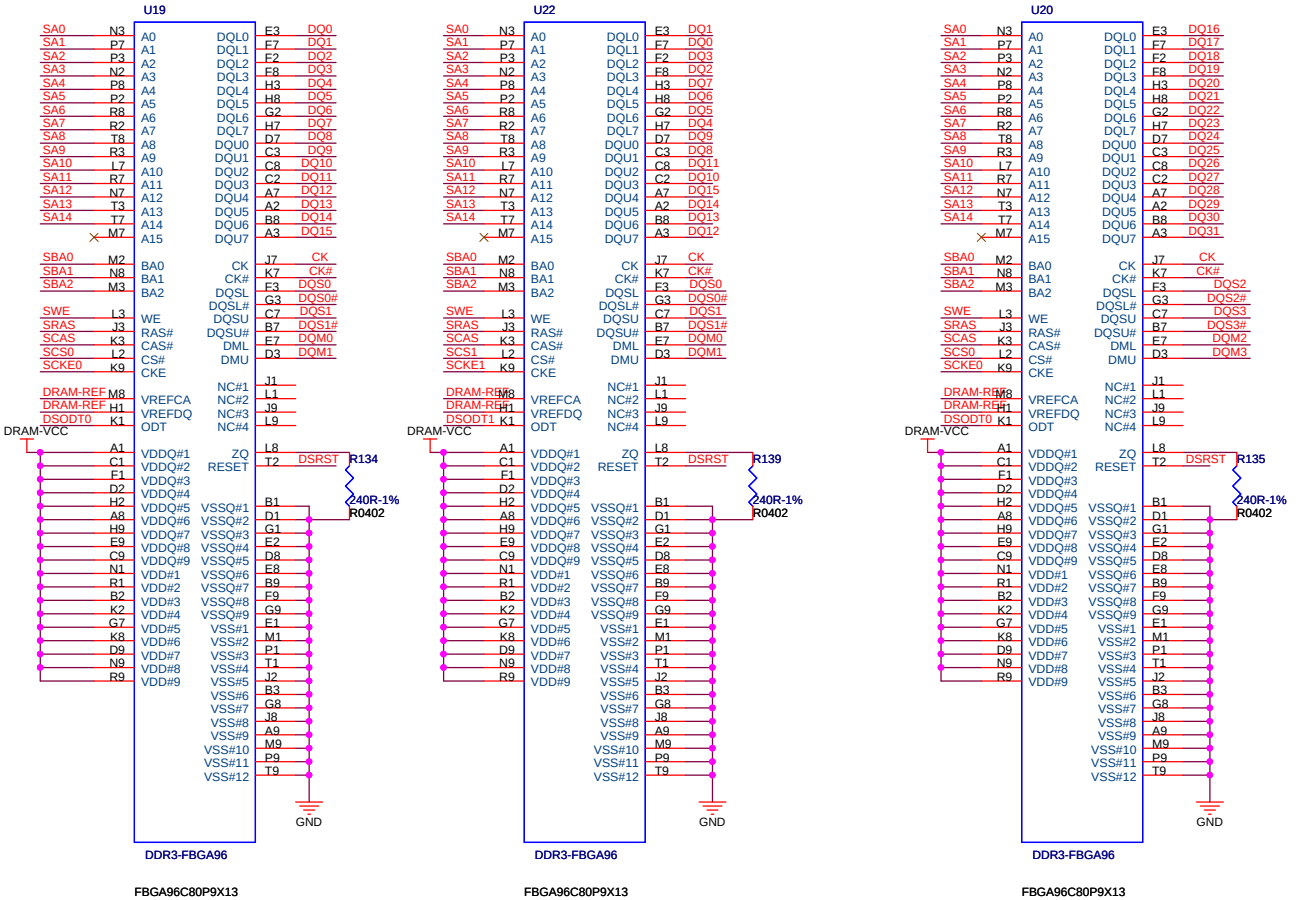

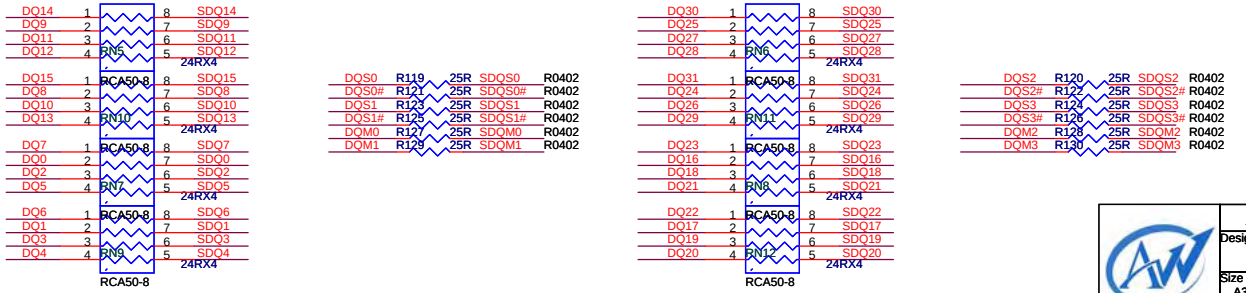

AllWinner Technology Co.,Ltd			
Design Name: A10-EVB-V1-2			
Size: A3	Page Name: DRAM3		Rev: 1.0
Date: Tuesday, July 26, 2011	Sheet 14 of 17		

NAND Flash

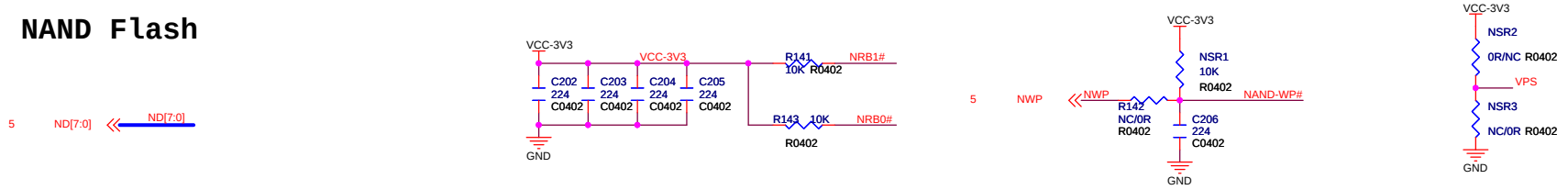

(1) 接1片单片选Nand 时，NSR5、NSR4断开
(2) 接1片双片选Nand 时，连接NSR5，断开NSR4
(3) 接1片四片选Nand 时，连接NSR4，断开NSR5
(4) 接2片单片选或接2片双片选Nand时，连接NSR4，断开NSR5
(5) 接Intel、Toshiba、Samsung 2xnm TSOP Nand时， VPS上拉；接其它Nand 下拉。

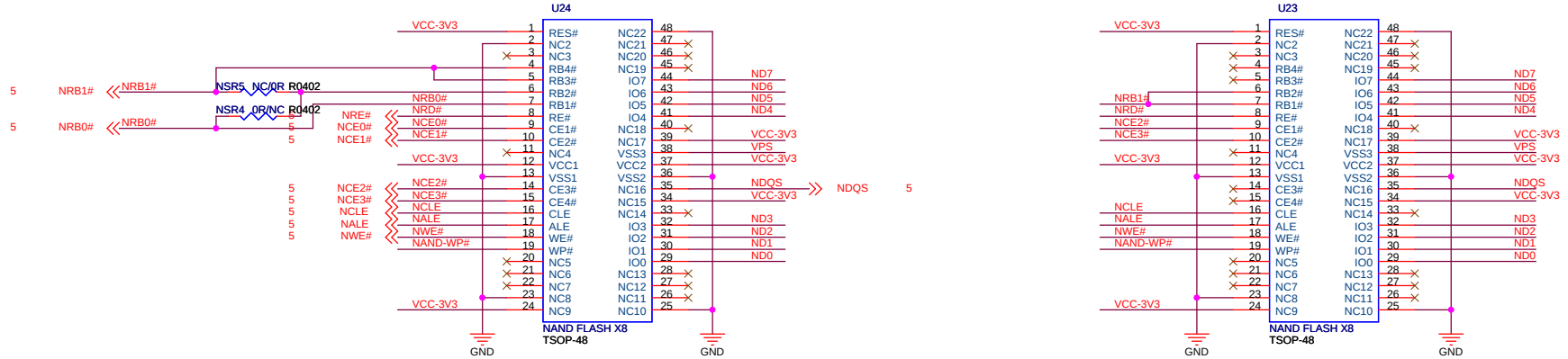

SATA

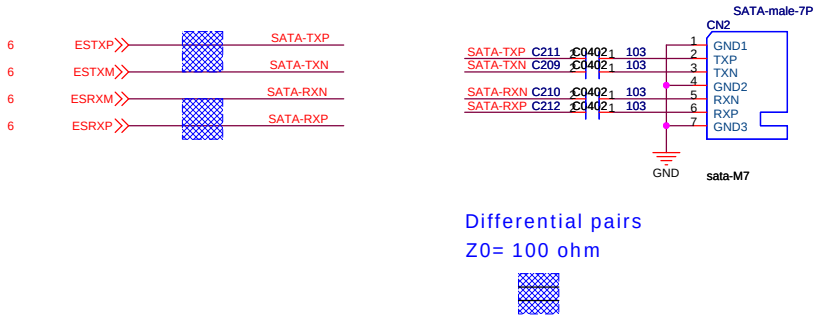

Differential pairs
Z0= 100 ohm

AllWinner Technology Co.,Ltd			
Design Name A10-EVB-V1-2			
Size A3	Page Name NAND-SATA		Rev 1.0
Date: Tuesday, July 26, 2011	Sheet 15 of 17		

Head Phone & Speaker

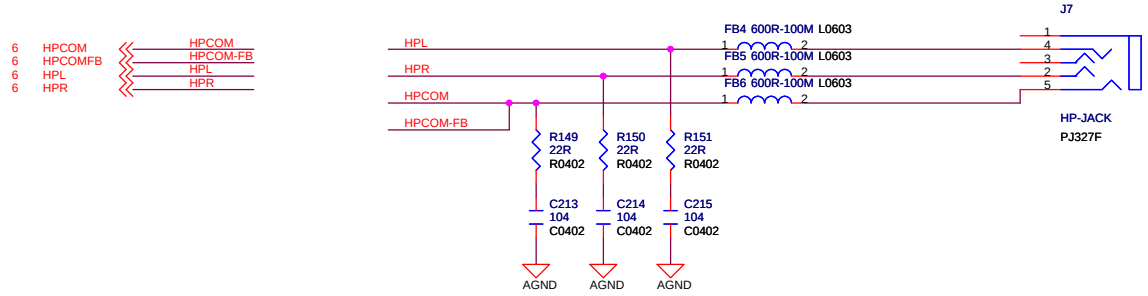

Microphone

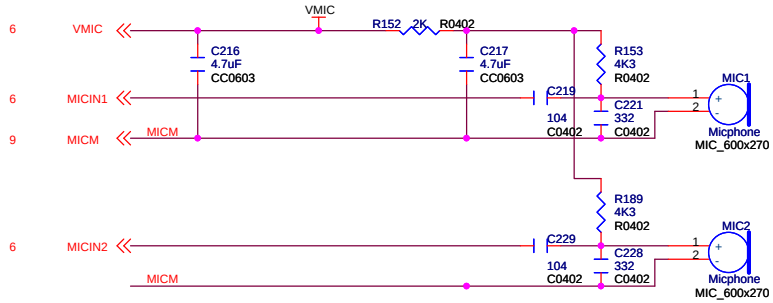

Line In

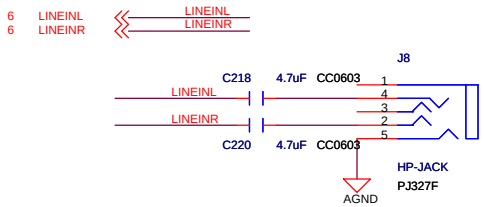

FM IN

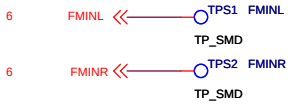

MIC OUT

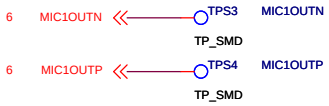

AllWinner Technology Co.,Ltd			
Design Name A10-EVB-V1-2			
Size A3	Page Name HP-LINEIN-MIC		Rev 1.0
Date: Tuesday, July 26, 2011	Sheet 16 of 17		

KEY

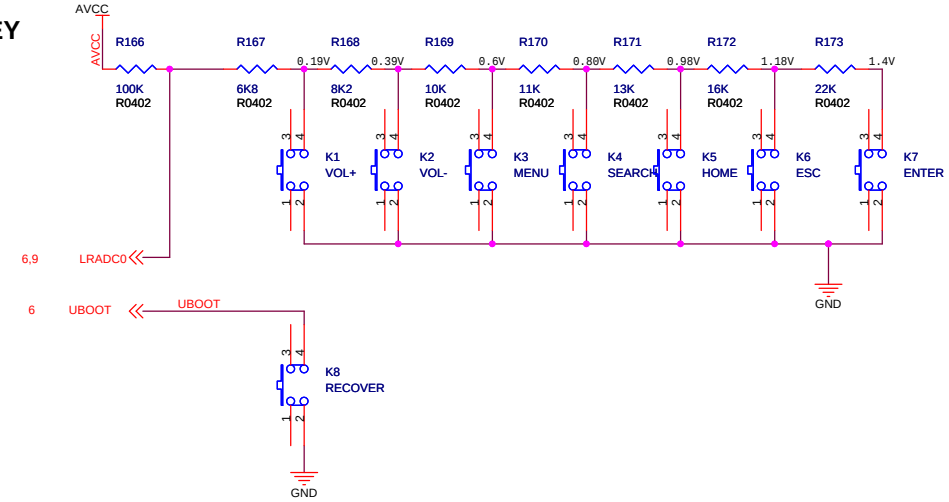

IR MODULE

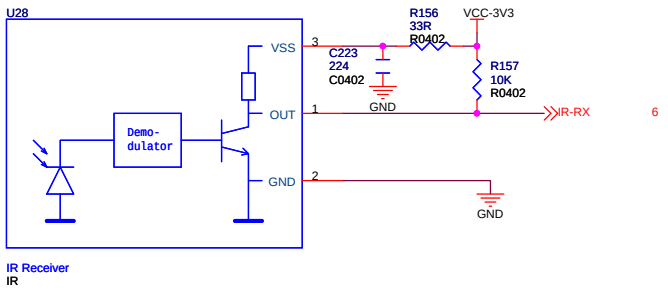

Extend Socket

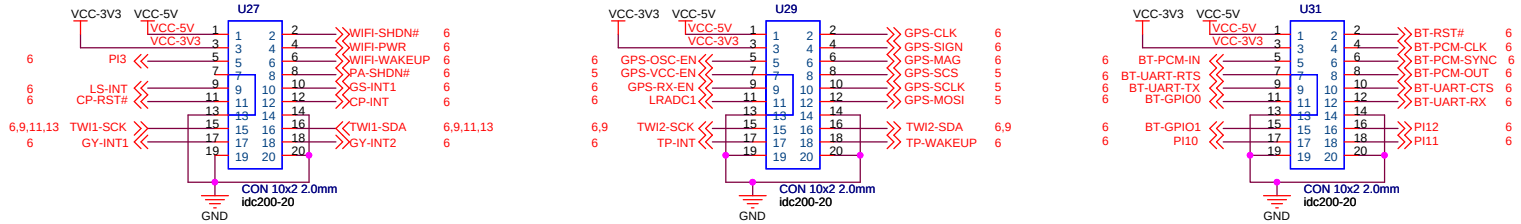

Gsensor

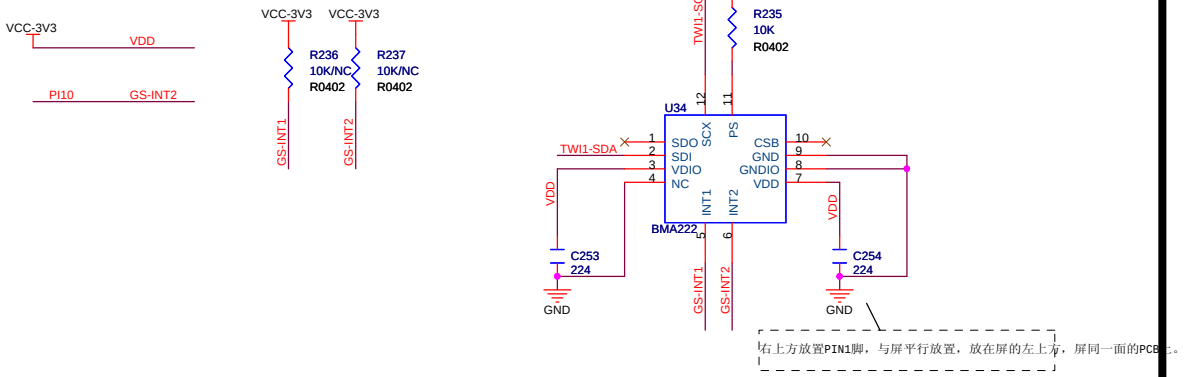

CTP Connector

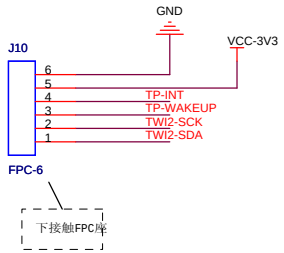

AllWinner Technology Co.,Ltd		
Design Name	A10-EVB-V1-2	
Size A3	Page Name KEY-IR-PIO-GS-CTP	Rev 1.0
Date: Tuesday, July 26, 2011	Sheet 17 of 17	