Notes: Unless Otherwise Stated

Scheme Spec:

FLASH: MLC, 3.3V
DRAM: DDR2/3 1.8V /1.5V
Key: NEXT,PREV,Vol+, Vol-,UP,DOWN, ENTER,UBOOT
Power: DCIN, 5V, 2A; BAT, 3.7V, 3600mAH
USB0: OTG
USB1: HOST
USB2: HOST
WIFI: SDIO WIFI
Card: TFcard*2
Other: GPS,FM, Headphone, MIC, G-Sensor,camera

Power Supply:

电源名称	输出电压	最大供电能力	预计谁在用
AXP209 DCDC2	1.25V	1600mA	CPU
AXP209 DCDC3	1.2V	1200mA	CORE
AXP209 LDO1	1.3V	30mA	RTC
AXP209 LDO2	3V	200mA	AVCC
AXP209 LDO3	2.8V	400mA	CSI0-IO
AXP209 LDO4	3.3V	200mA	CSI1-IO
SY8008B DCDC	1.8V	1000mA	CSI-CORE
SY8008B DCDC	1.5V/1.8V	1000mA	DRAM
SY8008B DCDC	3.3V	1000mA	VCC/LCD/NAND//WIFI
SY7208	5V	2000mA	HDMI/USB
AP1231B28ZRM	2.8V	300mA	CSI0-AF-VCC
AP1231B12ZRM	1.2V	300mA	WIFI
RT9193-33PB	3.3V	300mA	GPS

Schematics Index:

P01: COVER
P02: BLOCK
P03: PIO ASSIGNMENT
P04: POWER TREE
P05: CPU1
P06: CPU2
P07: POWER1
P08: POWER2
P09: BESIDE CPU
P10: HDMI-CSI
P11: HP-FM-KEY-MIC-IR-TVOUT
P12: USB-CARD
P13: LCD
P14: DRAM3
P15: NAND
P16: WIFI-GSENSOR
P17: GPS

Rev	Description	Date	Drawn	Checked	Approved
PAD_MAINCHIP_STD_V1.15	更改了电源电路	2011-07-12	Leo		
PAD_MAINCHIP_STD_V1.15	更改了电源滤波电容（PMU）	2011-07-18	Leo		
PAD_MAINCHIP_STD_V1.16	增加了陀螺仪和马达的IO	2011-07-25	Leo		

BLOCK

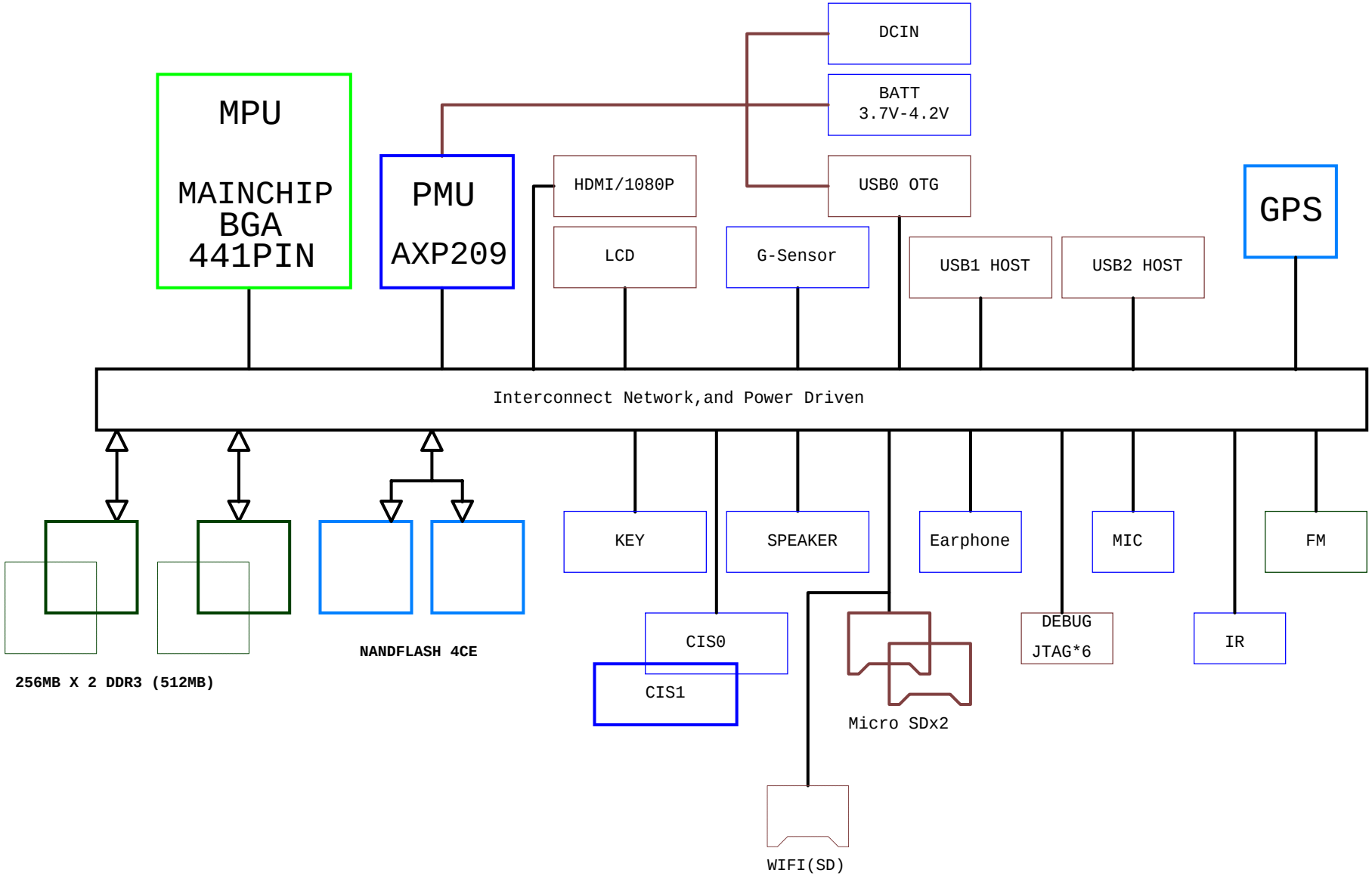

MAINCHIP_PAD_DDR3		
Title: BLOCK		
Size: A3	Document Number: <V1.0>	Rev
Date: Wednesday, March 07, 2012	Sheet 2 of 16	

PIO ASSIGNMENT

Pin Group	Pin Name	Define	Function
PA(18)	PA0	ERXD3	EMAC
	PA1	ERXD2	
	PA2	ERXD1	
	PA3	ERXD0	
	PA4	ETXD3	
	PA5	ETXD2	
	PA6	ETXD1	
	PA7	ETXD0	
	PA8	ERXCK	
	PA9	ERXERR	
	PA10	ERXDV	
	PA11	EMDC	
	PA12	EMDIO	
	PA13	ETXEN	
	PA14	ETXCK	
	PA15	ECRS	
	PA16	ECOL	
	PA17	GPIO_OUT	E-RST
PB(24)	PB0	TWI0_SCK	PMU
	PB1	TWI0_SDA	
	PB2	PWM0	PWM
	PB3	GPIO_OUT	CP-RST
	PB4	IR0_RX	IR
	PB5	GPIO_OUT	BT-RST
	PB6	I2S_BCLK	BT-PCM -CLK
	PB7	I2S_LRCK	BT-PCM -SYNC
	PB8	I2S_DO0	BT-PCM -OUT
	PB9	GPIO_OUT	USB0-DRV
	PB10	GPIO_OUT	LCD0-SCK
	PB11	GPIO_OUT	LCD0-SDA
	PB12	I2S_DI	BT-PCM-IN
	PB13	GPIO_OUT	TP-WAKEUP
	PB14	JTAG_MS0	MT-C
	PB15	JTAG_CK0	GY-INT
	PB16	JTAG_DO0	JTAG
	PB17	JTAG_DI0	
	PB18	TWI1_SCK	TWI1
	PB19	TWI1_SDA	
	PB20	TWI2_SCK	TWI2
	PB21	TWI2_SDA	
	PB22	UART0_TX	UART (DBUG)
	PB23	UART0_RX	

Pin Group	Pin Name	Define	Function
PC(25)	PC0	NWE#	NAND
	PC1	NALE	
	PC2	NCLE	
	PC3	NCE1	
	PC4	NCE0	
	PC5	NRE#	
	PC6	NRB0	
	PC7	NRB1	
	PC8	NDQ0	
	PC9	NDQ1	
	PC10	NDQ2	
	PC11	NDQ3	
	PC12	NDQ4	
	PC13	NDQ5	
	PC14	NDQ6	
	PC15	NDQ7	
	PC16	NWP	
	PC17	NCE2	
	PC18	NCE3	
	PC19	SPI2_CS	GPS-SCS
	PC20	SPI2_SCLK	GPS-SCLK
	PC21	SPI2_MOSI	GPS-MOSI
	PC22	GPIO_OUT	GPS-VCC-EN
	PC23	NC	
	PC24	NDQS	
PD(28)	PD0	LCD0_D0	LCD
	PD1	LCD0_D1	
	PD2	LCD0_D2	
	PD3	LCD0_D3	
	PD4	LCD0_D4	
	PD5	LCD0_D5	
	PD6	LCD0_D6	
	PD7	LCD0_D7	
	PD8	LCD0_D8	
	PD9	LCD0_D9	
	PD10	LCD0_D10	
	PD11	LCD0_D11	
	PD12	LCD0_D12	
	PD13	LCD0_D13	
	PD14	LCD0_D14	
	PD15	LCD0_D15	
	PD16	LCD0_D16	
	PD17	LCD0_D17	

Pin Group	Pin Name	Define	Function
PD(28)	PD18	LCD0_D18	LCD
	PD19	LCD0_D19	
	PD20	LCD0_D20	
	PD21	LCD0_D21	
	PD22	LCD0_D22	
	PD23	LCD0_D23	
	PD24	LCD0_CLK	
	PD25	LCD0_DE	
	PD26	LCD0_HSYNC	
	PD27	LCD0_VSYNC	
PE(12)	PE0	CSI0_PCLK	CSI0
	PE1	CSI0_MCLK	
	PE2	CSI0_HSYNC	
	PE3	CSI0_VSYNC	
	PE4	CSI0_D0	
	PE5	CSI0_D1	
	PE6	CSI0_D2	
	PE7	CSI0_D3	
	PE8	CSI0_D4	
	PE9	CSI0_D5	
	PE10	CSI0_D6	
	PE11	CSI0_D7	
PF(6)	PF0	SDC0_D1	SDC0
	PF1	SDC0_D0	
	PF2	SDC0_CLK	
	PF3	SDC0_CMD	
	PF4	SDC0_D3	
	PF5	SDC0_D2	
PG(12)	PG0	CSI1_PCLK	CSI1
	PG1	CSI1_MLCK	
	PG2	CSI1_HSYNC	
	PG3	CSI1_VSYNC	
	PG4	CSI1_D0	
	PG5	CSI1_D1	
	PG6	CSI1_D2	
	PG7	CSI1_D3	
	PG8	CSI1_D4	
	PG9	CSI1_D5	
	PG10	CSI1_D6	
	PG11	CSI1_D7	

Pin Group	Pin Name	Define	Function
PH(28)	PH0	EINT0	GS-INT1
	PH1	GPIO_IN	SD0-DET#
	PH2	GPIO_IN	SD1-DET#
	PH3	GPIO_OUT	USB2-DRV
	PH4	GPIO_IN	USB0-IDDET
	PH5	GPIO_IN	USB0-VBUSDET
	PH6	GPIO_OUT	USB1-DRV
	PH7	GPIO_OUT	LCD-BL-EN
	PH8	GPIO_OUT	LCD-PWR
	PH9	GPIO_OUT	WIFI-SHDN#
	PH10	GPIO_OUT	WIFI-HOST WAKEUP
	PH11	GPIO_OUT	WIFI-VDD-EN
	PH12	GPIO_OUT	WIFI-VCC-EN
	PH13	GPIO_OUT	CSI0-RESET#
	PH14	GPIO_OUT	CSI1-RESET#
	PH15	GPIO_OUT	PA-SHDN#
	PH16	GPIO_OUT	CSI0-1V8-EN
	PH17	GPIO_OUT	CSI1-1V8-EN
	PH18	EINT18	CSI0-STBY-EN
	PH19	EINT19	CSI1-STBY-EN
	PH20	EINT20	LS-INT
	PH21	EINT21	TP-INT
	PH22	SDC1_CMD	SDC1
	PH23	SDC1_CLK	
	PH24	SDC1_D0	
	PH25	SDC1_D1	
	PH26	SDC1_D2	
	PH27	SDC1_D3	
PI(22)	PI0	GPS_CLK	GPS
	PI1	GPS_SIGN	
	PI2	GPS_MAG	
	PI3	PWM1	
	PI4	SDC3_CMD	WIFI
	PI5	SDC3_CLK	
	PI6	SDC3_D0	
	PI7	SDC3_D1	
	PI8	SDC3_D2	
	PI9	SDC3_D3	
	PI10	SPI0_CS0	GS-INT2
	PI11	SPI0_CLK	CSI0-AF-EN
	PI12	SPI0_MOSI	TV-EN
	PI13	SPI0_MISO	CP-INT
	PI14	GPIO_OUT	GPS-OSC-EN

Pin Group	Pin Name	Define	Function
PI(22)	PI15	GPIO_OUT	GPS-RX-EN
	PI16	UART2_RTS	BT-UART-RTS
	PI17	UART2_CTS	BT-UART-CTS
	PI18	UART2_TX	BT-UART-TX
	PI19	UART2_RX	BT-UART-RX
	PI20	GPIO_OUT	BT-GPIO0
	PI21	GPIO_OUT	BT-GPIO1

	MAINCHIP_PAD_DDR3
Title	PIO ASSIGNMENT
Size A3	Document Number <V1.0> Rev
Date: Wednesday, March 07, 2012	Sheet 3 of 16

POWER TREE

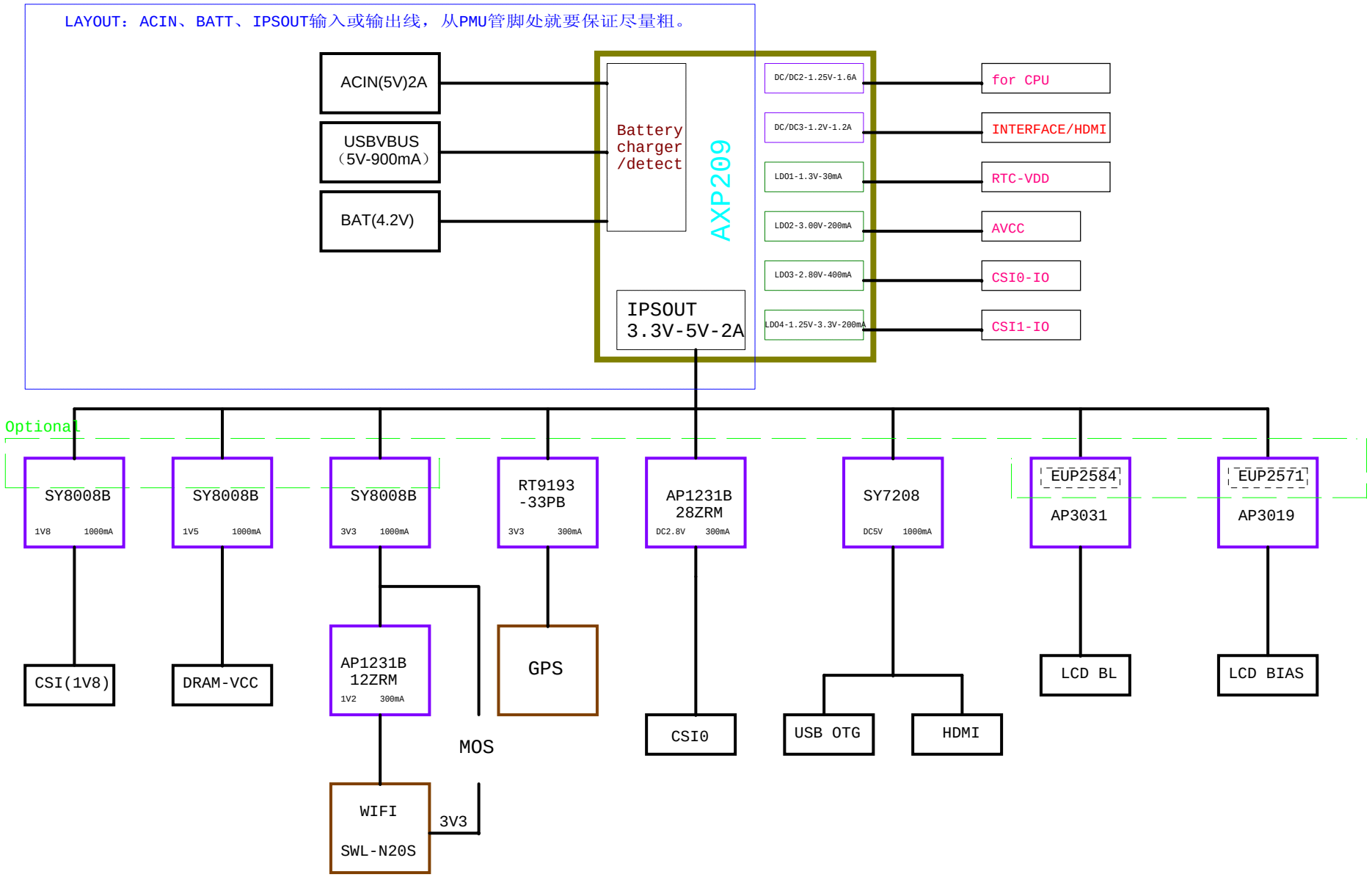

MAINCHIP_PAD_DDR3		
Title: POWER TREE		
Size: A3	Document Number: <V1.0>	Rev
Date: Wednesday, March 07, 2012	Sheet 4 of 16	

CPU1

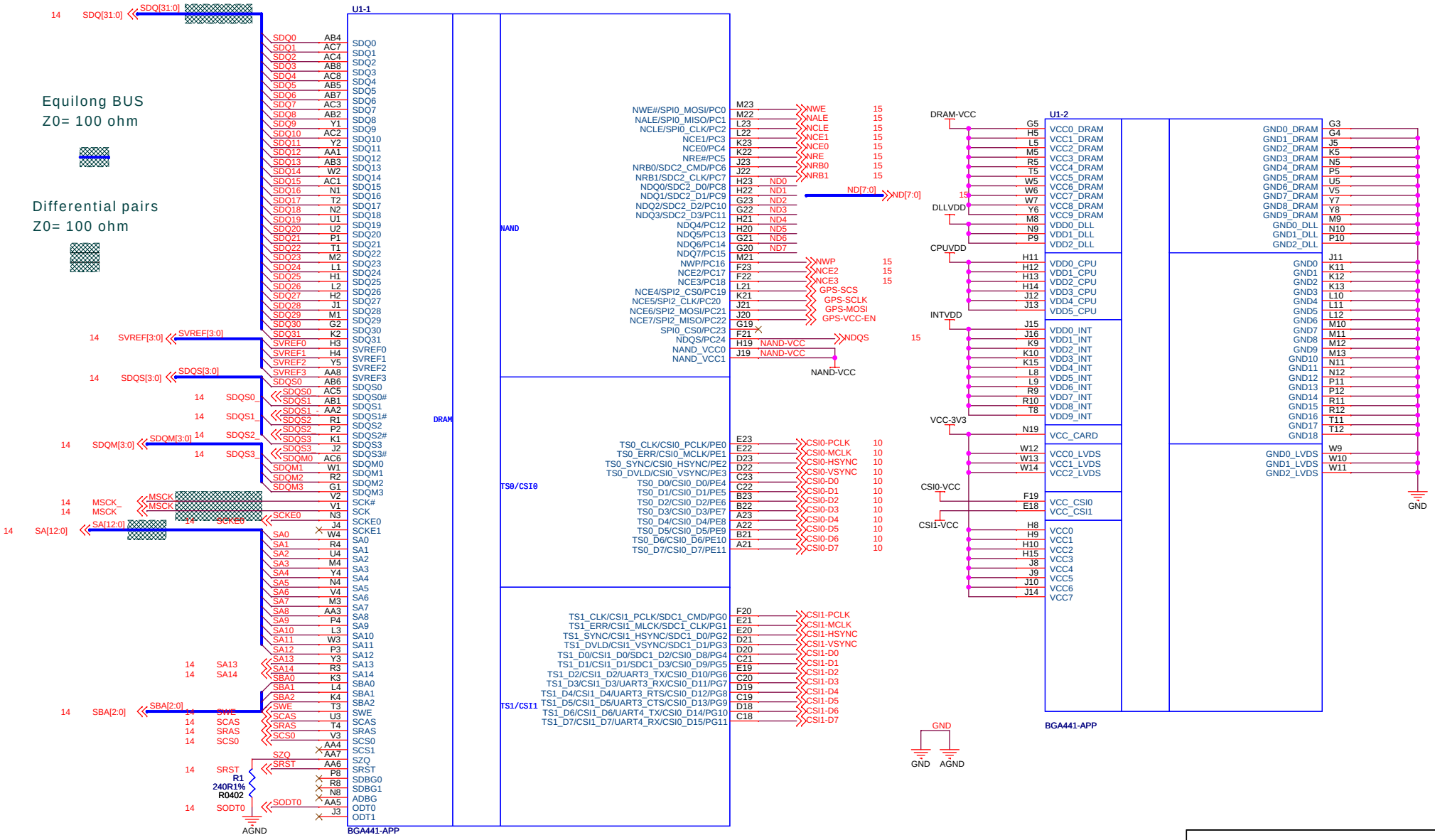

MAINCHIP_PAD_DDR3

Title	CPU1		
Size A3	Document Number <V1.0>		Rev
Date: Wednesday, March 07, 2012	Sheet 5 of 16		

CPU2

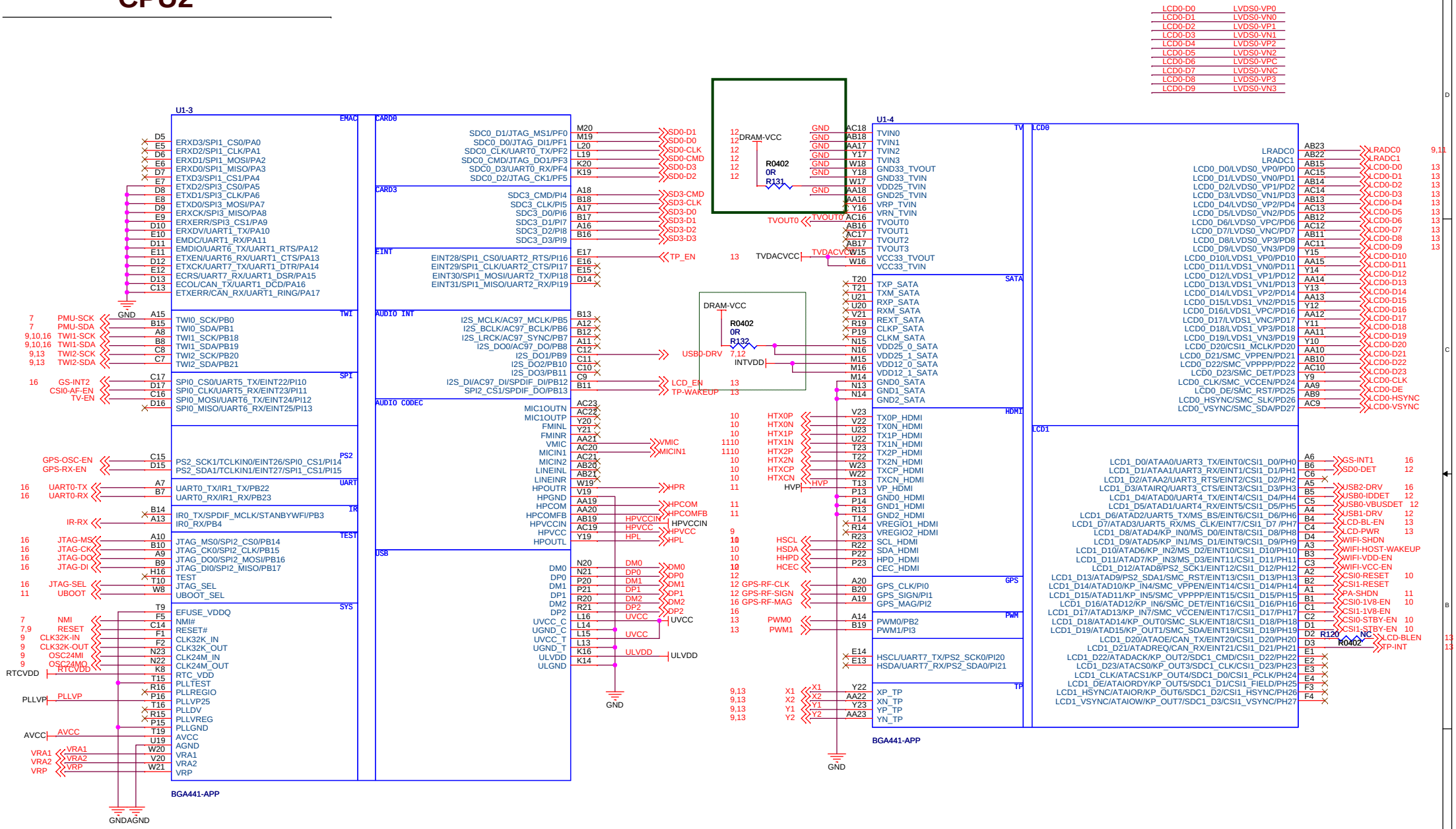

MAINCHIP_PAD_DDR3

Title	CPU2	
Size A3	Document Number <V1.0>	Rev
Date: Wednesday, March 07, 2012	Sheet 6 of 16	

POWER-PMU

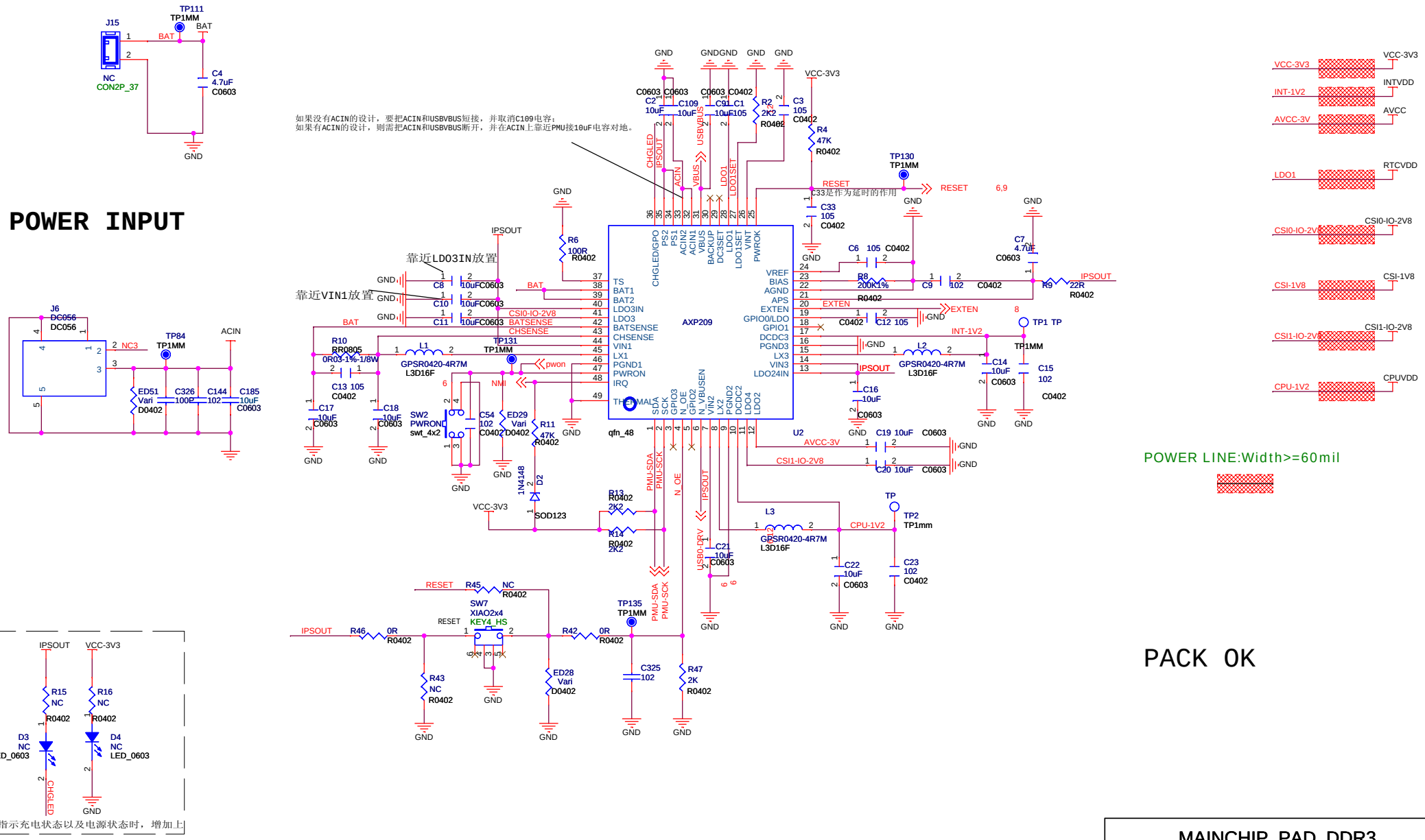

MAINCHIP_PAD_DDR3			
Title POWER-PMU			
Size A3	Document Number <V1.0>		Rev
Date: Wednesday, March 07, 2012	Sheet 7 of 16		

POWER-DC/DC

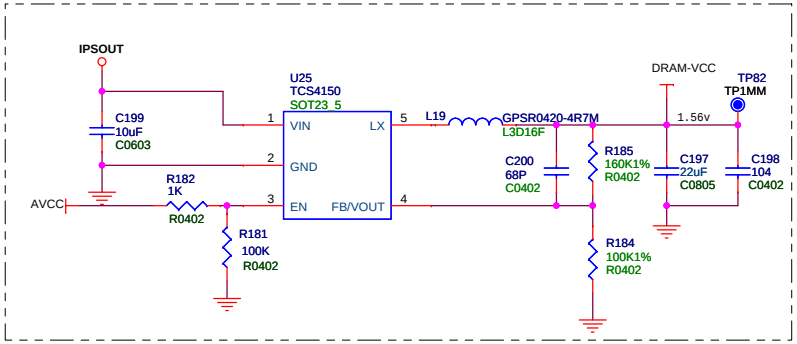

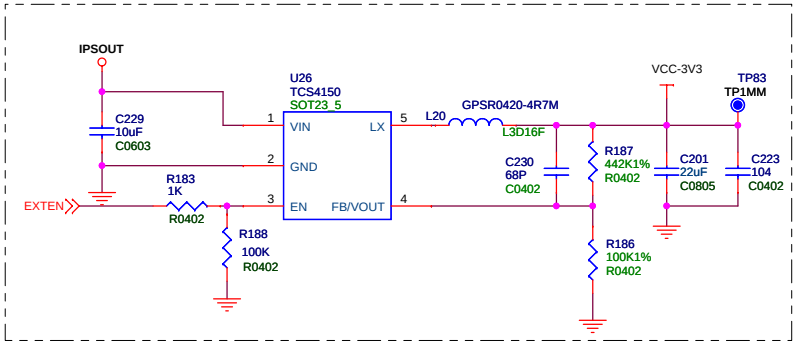

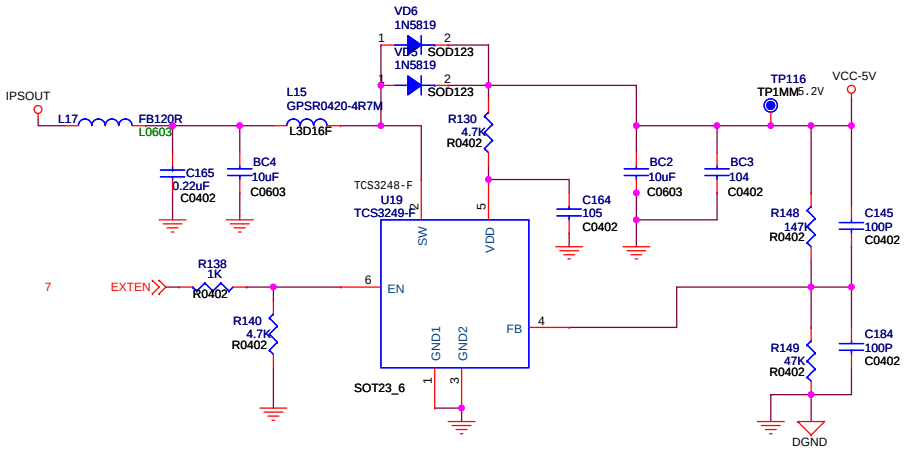

MAINCHIP_PAD_DDR3		
Title POWER-DC/DC		
Size A3	Document Number <V1.0>	Rev
Date: Wednesday, March 07, 2012	Sheet 8 of 16	

BESIDE CPU

DRAM

LAYOUT：按照一个PIN，放一个电容，并且尽量靠近PIN摆放。

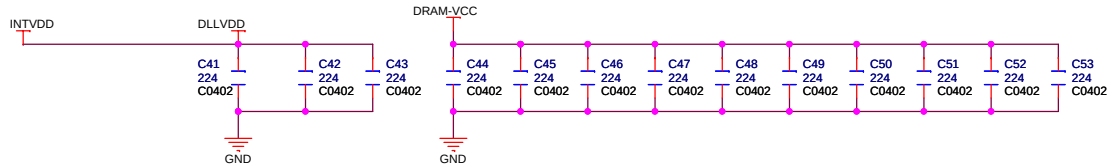

PLL

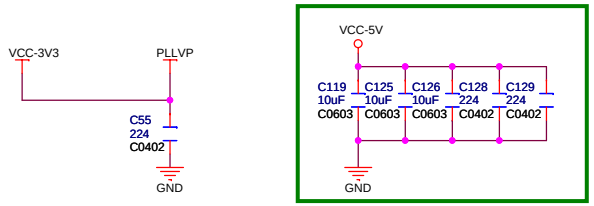

Crystal

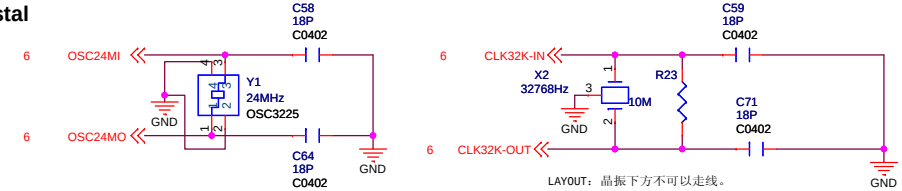

LAYOUT：晶振下方不可以走线。

CORE

LAYOUT：按照一个PIN，放一个电容，并且尽量靠近PIN摆放。

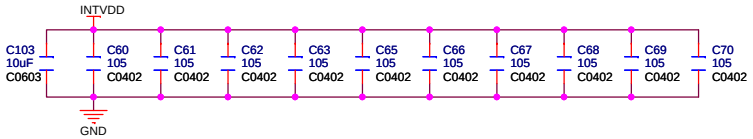

AUDIO&SYS&TP

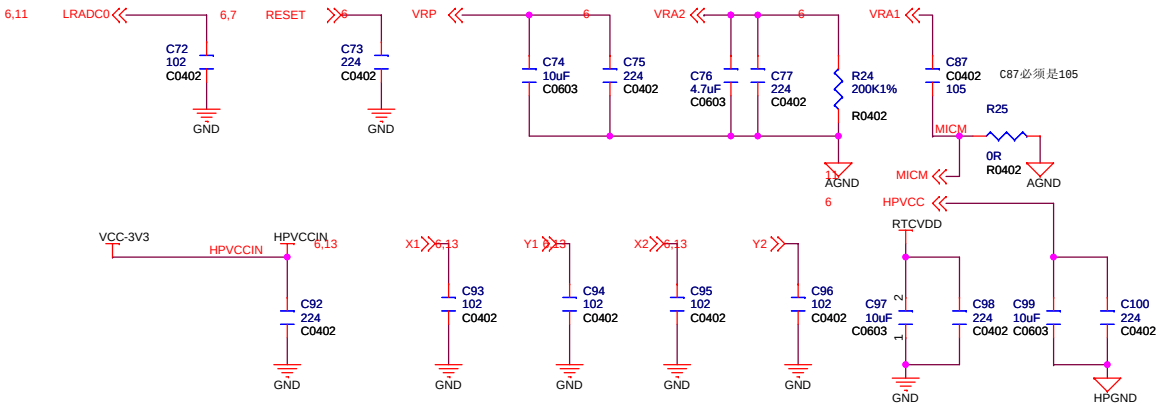

PIO-INTFACE

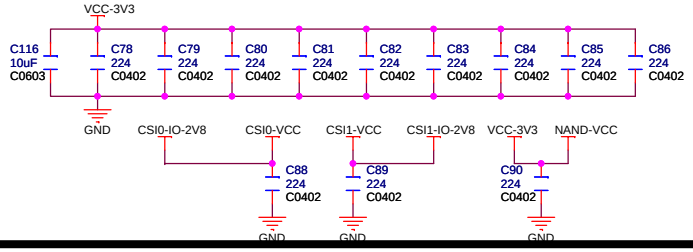

CPU&TV

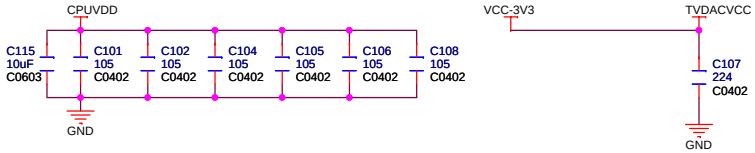

USB

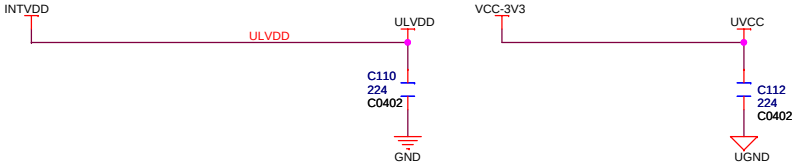

TWI-PULLUP

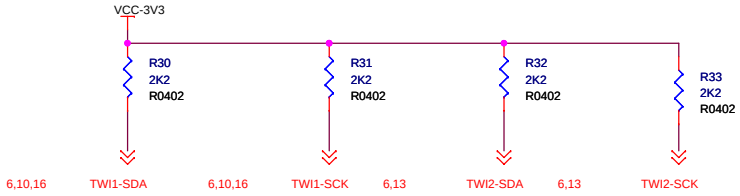

HDMI

Title	MAINCHIP_PAD_DDR3		
	BESIDE CPU		
Size A3	Document Number <V1.0>		Rev
Date: Wednesday, March 07, 2012	Sheet 9 of 16		

HDMI-CSI0

HDMI

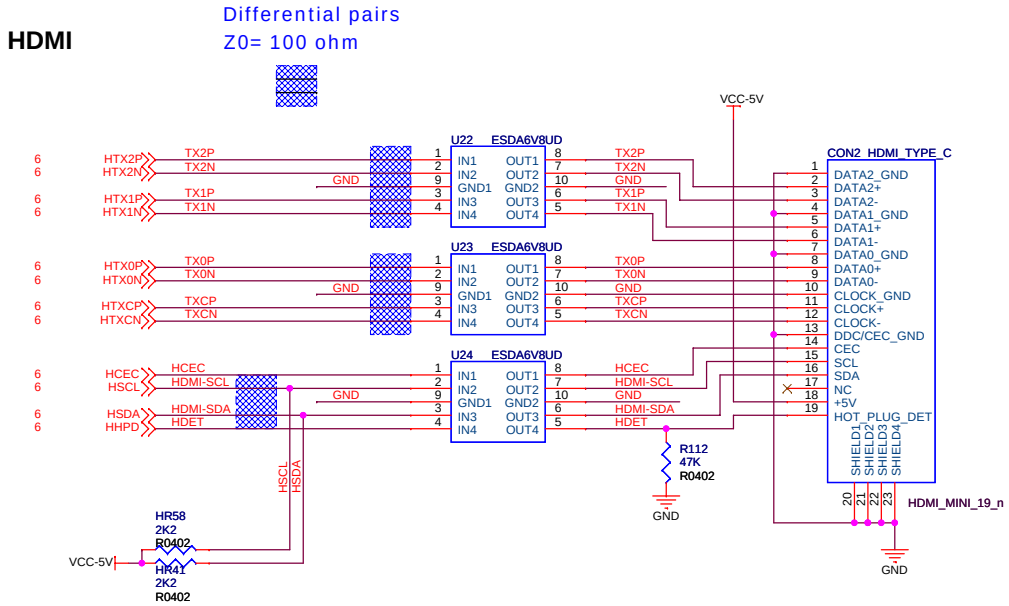

CSI1

前置低分辨率

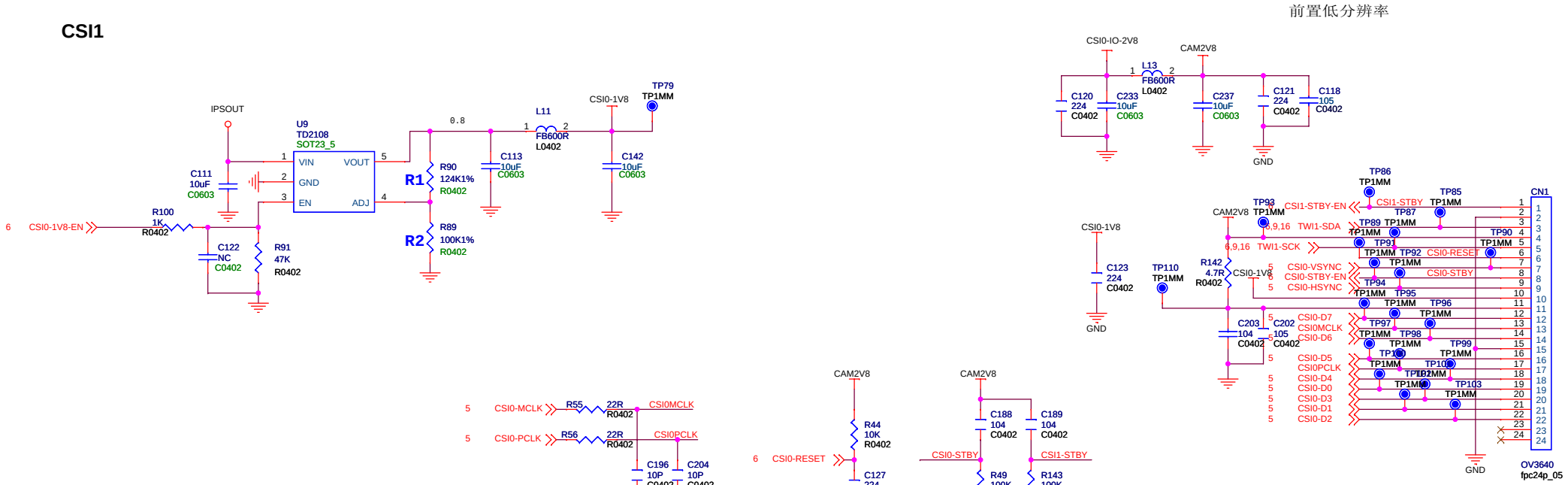

请根据实际摄像头的要求选择上拉方式！

MAINCHIP_PAD_DDR3	
Title	HDMI-CSI
Size A3	Document Number <V1.0> Rev
Date: Wednesday, March 07, 2012	Sheet 10 of 16

HP-KEY-MIC-IR-TVOUT

Head Phone & TVOUT

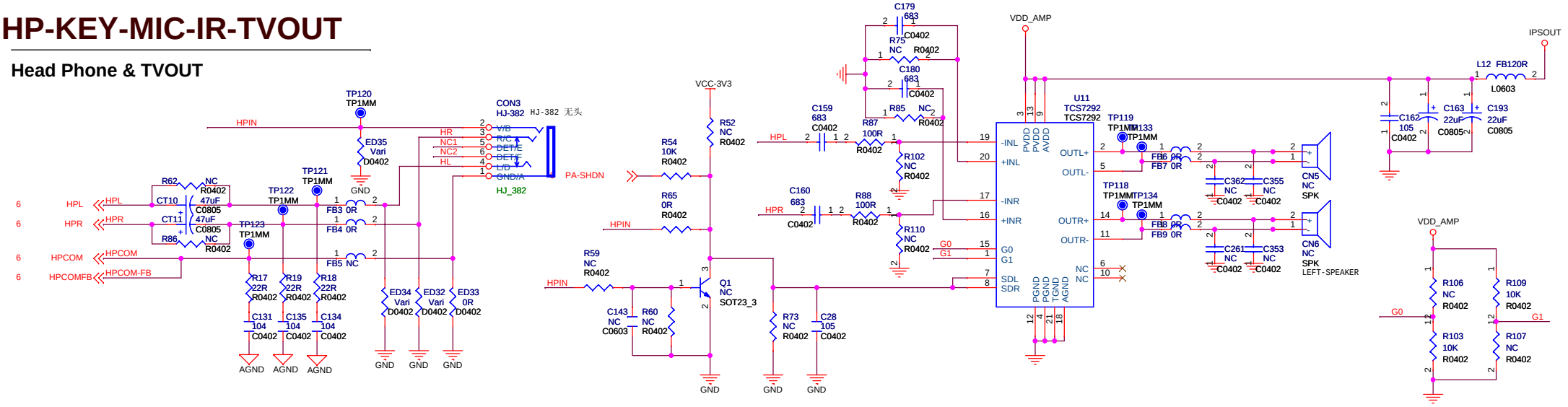

Microphone

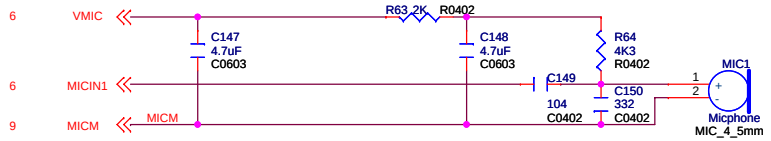

KEY

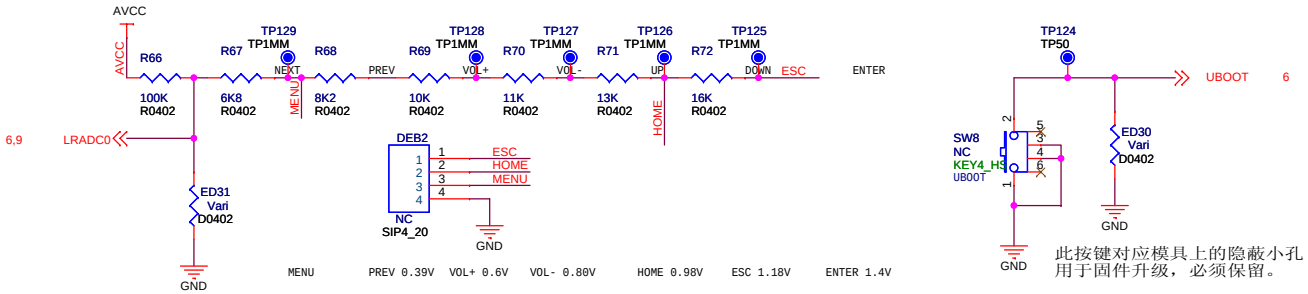

此按键对应模具上的隐蔽小孔用于固件升级，必须保留。

按键可删除，但名称不能修改，电阻不可删除。

MAINCHIP_PAD_DDR3	
Title	HP-KEY-MIC-IR-TVOUT
Size A3	Document Number <V1.0> Rev
Date: Wednesday, March 07, 2012	Sheet 11 of 16

USB-CARD

USB

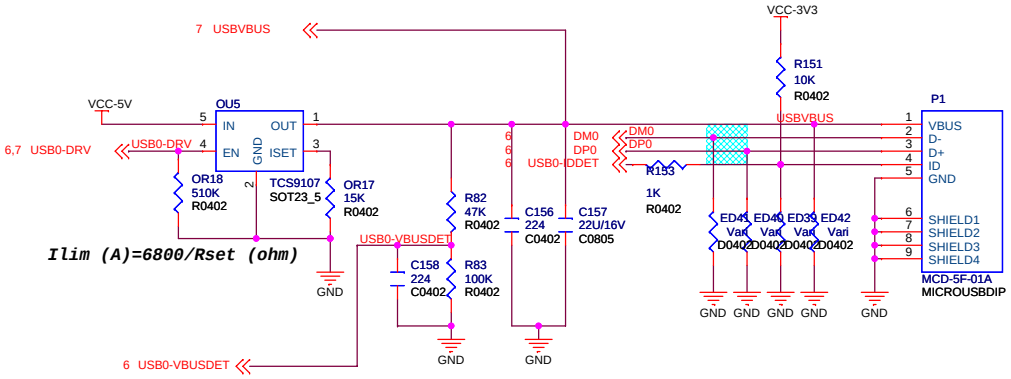

Differential pairs
Z0= 90 ohm

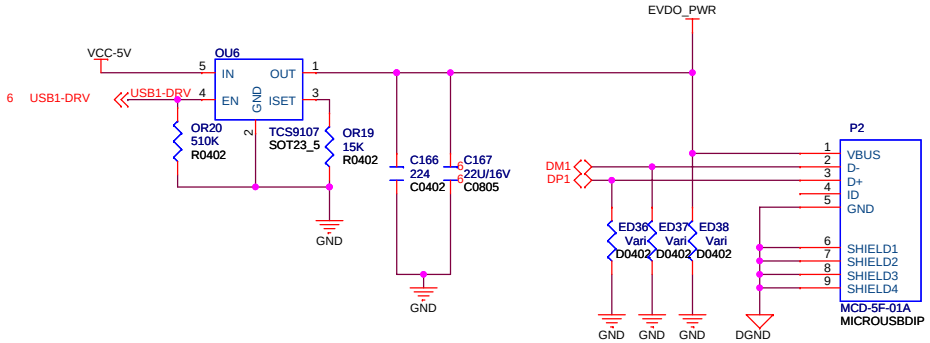

CARD0

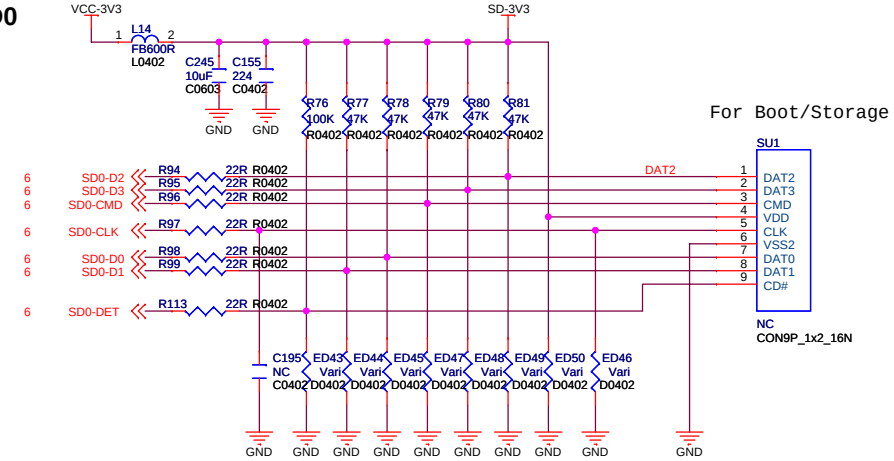

	MAINCHIP_PAD_DDR3
Title	USB-CARD
Size A3	Document Number <V1.0> Rev
Date: Wednesday, March 07, 2012	Sheet 12 of 16

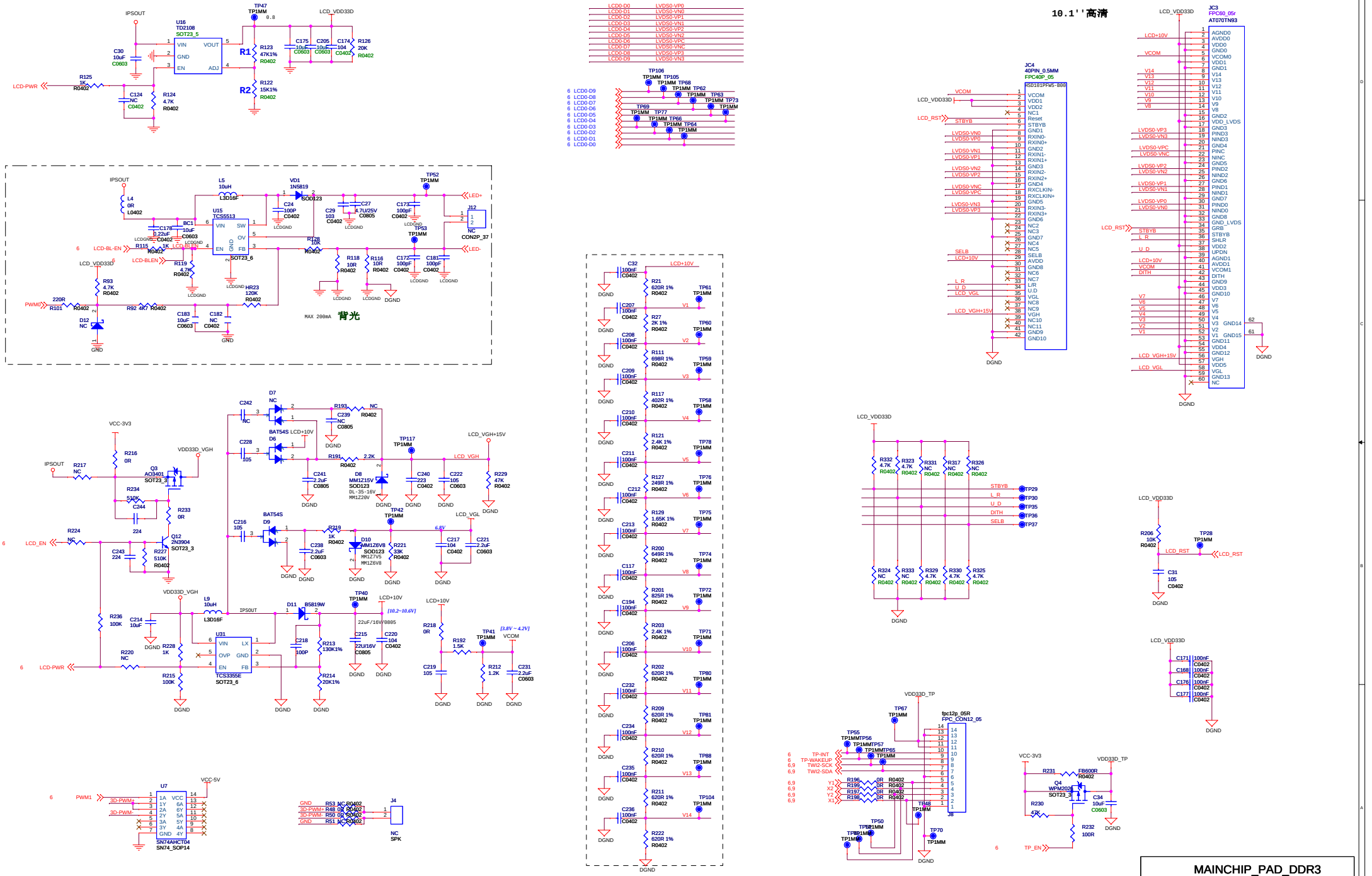
10.1''高清
背光
MAX 200mA
U16 TD2108 SOT23_5
U15 TCS5513 SOT23_6
U31 TCS3355E SOT23_6
U7 SN74AHCT04 SN74_SOP14
JC3 FPC80_05r AT070TN93
JC4 40PIN_0.5MM FPC40P_05
J8 fpc12p_05R FPC_CON12_05
J12 CON2P_37
J4 NC SPK
Q3 AO3401 SOT23_3
Q12 2N3904 SOT23_3
Q4 WPM2024 SOT23_3
D12 NC
D7 NC
D6 BAT54S
D9 BAT54S
D8 MM1Z15V SOD123 DL-35-16V MM1Z20V
D10 MM1Z6V8 SOD123 MM1Z7V5 MM1Z6V8
D11 B5819W
VD1 1N5819 SOD123
L4 0R L0402
L5 10uH L3D16F
L9 10uH L3D16F
R101 220R R0402
R92 4K7 R0402
R93 4.7K R0402
R115 1K R0402
R119 4.7K R0402
R123 47K1% R0402
R122 15K1% R0402
R124 4.7K R0402
R125 1K R0402
R126 20K R0402
R128 10K R0402
R118 10R R0402
R116 10R R0402
R193 NC R0402
R191 2.2K R0402
R219 1K R0402
R213 130K1%
R214 20K1%
R215 100K
R220 NC
R228 1K
R236 100K
R192 1.5K
R212 1.2K
R206 10K R0402
R231 FB600R R0402
R230 47K
R232 100R
R229 47K R0402
R217 NC
R216 0R
R233 0R
R234 510K
R224 NC
R227 510K R0402
R218 0R
R241 2.2uF C0805
R238 2.2uF C0603
R332 4.7K R0402
R323 4.7K R0402
R331 NC R0402
R317 NC R0402
R326 NC R0402
R324 NC R0402
R333 NC R0402
R329 4.7K R0402
R330 4.7K R0402
R325 4.7K R0402
R48 0R R0402
R50 0R R0402
R51 NC R0402
R53 NC R0402
R196 0R R0402
R199 0R R0402
R197 0R R0402
R198 0R R0402
TP47 TP1MM 0.8
TP52 TP1MM
TP53 TP1MM
TP106 TP1MM
TP117 TP1MM
TP42 TP1MM
TP40 TP1MM
TP41 TP1MM
TP67 TP1MM
TP55 TP1MM
TP56 TP1MM
TP57 TP1MM
TP65 TP1MM
TP48 TP1MM
TP50 TP1MM
TP70 TP1MM
TP28 TP1MM
TP29
TP30
TP35
TP36
TP37
TP61 TP1MM
TP60 TP1MM
TP59 TP1MM
TP58 TP1MM
TP78 TP1MM
TP76 TP1MM
TP75 TP1MM
TP74 TP1MM
TP72 TP1MM
TP71 TP1MM
TP80 TP1MM
TP81 TP1MM
TP88 TP1MM
TP104 TP1MM
LCD-PWR
LCD-EN
LCD-BL-EN
LCD-BLEN
PWM0
PWM1
3D-PWM+
3D-PWM-
LED+
LED-
LCD_VDD33D
LCD_VGH+15V
LCD_VGL
LCD_VGH
LCD+10V
VDD33D_VGH
VDD33D_TP
VCC-3V3
VCC-5V
IPSOUT
VCOM
LCD_RST
TP-INT
TP-WAKEUP
TWI2-SCK
TWI2-SDA
TP_EN
DGND
LCDGND
MAINCHIP_PAD_DDR3
Title
Size A2
Document Number <V1.0> LCD
Rev
Date: Wednesday, March 07, 2012
Sheet 13 of 16

DDR3

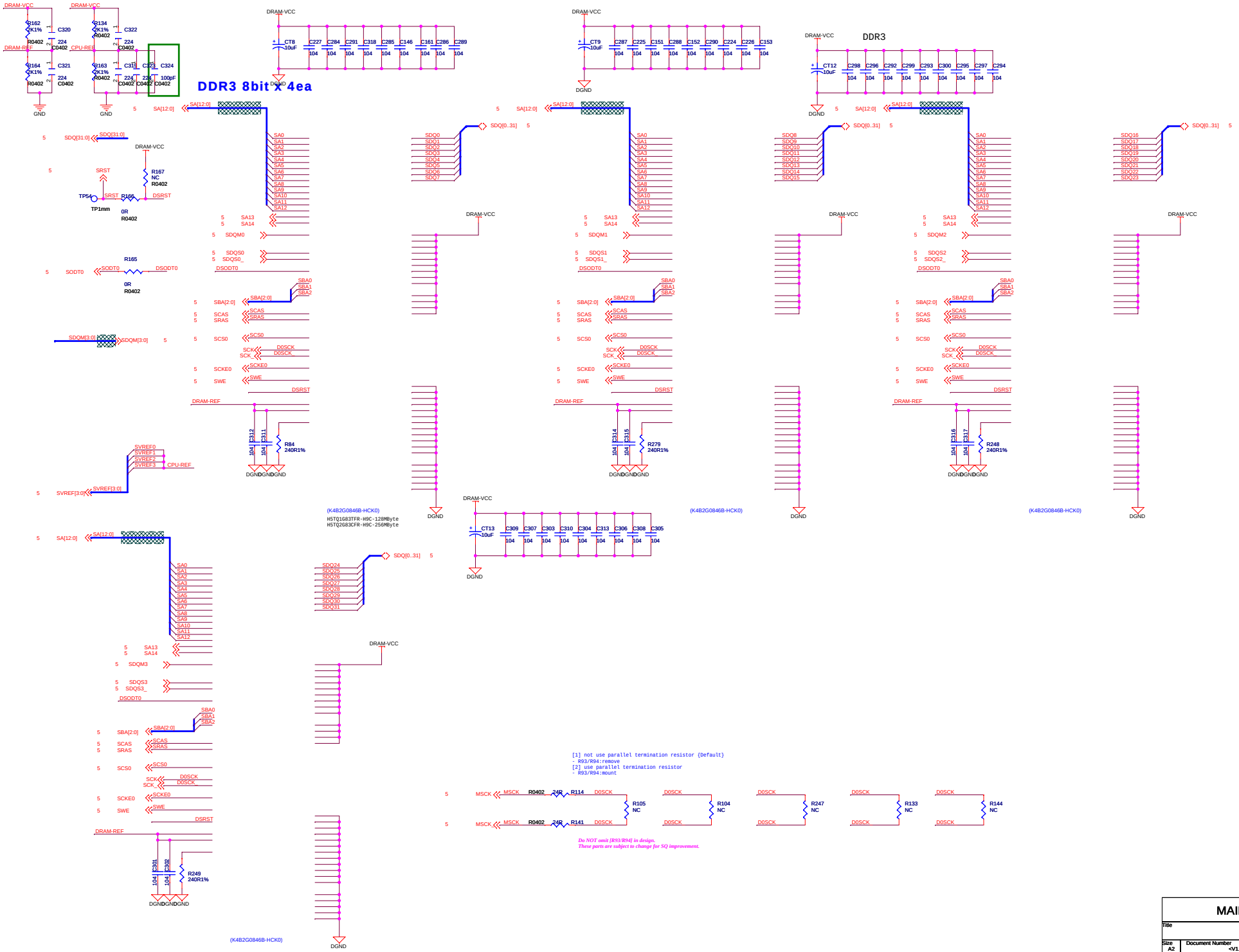

Title	MAINCHIP_PAD_DDR3
Size A2	Document Number <V1.0>
Rev	
Date: Wednesday, March 07, 2012	Sheet 14 of 16

NAND Flash

TSOP-48 Nand

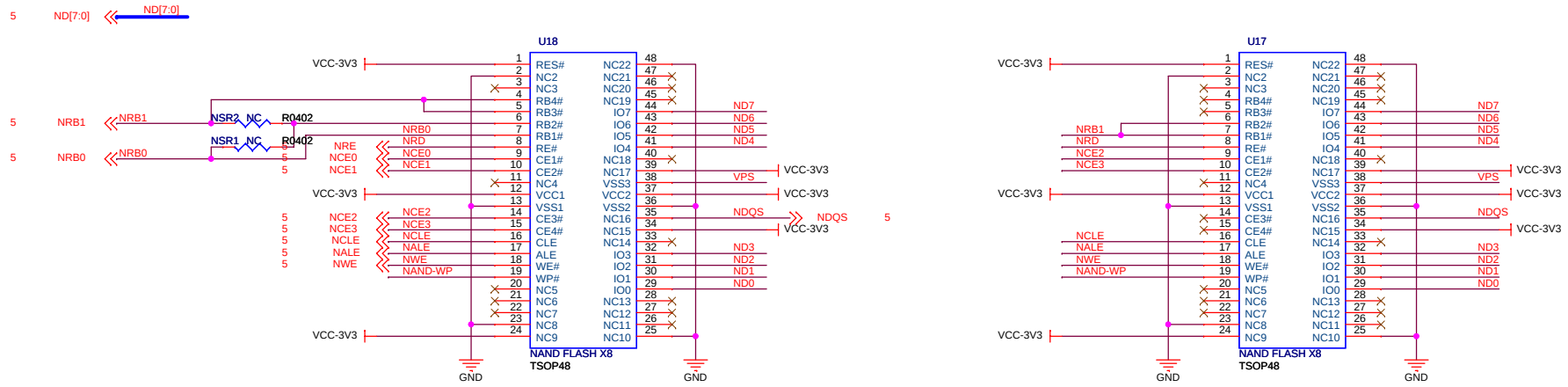

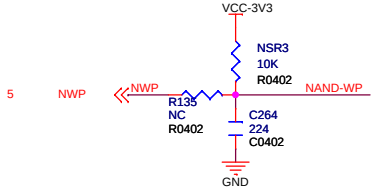

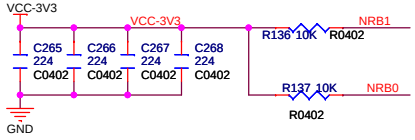

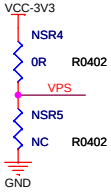

pack ok

(1) 接1片单片选Nand 时，NSR2、NSR1断开
(2) 接1片双片选Nand 时，连接NSR2，断开NSR1
(3) 接1片四片选Nand 时，连接NSR1，断开NSR2
(4) 接2片单片选或接2片双片选Nand时，连接NSR1，断开NSR2
(5) 接Intel、Toshiba、Samsung 2xnm TSOP Nand时， NSR4连接，NSR5断开；其它的NSR4断开，NSR5连接

MAINCHIP_PAD_DDR3		
Title: NAND Flash		
Size: A3	Document Number: <V1.0>	Rev
Date: Wednesday, March 07, 2012	Sheet 15 of 16	

WIFI-GSENSOR

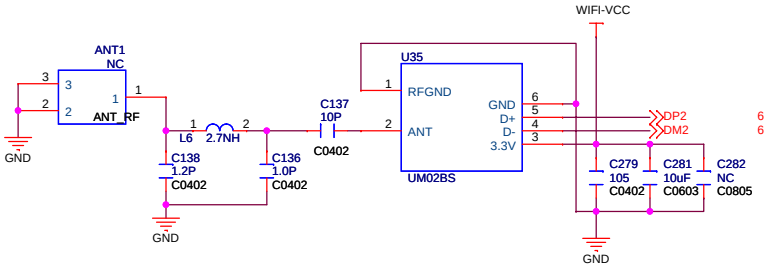

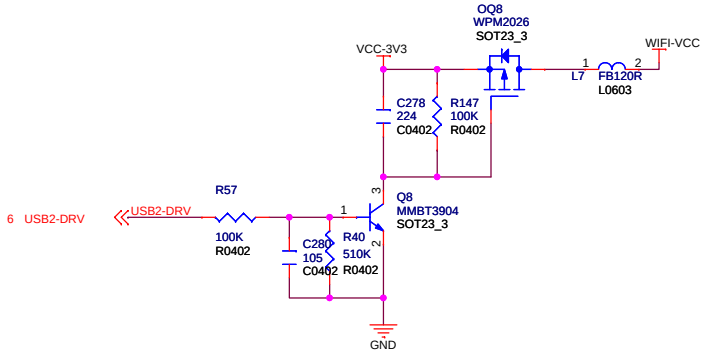

DEBUG

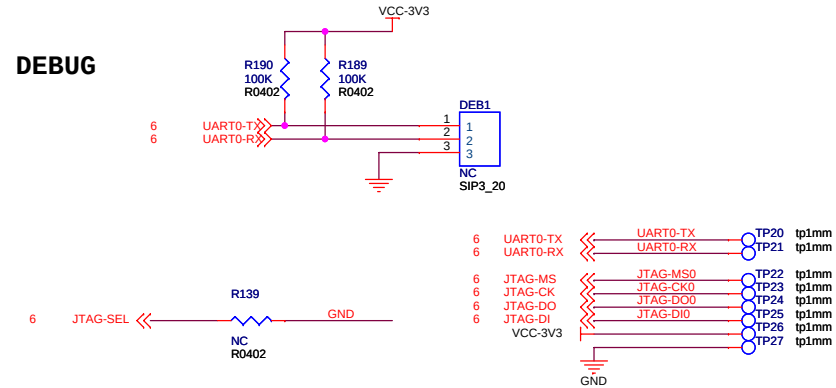

预留DEBUG测试点，以备调试使用

G-SENSOR

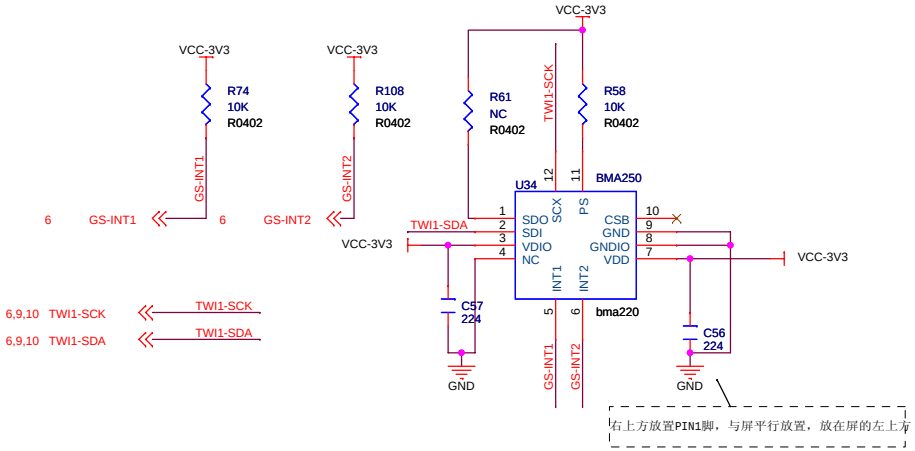

MAINCHIP_PAD_DDR3		
Title WIFI-GSENSOR		
Size A3	Document Number <V1.0>	Rev
Date: Wednesday, March 07, 2012	Sheet 16 of 16	