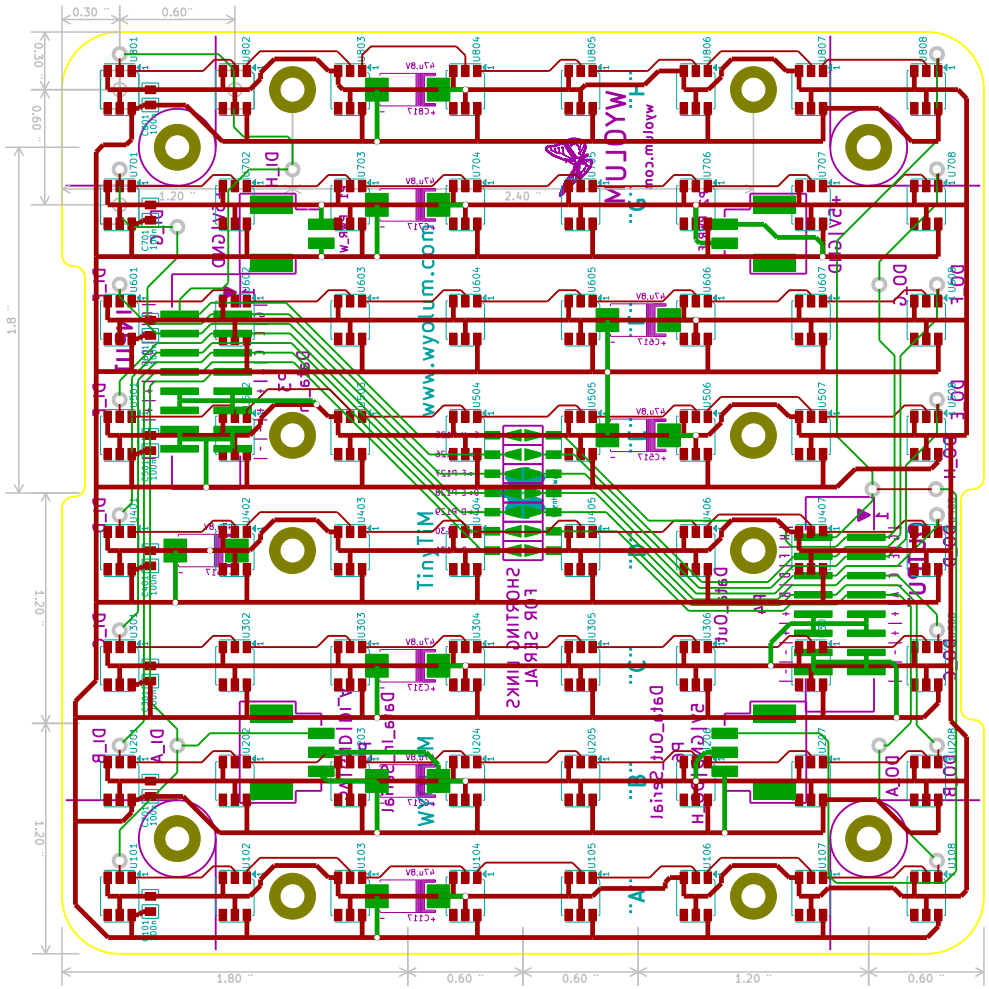

File: TinyTiM.kicad_pcb		
Sheet:		
Title:		
Size: A4	Date: 25 apr 2014	Rev:
KiCad E.D.A.		Id: 1/1