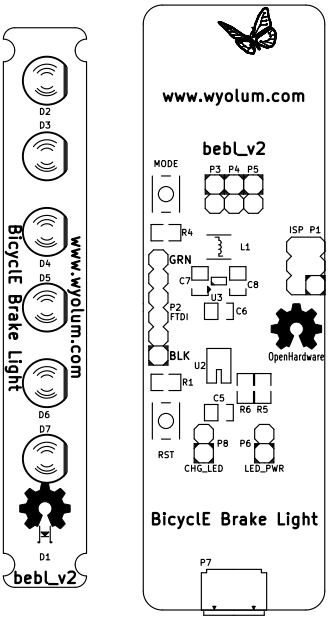
D2
D3
D4
D5
D6
D7
D1
BicyclE Brake Light
www.wyolum.com
bebl_v2
www.wyolum.com
bebl_v2
MODE
P3 P4 P5
R4
L1
ISP P1
GRN
C7
C8
U3
C6
P2
FTDI
OpenHardware
BLK
U2
R1
C5
R6 R5
RST
P8
P6
CHG_LED
LED_PWR
BicyclE Brake Light
P7