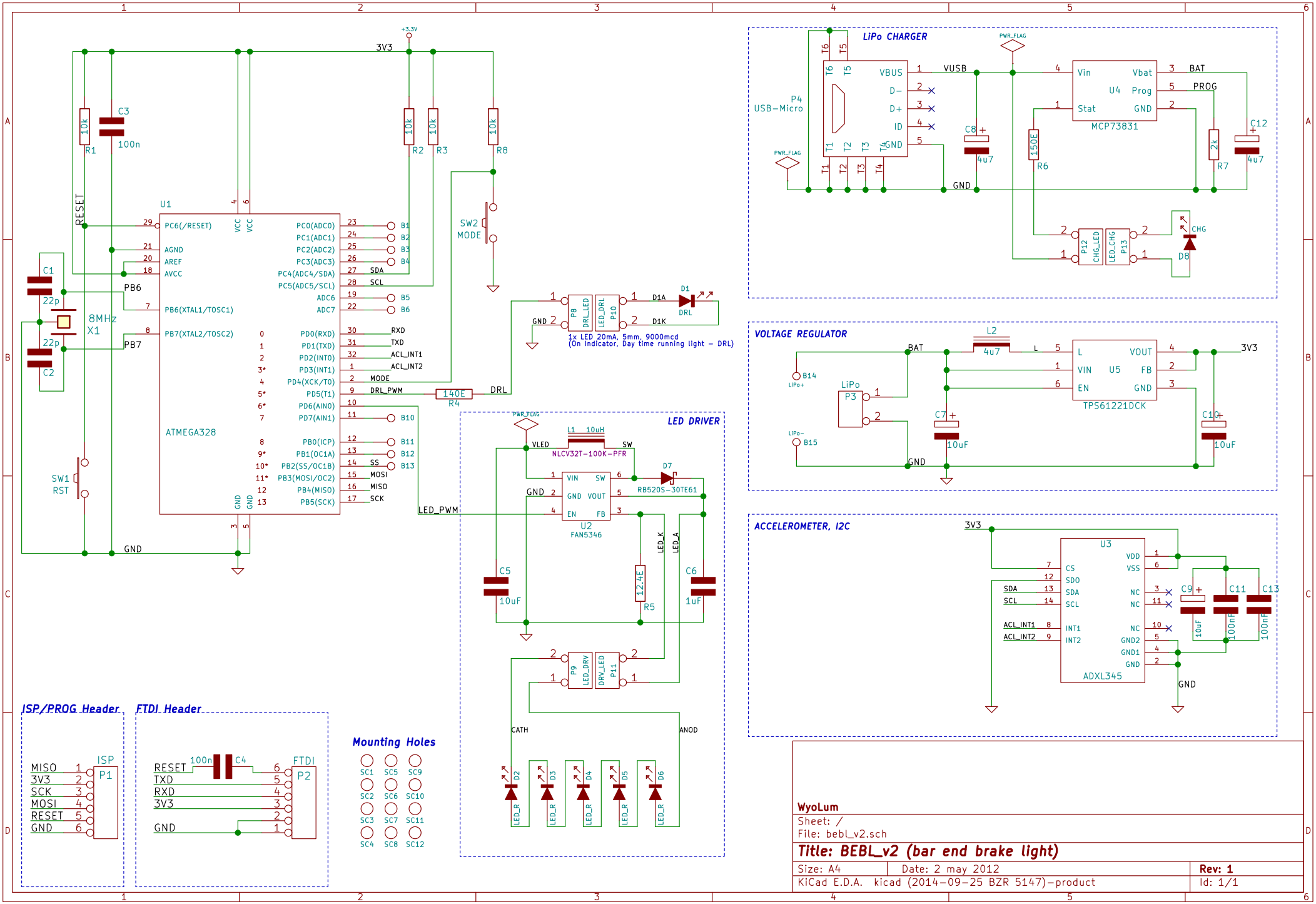

WyoLum

Sheet: /

File: bebl_v2.sch

Title: BEBL_v2 (bar end brake light)

Size: A4	Date: 2 may 2012	Rev: 1
KiCad E.D.A. kicad (2014-09-25 BZR 5147)-product		Id: 1/1