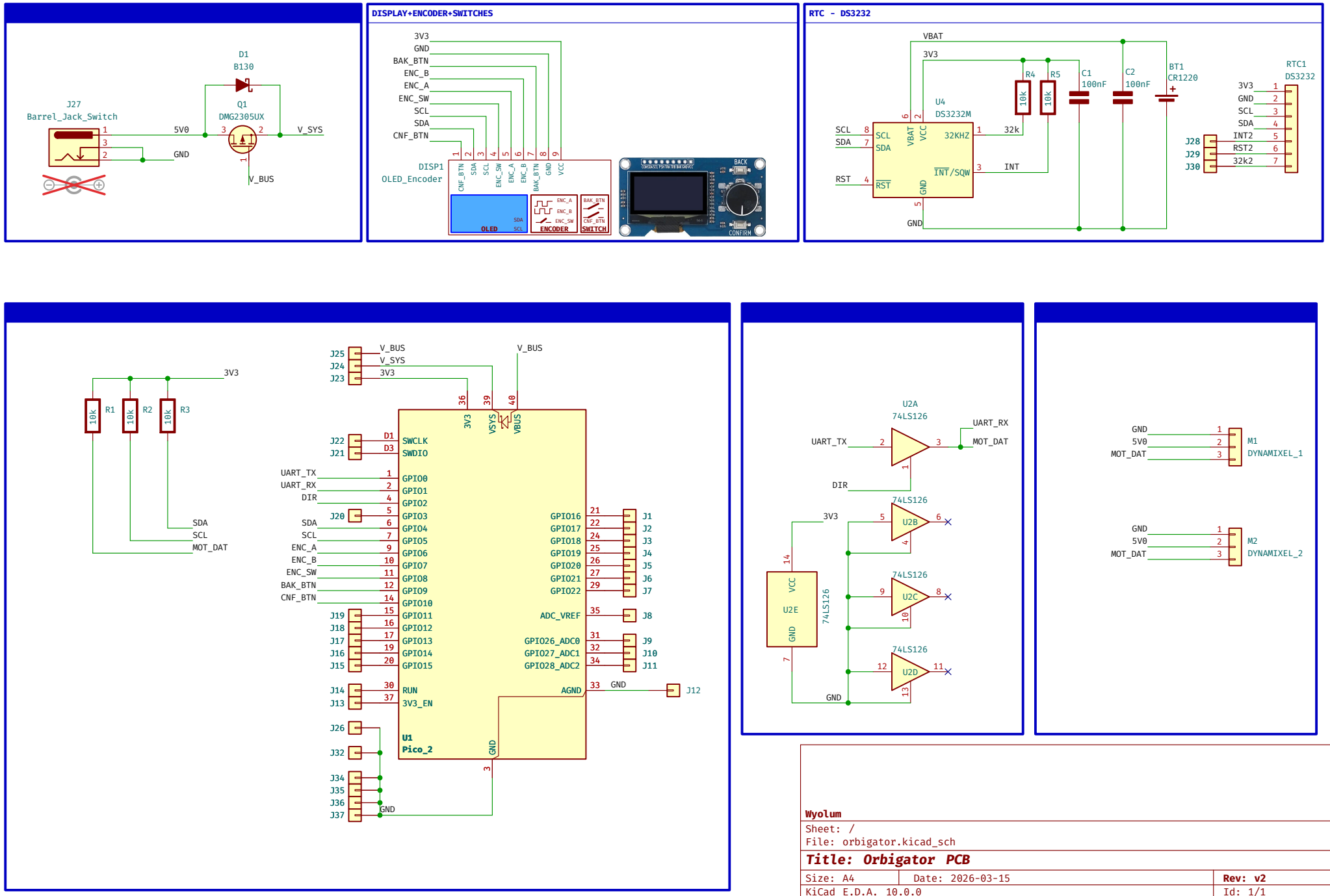

Wyolum

Sheet: /

File: orbigator.kicad_sch

Title: Orbigator PCB

Size: A4	Date: 2026-03-15	**Rev: v2**
KiCad E.D.A. 10.0.0		Id: 1/1