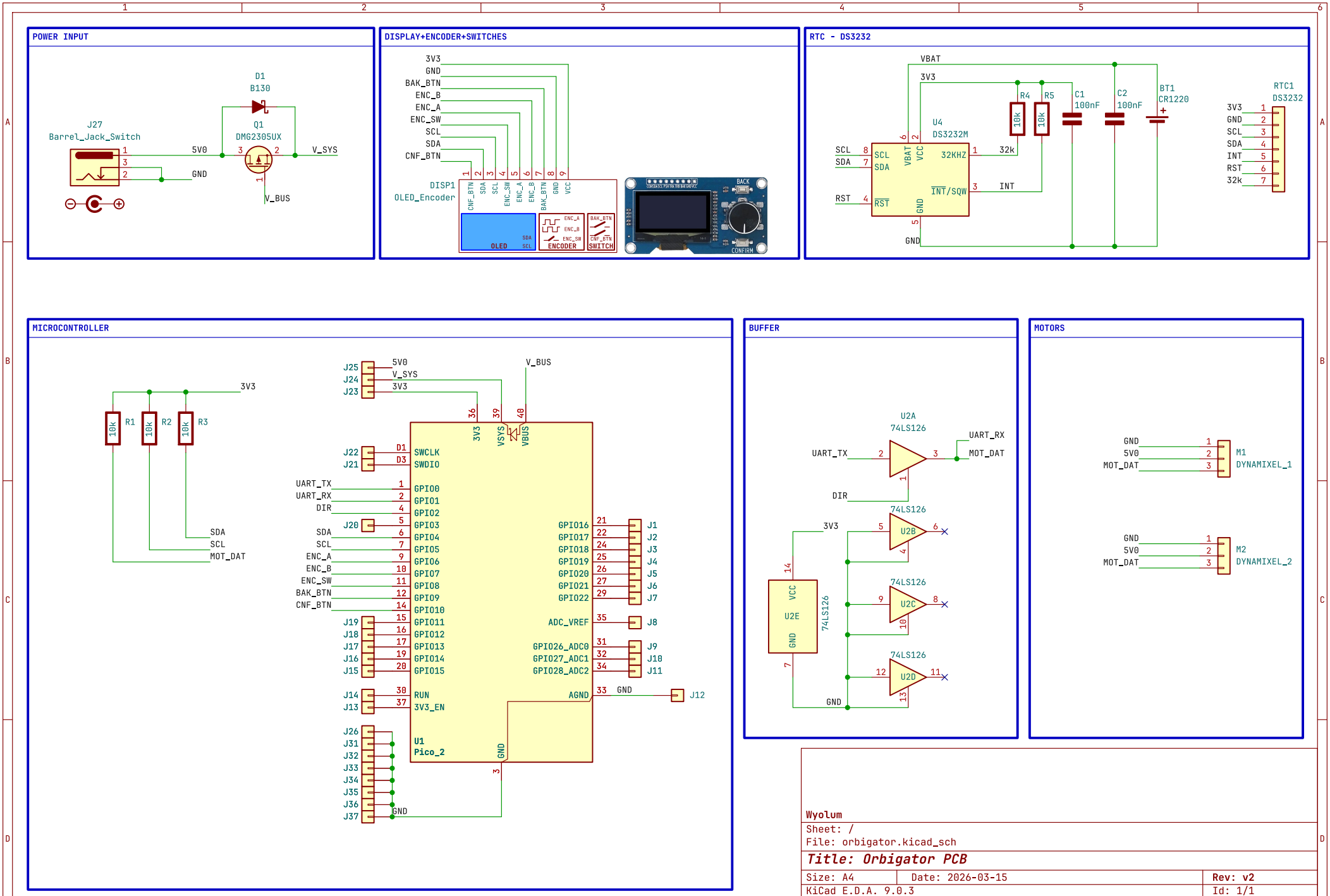

Wyolum
Sheet: /
File: orbigator.kicad_sch

Title: Orbigator PCB

Size: A4	Date: 2026-03-15	Rev: v2
KiCad E.D.A. 9.0.3		Id: 1/1