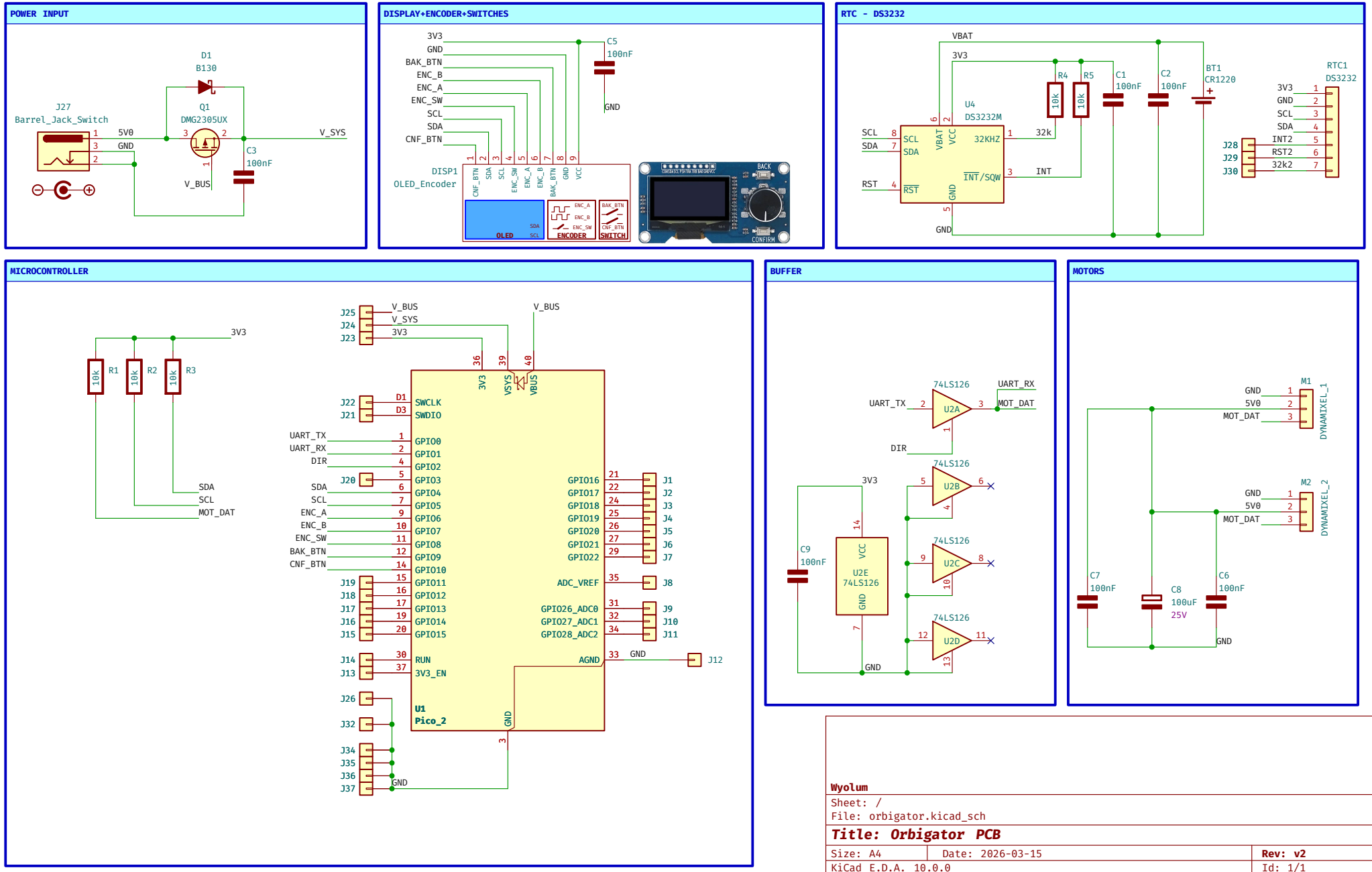
POWER INPUT
D1
B130
J27
Barrel_Jack_Switch
Q1
DMG2305UX
5V0
GND
V_SYS
C3
100nF
V_BUS
DISPLAY+ENCODER+SWITCHES
3V3
GND
BAK_BTN
ENC_B
ENC_A
ENC_SW
SCL
SDA
CNF_BTN
C5
100nF
DISP1
OLED_Encoder
OLED
ENCODER
SWITCH
RTC - DS3232
VBAT
3V3
R4
R5
10k
C1
100nF
C2
100nF
BT1
CR1220
U4
DS3232M
32KHZ
32k
INT
INT/SQW
RST
RTC1
DS3232
INT2
RST2
32k2
J28
J29
J30
MICROCONTROLLER
R1
R2
R3
MOT_DAT
V_BUS
V_SYS
U1
Pico_2
SWCLK
SWDIO
GPIO0
GPIO1
GPIO2
GPIO3
GPIO4
GPIO5
GPIO6
GPIO7
GPIO8
GPIO9
GPIO10
GPIO11
GPIO12
GPIO13
GPIO14
GPIO15
RUN
3V3_EN
GPIO16
GPIO17
GPIO18
GPIO19
GPIO20
GPIO21
GPIO22
ADC_VREF
GPIO26_ADC0
GPIO27_ADC1
GPIO28_ADC2
AGND
BUFFER
74LS126
U2A
U2B
U2C
U2D
U2E
UART_TX
UART_RX
DIR
C9
100nF
MOTORS
M1
M2
DYNAMIXEL_1
DYNAMIXEL_2
C7
100nF
C8
100uF
25V
C6
100nF
Wyolum
Sheet: /
File: orbigator.kicad_sch
Title: Orbigator PCB
Size: A4
Date: 2026-03-15
Rev: v2
KiCad E.D.A. 10.0.0
Id: 1/1